ICOM

SERVICE MANUAL

COMMUNICATIONS RECEIVER

IC-R10

Icom Inc.

INTRODUCTION

This service manual describes the latest information for the IC-R10 at the time of publication.

MODEL	VERSION	SYMBOL
IC-R10	U.S.A.	USA
	France	FRA
	U.K.	UK
	Europe	EUR

DANGER

NEVER connect the receiver to an AC outlet or to a DC power supply that uses more than 16 V. Such a connection could cause a fire hazard and/or electric shock.

DO NOT expose the receiver to rain, snow or any liquids.

DO NOT reverse the polarities of the power supply when connecting the receiver.

DO NOT apply an RF signal of more than 20 dBm (100 mW) to the antenna connector. This could damage the receiver's front end.

ORDERING PARTS

Be sure to include the following four points when ordering replacement parts:

1. 10-digit order numbers
2. Component part number and name
3. Equipment model name and unit name
4. Quantity required

<SAMPLE ORDER>

1110001810	S.IC	TA7368F	IC-R10	MAIN UNIT	1 piece
8810009560	Screw	FH M2 x 6 ZK (BT)	IC-R10	CHASSIS	7 pieces

Addresses are provided on the inside back cover for your convenience.

REPAIR NOTES

1. Make sure a problem is internal before disassembling the receiver.
2. **DO NOT** open the receiver until the receiver is disconnected from its power source.
3. **DO NOT** force any of the variable components. Turn them slowly and smoothly.
4. **DO NOT** short any circuits or electronic parts. An insulated tuning tool **MUST** be used for all adjustments.
5. **DO NOT** keep power ON for a long time when the receiver is defective.
6. **READ** the instructions of test equipment thoroughly before connecting equipment to the receiver.

TABLE OF CONTENTS

SECTION 1 SPECIFICATIONS

SECTION 2 INSIDE VIEWS

SECTION 3 DISASSEMBLY INSTRUCTIONS

SECTION 4 CIRCUIT DESCRIPTION

4 - 1 RECEIVER CIRCUITS ..... 4 – 1
4 - 2 PLL CIRCUITS ..... 4 – 4
4 - 3 POWER SUPPLY CIRCUITS ..... 4 – 5
4 - 4 CPU PORT ALLOCATIONS ..... 4 – 6

SECTION 5 ADJUSTMENT PROCEDURES

5 - 1 PLL AND BFO ADJUSTMENT ..... 5 – 1
5 - 2 COMMAND ADJUSTMENT (ADJUSTMENT SET MODE) ..... 5 – 3

SECTION 6 PARTS LIST

SECTION 7 MECHANICAL PARTS AND DISASSEMBLY

SECTION 8 SEMI-CONDUCTOR INFORMATION

SECTION 9 BOARD LAYOUTS

SECTION 10 BLOCK DIAGRAM

SECTION 11 VOLTAGE DIAGRAM

SECTION 1 SPECIFICATIONS

■ GENERAL

• Frequency range :

VERSION	FREQUENCY RANGE
Europe, U.K.	500 kHz–1300 MHz
France	500 kHz–87.5 MHz 108 MHz–1300 MHz
U.S.A.	500 kHz–823.9999 MHz 849.0001–868.9999 MHz 894.0001–1300 MHz

• Mode : FM, WFM, AM, USB, LSB, CW

• Tuning steps : 0.1, 0.5, 1, 5, 6.25, 8, 9, 10, 12.5, 15, 20, 25, 30, 50, 100 kHz or user-programmable (0.1–999.9 kHz/0.1 kHz steps)

• Power supply requirement : 4.8 V DC (4 AA (R6) Ni-Cd cells); or, 4.8–16 V DC acceptable (negative ground)

• Current drain (at 13.5 V DC) : Rated audio 180 mA typ.
Standby 110 mA typ.
Power saved 38 mA typ.

• Usable temperature range : –10°C to +50°C; +14°F to +122°F

• Antenna connector : BNC (50 Ω)

• Scan speed : 16.7 ch/sec. (programmed scan), 6.25 ch/sec. (memory scan)

• CI-V connector : 3-conductor 3.5 (d) mm (1/8")

• Dimensions (projections not included): 58.5 (W) × 130 (H) × 31.3 (D) mm; 2.3 (W) × 5.1 (H) × 1.2 (D) in

• Weight : 310 g; 10.9 oz.

■ RECEIVER

• Receive system : Triple-conversion superheterodyne

• Intermediate freq. : 1st 266.7 MHz (340.0000–999.9999 MHz)
429.1 MHz (except above freq.)
2nd 10.7 MHz
3rd 455 kHz

• Sensitivity (typical, except spurious points) :

FREQUENCY (MHz)	FM	WFM	AM	SSB/CW
0.5 – 4.9999	0.50 μV	—	1.6 μV	0.40 μV
5.0 – 74.9999	0.32 μV	—	1.0 μV	0.25 μV
75.0 – 199.9999		1.0 μV		
200.0 – 339.9999	0.45 μV	2.2 μV	1.6 μV	0.40 μV
340.0 – 699.9999	0.35 μV	1.3 μV	1.4 μV	0.32 μV
700.0 – 799.9999	0.79 μV	2.0 μV	2.0 μV	0.63 μV
800.0 – 899.9999	0.50 μV	1.6 μV	1.6 μV	0.40 μV
900.0 –1300.0000		—		

*FM and WFM are measured at 12 dB SINAD; AM, SSB and CW are measured at 10 dB S/N.

• Squelch sensitivity (at threshold) :

FREQUENCY (MHz)	FM	WFM	AM
0.5 – 4.9999	0.50 μV	—	1.6 μV
5.0 – 74.9999	0.32 μV	—	1.0 μV
75.0 – 199.9999		1.0 μV	
200.0 – 339.9999	0.45 μV	2.2 μV	1.6 μV
340.0 – 699.9999	0.35 μV	1.3 μV	1.4 μV
700.0 – 799.9999	0.79 μV	2.0 μV	2.0 μV
800.0 – 899.9999	0.50 μV	1.6 μV	1.6 μV
900.0 –1300.0000		—	

• Selectivity : SSB, CW More than 4 kHz /6 dB
AM, FM More than 15 kHz/6 dB
WFM More than 150 kHz/6 dB

• Audio output power (at 13.5 V DC) : More than 120 mW at 10% distortion with an 8 Ω load

• External speaker connector : 3-conductor 3.5 (d) mm (1/8")/8 Ω

SECTION 2 INSIDE VIEWS

• MAIN unit

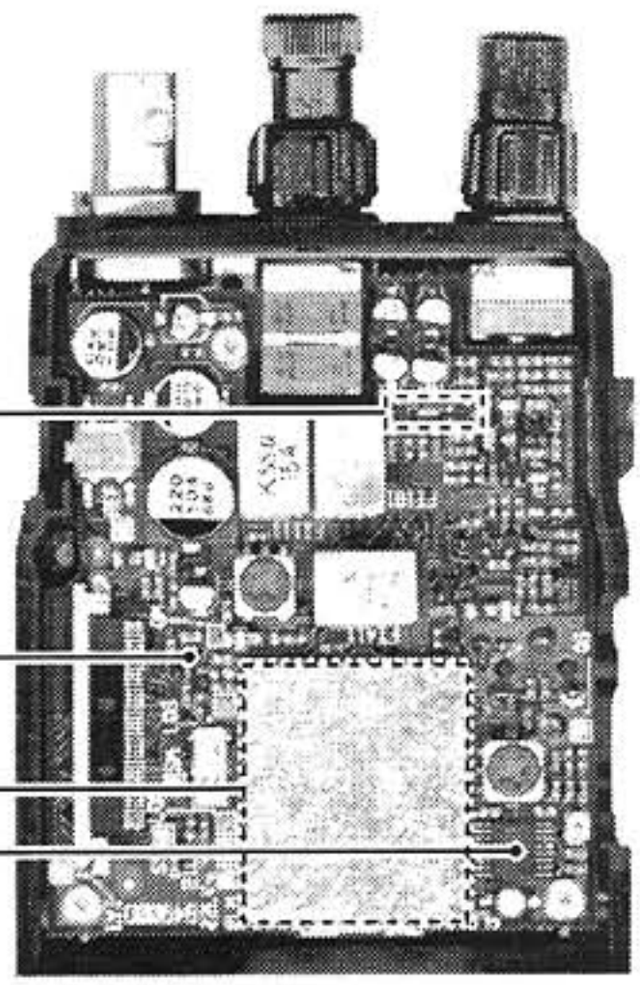

Top view

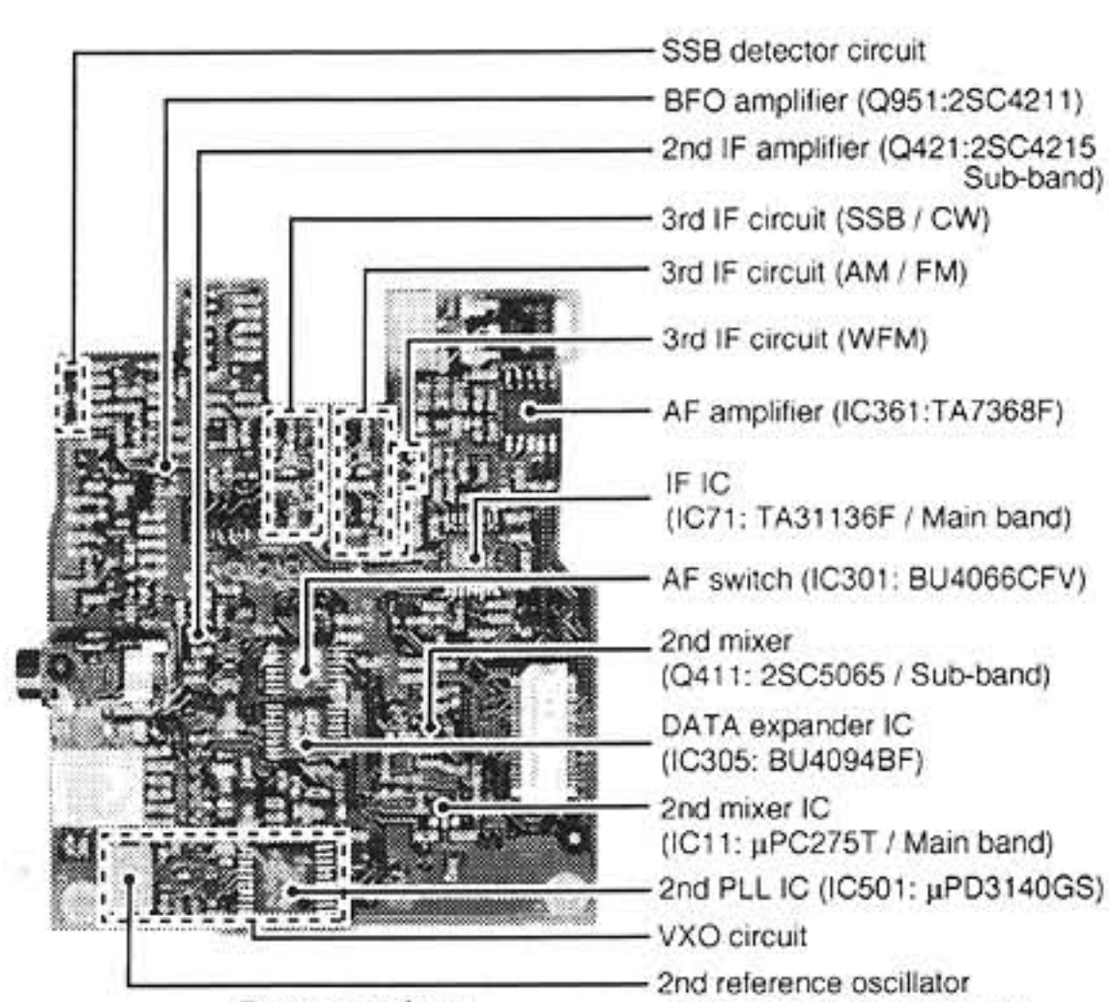

Bottom view

• RF unit

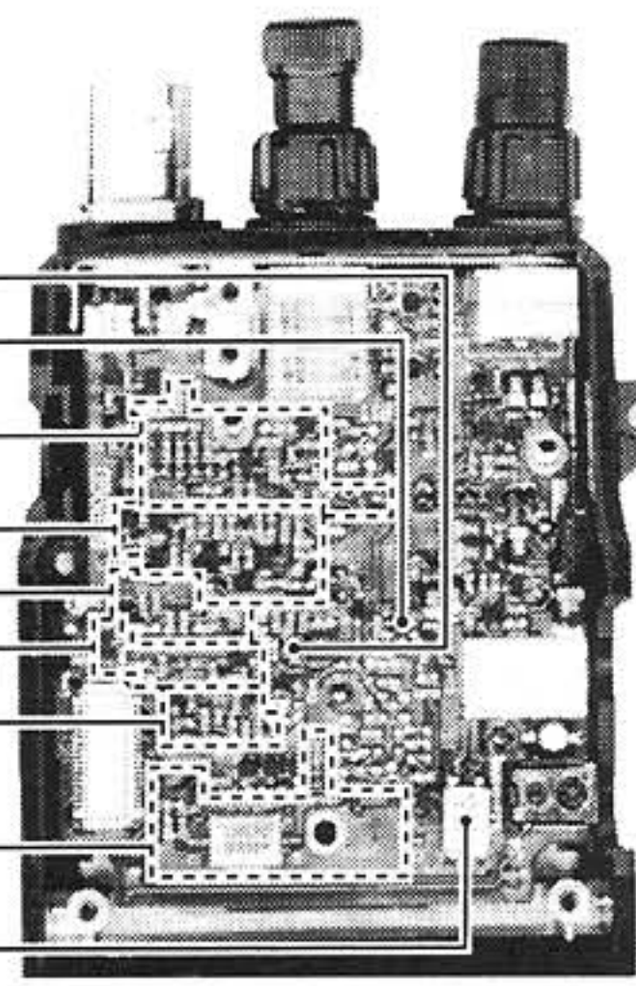

Top view

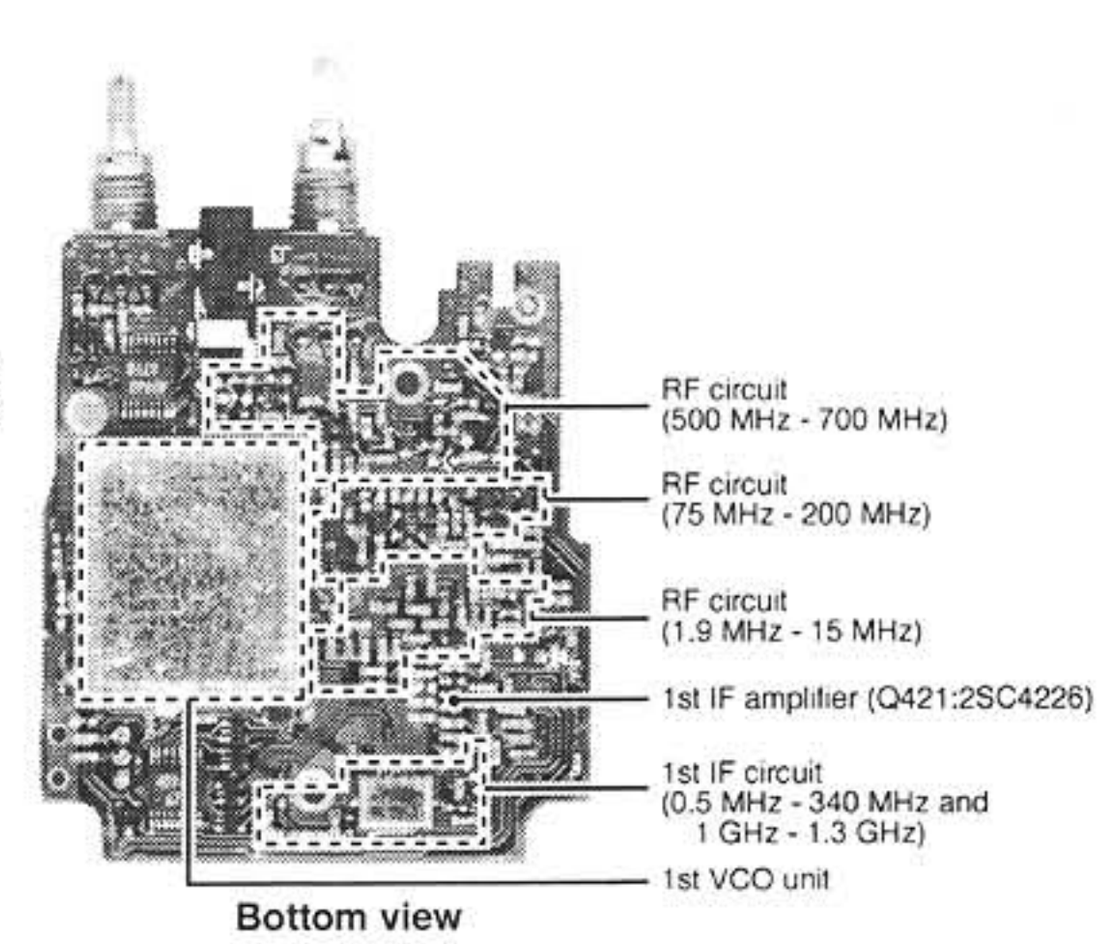

Bottom view

• LOGIC unit

Bottom view

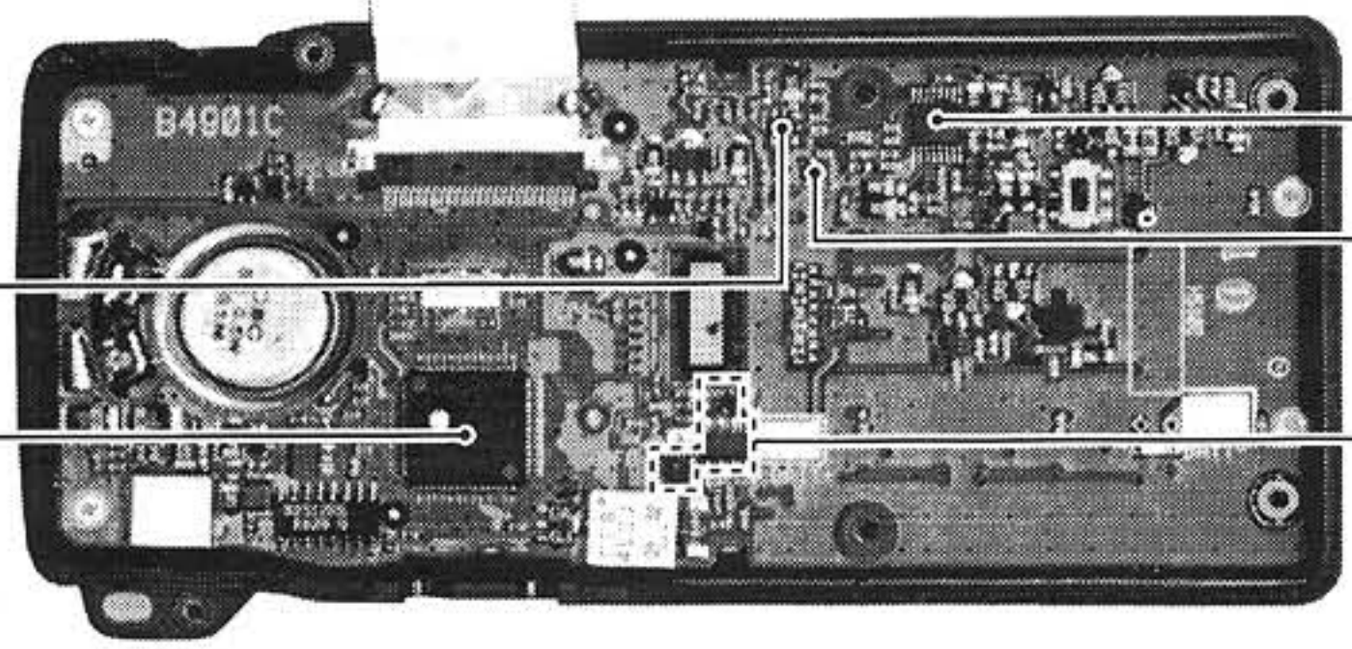

SECTION 3 DISASSEMBLY INSTRUCTIONS

• Opening the case

① Remove the SP cap, ❶.

② Unscrew 6 screws, ❷ and ❸ to open the case.

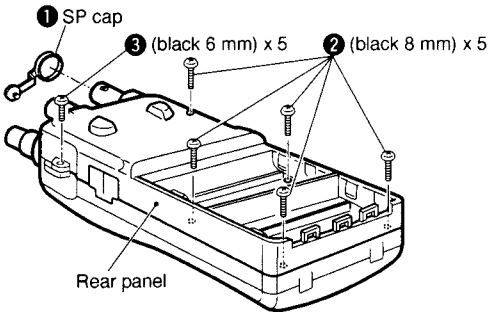

• Removing the LOGIC unit

① Unplug J1 to separate the front panel and rear panel.

② Unsolder 2 points ❹ and unscrew 4 screws ❺ .

③ Remove the LOGIC unit in the direction of the arrow.

※Be careful when pulling, pull up, LCD components are on the opposite side.

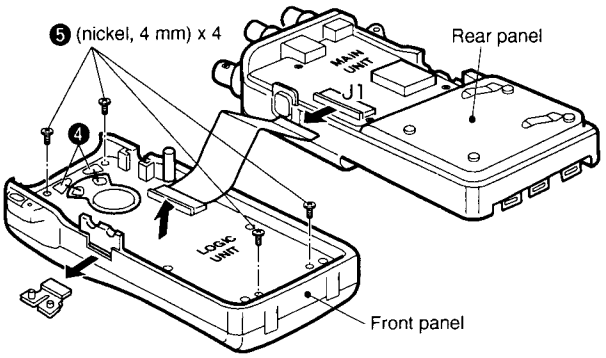

• Removing the MAIN unit

① Unscrew 3 screws ❻.

② Remove the MAIN unit in the direction of the arrow.

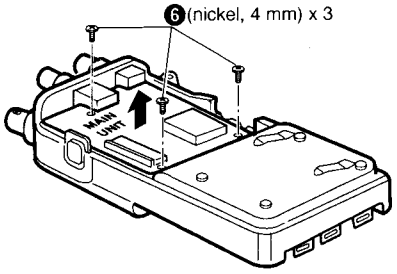

• Removing the RF unit

① Remove 3 knobs ❼ and unscrew 3 nuts ❽.

② Unsolder 4 points ❾ and unscrew 3 screws ❿.

③ Remove the RF unit in the direction of the arrow.

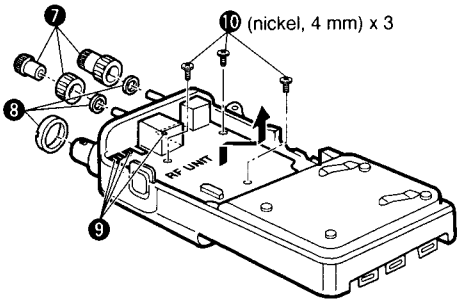

Note

※When pulling the terminals, the ⊖ side of each terminals has a piece of rubber affixed.

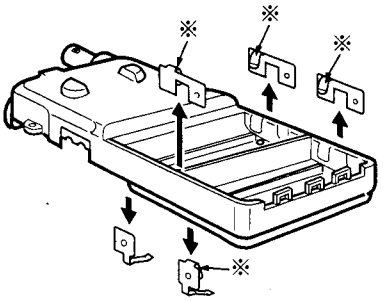

SECTION 4 CIRCUIT DESCRIPTION

4-1 RECEIVER CIRCUITS

4-1-1 ANTENNA SWITCHING CIRCUIT (RF UNIT)

Received signals enter the RF unit from the antenna connector (J1) and pass through a limiter (D1) and an attenuator circuit (D2). The signals are then applied to the RF circuit via the antenna switching circuit (D51, D151, D171, D211, D231) which suppress out-of-band signals.

4-1-2 RF CIRCUIT (RF UNIT)

The RF circuit amplifies the received signals within the range of frequency coverage and filters out-of-band signals.

(1) 0.5 MHz–74.9999 MHz signals

RF signals (0.5 MHz–74.9999 MHz) from an antenna switching circuit (D51) pass through a low-pass filter (L51, L52). The filtered signals are amplified at an RF amplifier (Q51) through each bandpass filter depending on the receiving frequency. The amplified signals are then applied to the 1st mixer circuit (IC271) through the band switching diode (D253).

The signals below 1.9 MHz pass through a low-pass filter (L55, L56) via the band switching diode (D52), and are then applied to the RF amplifier circuit (Q51) via the band switching diode (D53).

The 1.9 MHz–29.9999 MHz signals pass through the band switching diode (D61) and low-pass filter (L61, L62). The 1.9 MHz–14.9999 MHz signals pass through the band switching diode (D81) and bandpass filter (L82, L83, L91, L92), and are then applied to the RF amplifier circuit (Q51) via the band switching diode (D82).

The 15.0 MHz–29.9999 MHz signals pass through the band switching diode (D101) and high-pass filter (L102, L103) and are then applied to the RF amplifier circuit (Q51) via the band switching diode (D102).

The 30.0 MHz–74.9999 MHz signals pass through the band switching diode (D121) and high-pass filter (L122, L123), and are then applied to the RF amplifier circuit (Q51) via the band switching diode (D122).

(2) 75.0 MHz–199.9999 MHz

The 75.0 MHz–199.9999 MHz signals pass through the tunable bandpass filter (D152, L152) via the band switching diode (D151), and are then amplified at the RF amplifier (Q151) and pass through another tunable bandpass filter (D153, L155). The filtered signals are applied to the 1st mixer circuit (IC271) via the band switching diode (D154).

(3) 200.0 MHz–499.9999 MHz

The 200.0 MHz–499.9999 MHz signals pass through the tunable bandpass filter (D172, L172) via the band switching diode (D171), and are then amplified at the RF amplifier (Q171) and pass through another tunable bandpass filter (D173, L175). The filtered signals are applied to the 1st mixer circuit (IC271) via the band switching diode (D174).

(4) 500.0 MHz–699.9999 MHz

The 500.0 MHz–699.9999 MHz signals pass through a tunable band pass filter (D213, L213, L214) via the band switching diode (D211), and are then amplified at an RF amplifier (Q211) and pass through another tunable bandpass filter (D214, L216, L217). The filtered signals are applied to the 1st mixer circuit (IC271) via the band switching diode (D154).

(5) 700.0 MHz–1300.0000 MHz

The 700.0 MHz–1300 MHz signals pass through a high-pass filter (L232, L233) via the band switching diode (D231), and are then amplified at the RF amplifier (Q231) and pass through a tunable bandpass filter (D238, L240). The filtered signals are applied to the 1st mixer circuit (IC271) via the band switching diode (D236).

• RF filters

Receive frequency [MHz]	SW diodes	BPF select signal	Components
0.5 – 1.8999	D52, D53	B0	L55, L56
1.9 – 14.9999	D81, D82	B1	L82, L83, L91, L92
15.0 – 29.9999	D101, D102	B2	L102, L103
30.0 – 74.9999	D121, D122	B3	L122, L123

• Tunable band pass filters and RF amplifiers

Receive frequency [MHz]	BPF select signal	Varactor diodes	RF amplifier
75.0 – 199.9999	B4	D152, D153	Q151
200.0 – 499.9999	B5	D172, D173	Q171
500.0 – 699.9999	B6	D213, D214	Q211
700.0 – 1300.0000	B7	D238	Q231

• RF filter and amplifier circuits

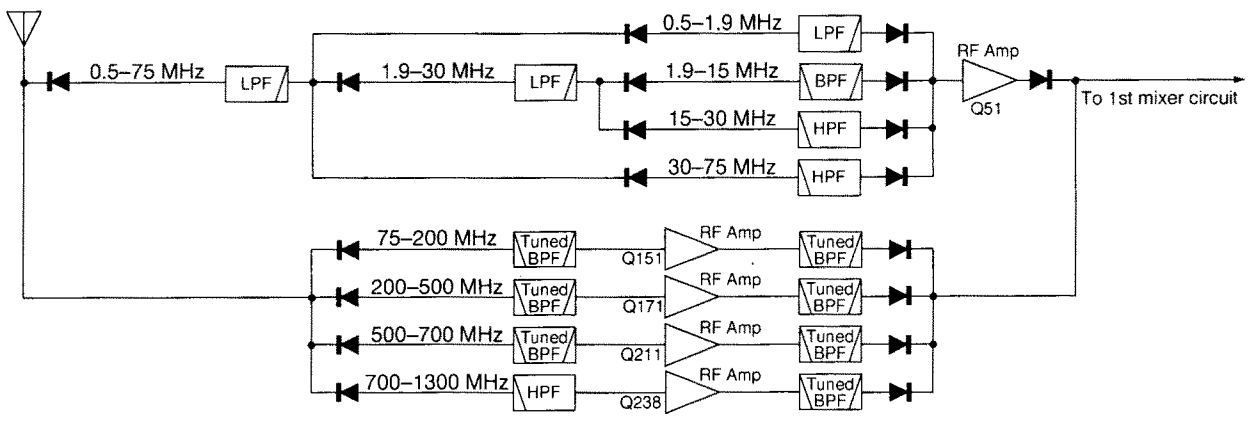

D152, D153, D172, D173, D213, D214 and D238 employ varactor diodes that are controlled by the CPU (LOGIC unit; IC1) to track the bandpass filter. These varactor diodes tune the center frequency of an RF passband for wide width receiving and good image response rejection.

4-1-3 1ST MIXER AND 1ST IF CIRCUITS (RF UNIT)

The 1st mixer circuit converts the received RF signals to a fixed frequency of the 1st IF signal with the PLL output frequency. By changing the PLL frequency, only the desired frequency will pass through the band pass filters at the next stage of the 1st mixer.

The amplified signals are mixed with 1st LO signals from the 1st VCO unit at a 1st mixer (IC271) to produce 1st IF signals (266.7 MHz; 340.0 MHz–999.9999 MHz, 429.1 MHz; 0.5 MHz–339.9999 MHz and 1.0 GHz–1.3 GHz).

The 1st IF signals are applied to each IF filter (FI401 for 266.7 MHz IF signal, FI411 for 429.1 MHz IF signal) to suppress out-of-band signals. The 1st IF signals are amplified at the 1st IF amplifier (Q421) and then applied to the 2nd mixer on the MAIN unit.

• 1st LO frequency and 1st IF frequency

Receive frequency [MHz]	1st LO frequency [MHz]	1st IF frequency [MHz]
0.5 – 339.9999	429.6 – 769.0999	429.1
340.0 – 609.9999	606.7 – 876.6999	266.7
610.0 – 999.9999	343.3 – 733.2999	266.7
1000.0 – 1300.0000	733.3 – 870.9000	429.1

4-1-4 2ND MIXER AND 2ND IF CIRCUIT (MAIN UNIT)

The 2nd mixer circuit converts the 1st IF signal to a 2nd IF signal.

The 1st IF signals (266.7 MHz or 429.1 MHz) from the RF unit are applied to the 2nd mixer circuit (IC11) for mixing with the 2nd LO signals to be converted into a 10.7 MHz 2nd IF signal. The 2nd IF signal is applied to the IF filter (FI11) to suppress out-of-band signals, and is then amplified at the 2nd IF amplifier (Q21).

4-1-5 3RD IF AND DEMODULATOR CIRCUIT (MAIN UNIT)

The 3rd mixer circuit converts the 2nd IF signal to a 3rd IF signal.

IC71 contains the 3rd mixer, limiter amplifier, quadrature detector, s-meter detector and noise detector circuits.

The 2nd IF signal (10.7 MHz) from the 2nd IF amplifier (Q21) is applied to the 3rd mixer section of IF IC (IC71, pin 16) and is then mixed with a 10.245 MHz 3rd LO signal generated by X501 on the RF unit for conversion to a 455 kHz 3rd IF signal. The 3rd IF signal is demodulated at each demodulator circuit.

(1) FM

The 3rd IF signal from the 3rd mixer (IC71, pin 3) passes through the ceramic filter (FI111) to suppress unwanted heterodyned frequency signals. It is fed back to IC71, then amplified at the limiter amplifier section (pin 5) and applied to the quadrature detector section (pin 10) to demodulate the 3rd IF signal into AF signals. The AF signals are output from pin 9 and passed through the de-emphasis circuit (R79, C86) with frequency characteristics of –6 dB/octave, and then applied to the AF switch (IC301c, pin 4).

A portion of the AF signals from pin 9 (IC71) passes through the low-pass filter (R78, C84) and is applied to the CPU (LOGIC unit; IC1) as AFC control signals.

(2) WFM

The signal from the 3rd mixer is applied to the limiter amplifier section (IC71, pin 5). The amplified signals are demodulated at the quadrature detector section (IC71, pin 5). The AF signals are output from pin 9 (IC71) and are applied to the AF switch (IC301c, pin 4) the same as in FM mode.

By connecting R81 to R72 in parallel, the output characterstics of pin 12, "RSSI", change gradually. Therefore, the FM IF IC can detect WFM components.

(3) AM

The signal from the 3rd mixer passes through the ceramic filter (FI111) and is amplified at the 3rd IF amplifiers (Q151, Q161). The amplified signal is demodulated at the AM detector (Q171). The demodulated AF signals are applied to the AF switch (IC301d, pin 8) via the ANL control circuit (Q172).

• 2nd IF, 3rd IF and demodulator circuit

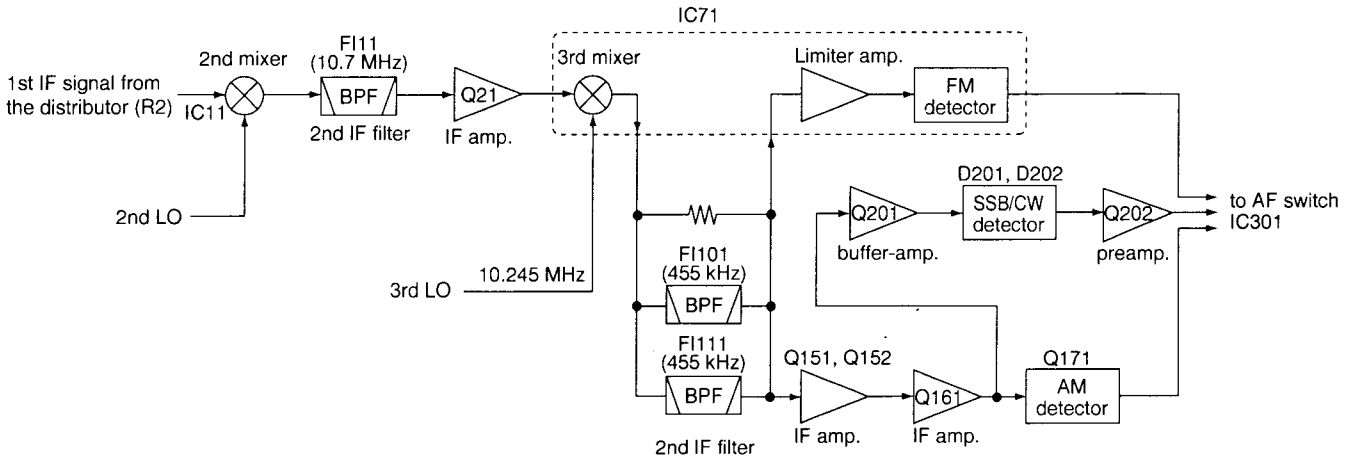

(4) SSB/CW

The signal from the 3rd mixer passes through the ceramic filter (FI101) and is amplified at the 3rd IF amplifiers (Q151, Q161) and buffer amplifier (Q201). The amplified signals are applied to the SSB/CW detector (D201, D202) and mixed with BFO signals from the BFO circuit (LOGIC unit; X231) via the BFO amplifier (Q951) to demodulate AF signals. The demodulated AF signals are applied to the AF switch (IC301b, pin 11) after being pre-amplified at the AF pre-amplifier (Q202).

• Bandpass filter selection

Mode(s)	Bandpass filter(s)	Passband width
NFM / AM	FI111	15 kHz
SSB / CW	FI101	4 kHz
WFM	—	—

4-1-6 SUB-BAND RECEIVER CIRCUIT (MAIN UNIT)

The sub-band receiver circuit is employed by the band scope and SIGNAVI functions.

A portion of the 1st IF signals from the RF unit is mixed with the sub 2nd LO signals at the 2nd mixer circuit (Q411) to be converted into 455 kHz sub 2nd IF signal. The 2nd IF signal is applied to the IF IC (IC471, pin 5) via the IF filter (FI411) and 2nd IF amplifier (Q421). The IF IC (IC471) outputs signals to lead the CPU (LOGIC unit; IC1) under conditions of RSSI or noise squelch.

4-1-7 AF AMPLIFIER CIRCUIT (MAIN UNIT)

The AF amplifier circuit amplifies the demodulated AF signals to drive a speaker.

The AF signals from the AF switch (IC301) are applied to the LOGIC unit through a "DETOM" line. The AF signals are amplified at the AF amplifier (LOGIC unit; Q950), and are then applied to the AF mute switch (LOGIC unit; IC950). The output signals from the AF mute switch (LOGIC unit; IC950) are applied to the [VOL] control (RF unit; R11), and are then power-amplified at the AF amplifier (MAIN unit; IC361, pin 4) to drive a speaker.

4-1-8 SQUELCH CIRCUIT (MAIN UNIT)

A noise squelch circuit cuts out AF signals when no RF signal is received. By detecting noise components in the AF signals, the CPU switches the AF mute switch.

Some of the noise components in the AF signals from IC71 (pin 9) are passed through the active filter (IC71, pins 8, 7), and then applied to the noise detector section. The squelch control pot (RF unit; R11) adjusts the input level of the active filter, and the level is used for the squelch threshold reference. The detected noise signals are applied to the CPU (LOGIC unit; IC1, pin 65) via the "SQL" line. The CPU then analyzes the noise condition and controls the "MUTE" port to cut off the AF signal using the AF mute switch (LOGIC unit; IC950).

4-1-9 VSC CIRCUIT (LOGIC UNIT)

The VSC (Voice Scan Control) detects AF signals and mutes undesired signals such as unmodulated, beat and noise component signals. When the VSC function is ON and an unmodulated signal is received, squelch functions the same as closed (no signal condition) even when it's open, or the scan function resumes for a short period on any scan setting during scanning.

A portion of the AF signals from the low-pass filter (Q950) is applied to the VSC control circuit (IC201) to detect demodulated signals while the VSC function is ON. When audio component signals are included in the AF signals, the VSC IC (IC201) outputs a low level signal from pin 13 to the CPU (IC1, pin 1) to release the mute switch (IC950).

4-1-10 BFO CIRCUIT (LOGIC UNIT)

The BFO (Beat Frequency Oscillator) circuit consists of X231, IC231 and D231. The oscillator provides a beat frequency signal (USB; 456.5 kHz, LSB; 453.5 kHz) to the SSB/CW detector circuit (MAIN unit; D201, D202) for demodulating the 3rd IF signal into AF signals.

The oscillating frequency for each mode (LSB/USB/CW) is switched by changing the capacitance of a varactor diode (D231). When USB mode is selected, the CPU (IC1, pin 3) outputs "LOW" level voltage to D231 to change the BFO frequency to 456.5 kHz.

• Squelch and AF amplifier circuits

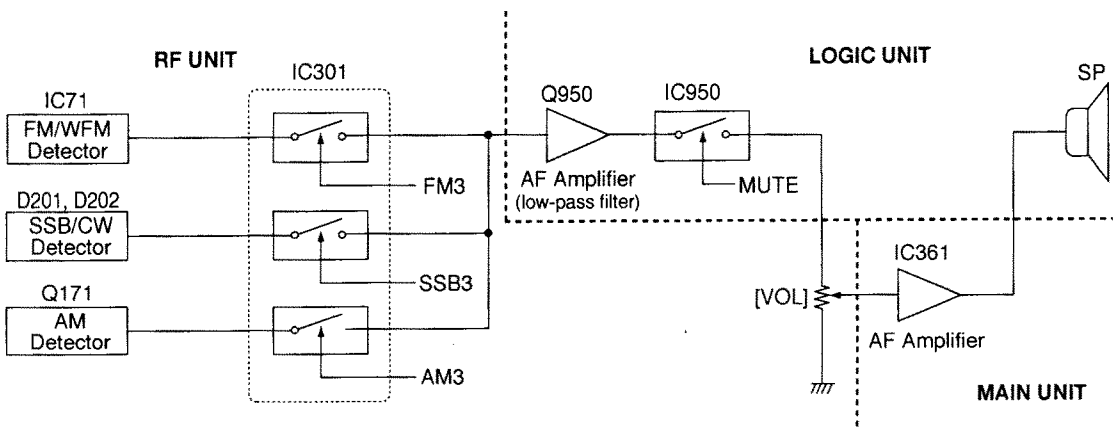

4-1-11 AGC CIRCUIT (MAIN UNIT)

The AGC (Auto Gain Control) circuit reduces IF/RF amplifier gain to keep the audio output at a constant level. The receiver gain is determined by the voltage on the IF-AGC line (Q182 collector) and RF-AGC line (RF unit; Q901 collector).

The 3rd IF signals from the 3rd IF amplifier (Q161) are detected at the AM detector (Q171). A portion of the detected signals is applied to the AGC amplifiers (Q182 and RF unit; Q901) as the AGC control voltage. The AM detector (Q171) is used for the AGC detector in the AGC circuit.

When receiving strong signals, the detected voltage increases and the AGC voltage decreases via the AGC amplifiers (Q182 and RF unit; Q901). As the AGC voltage is used for the bias voltage of the IF/RF amplifiers, IF/RF amplifier gain is decreased.

4-1-12 NOISE BLANKER CIRCUIT (MAIN UNIT)

The noise blanker circuit detects pulse-type noise, and stops IF amplifier operation during detection.

A portion of the 2nd IF signals from the 2nd IF amplifier for the sub-band (Q421) is amplified at the noise amplifier circuit (Q801, Q802). The amplified signal is recified at the noise detector circuit (Q805) for conversion into DC voltage. The DC voltage is applied to the NB control circuit (Q806, Q807) to control the NB switch (Q810).

Some DC voltage is fed back to the noise amplifier circuit (Q801, Q802) via the DC amplifier (Q808). The DC amplifier functions as an AGC circuit to reduce averaged noise. Therefore, the noise blanker function shuts off pulse-type noise only.

4-2 PLL CIRCUITS

4-2-1 GENERAL

1ST/2ND LO PLL circuits (RF/MAIN units) provide stable oscillation of the receive LO frequencies. The PLL circuit consists of the PLL IC (IC501 on the RF/MAIN units), charge pump, loop filter and reference oscillator and employs a pulse swallow counter.

4-2-2 1ST LO PLL CIRCUIT (RF UNIT)

Signals from the 1ST VCO unit pass through the buffer amplifier (Q551) and are prescaled in the PLL IC (IC501, pin 10) based on the divided ratio (N-data). The PLL IC detects the out-of-step phase using the reference frequency and outputs it from pin 6. The output signal is passed through the charge pump (Q521, Q522) and is applied to the loop filter (R527, C527) to be converted into DC voltage as a PLL lock voltage. The PLL lock voltage is applied to the 1ST VCO unit via the V1L line.

A portion of the signal from the loop filter (R527, C527) is amplified at the buffer amplifier (Q502) and is then applied to the CPU (LOGIC unit; IC1) as the lock voltage information (LVI). The CPU (pin 6) outputs a "TUNE" signal based on the lock voltage; the voltage is amplified at the buffer amplifiers (LOGIC unit; Q181, Q182) and is then applied to the RF unit as the tunable bandpass filter control signal (VTUNE). This signal (VTUNE) is used for the RF tunable bandpass filters to match the filter's center frequency to the desired receive frequency.

4-2-3 REFERENCE OSCILLATOR CIRCUIT (RF UNIT)

The reference oscillator circuit (X501, IC501) generates a 10.245 MHz reference frequency which is stabilized within the temperature range −10°C (+14°F) to +50°C (+122°F). The reference frequency is applied to the PLL IC and also applied to the MAIN unit as the 3rd LO signal via the buffer amplifier (Q531).

4-2-4 1ST VCO CIRCUIT (1ST VCO UNIT)

The 1ST VCO circuit contains three separate VCO circuits depending on the receive frequency. The oscillated signal at one of the three VCO circuits is applied to the buffer amplifier (Q601). The amplified signal is applied to the RF unit via the V1O line and is then applied to the 1st mixer circuit (RF unit; IC271, pin 3) as the 1st LO signal after being amplified at the buffer amplifier (RF unit; Q552).

A portion of the signal from the V1O terminal (1ST VCO unit; J601) is amplified at the buffer amplifier (Q551) and is then fed back to the PLL IC (IC501, pin 10) as the comparison signal.

• 1st LO PLL circuit (RF unit)

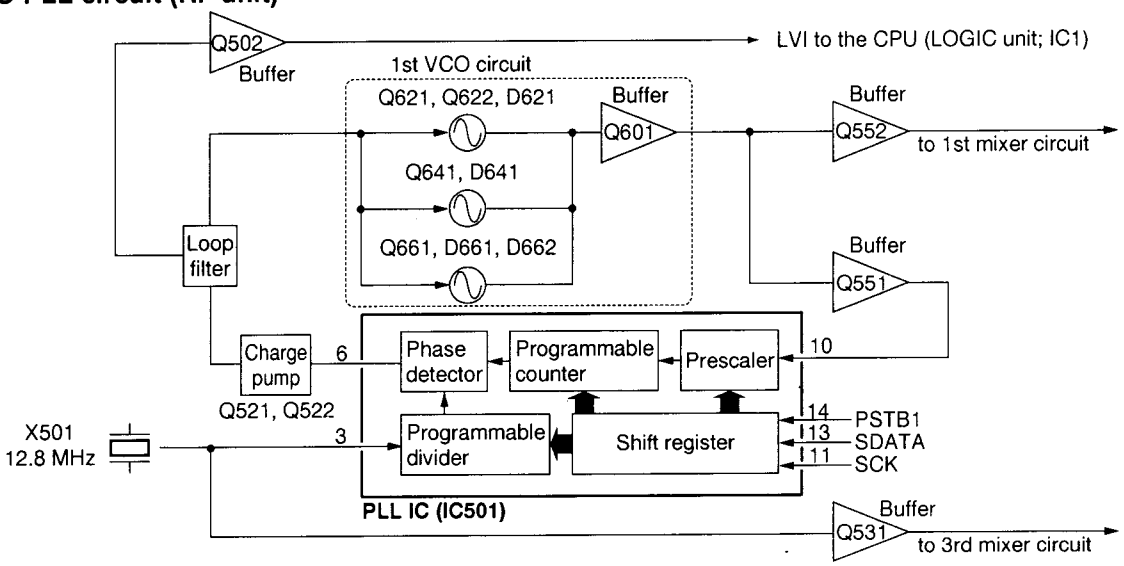

• **1st VCO**

Receive frequency [MHz]	VCO select signal	VCO components	VCO frequency [MHz]
0.5 – 199.9999	V11	Q621, Q622, D621	429.6 – 629.0999
200.0 – 533.2999	V12	Q641, D641	629.1 – 799.9999
533.3 – 609.9999	V13	Q661, D661, D662	800.0 – 876.6999
610.0 – 895.7999	V11	Q621, Q622, D621	343.3 – 629.0999
895.8 – 999.9999	V12	Q641, D641	629.1 – 733.2999
1000.0 – 1058.1999	V11	Q621, Q622, D621	570.9 – 629.0999
1058.2 – 1229.0999	V12	Q641, D641	629.1 – 799.9999
1229.1 – 1300.0000	V13	Q661, D661, D662	800.0 – 870.9000

4-2-5 2ND LO PLL CIRCUIT (MAIN UNIT)

The 2ND LO PLL circuit generates the 2nd LO frequency for the main band (receive signal) and sub-band (band scope and SIGNAVI functions).

Signals from the 2ND VCO unit pass through the buffer amplifier (Q531 for main band, Q551 for the sub-band) and are applied to the PLL IC (IC501; pin 2 and pin 19 respectively) and prescaled in the PLL IC based on the divided ratio (N-data). The PLL IC detects the out-of-step phase using the reference frequency and outputs it from pins 8 and 13. The output signal from pin 8 is passed through the loop filter (R511, R512, R514, C511, C512), and is then applied to the 2ND VCO circuit for the main band (2ND VCO unit) via the 21LV terminal (2ND VCO unit; J601) as the lock voltage. The output signal from pin 13 is passed through the loop filter (R521–R523, C521, C522), and is then applied to the 2ND VCO circuit for the sub-band (2ND VCO unit) via the 22LV terminal (2ND VCO unit; J601) as the lock voltage.

4-2-6 VXO CIRCUIT (MAIN UNIT)

The VXO (Variable Crystal Oscillator) circuit (IC501, X501 and D501) generates a 12.8 MHz 2nd reference frequency. The 2nd reference frequency is stabilized within the temperature range –10°C (+14°F) to +50°C (+122°F). For tuning the 100 Hz frequency step, the VXO circuit changes the capacitance of a varactor diode (D501) via the voltage of the "VXO" line from the CPU (LOGIC unit; IC1), and controls the 2nd reference frequency.

4-2-7 2ND VCO CIRCUIT (2ND VCO UNIT)

The 2ND VCO unit contains two VCO circuits for the main band and sub-band. The VCO circuit for the main band consists of Q602, Q604 and D601, and the VCO circuit for the sub-band consists of Q702, Q704 and D701. The oscillated signal is amplified at the buffer amplifiers (Q603 for the main band, Q703 for the sub-band). Then the 2nd LO signal for the main band is applied to the 2nd mixer (IC11, pin 3) via the buffer amplifier (Q532), and the 2nd LO signal for the sub-band is input to the 2nd mixer for the sub-band (Q411) after being amplified at the buffer amplifier (Q552). The switching transistors (Q601 and Q701) shift the oscillating frequencies via the "IFH" signal from the RF unit.

4-3 POWER SUPPLY CIRCUITS

VOLTAGE LINE (LOGIC UNIT)

Line	Description
HV	The voltage coming from the external DC jack.
VCC	The same voltage as the installed battery cells or HV line passed through the charge control circuit (Q101, D104).
+3CPU	Common 3 V for the CPU (IC1) produced at the +3CPU regulator IC (IC81). The circuit outputs the voltage regardless of the power ON/OFF condition.
+3S	Common 3 V converted from the VCC line by the +3S regulator circuit (Q121, Q122) using a control signal (+3SC) from the CPU.
+3C	Common 3 V converted from the VCC line by the +3C regulator circuit (Q111, Q112) using a control signal (3LCON) from the CPU.
+3L	Common 3 V converted from the VCC line by the +3L regulator circuit (Q91, Q92) using a control signal (3LCON) from the CPU.
+15	Common 15 V converted from the +3L line by the DC-DC convertor IC (IC151).

4-4 CPU PORT ALLOCATIONS

4-4-1 CPU (IC1 on the LOGIC unit)

Pin number	Port name	Description
1	VSC	Input port for VSC detected signals. High: Unmodulated or beat signals are received. Low : Modulated signals are received.
3	BFOS2	Output port for BFO control signal. Low : LSB/CW mode (453.5 kHz) High: USB mode (456.5 kHz)
5	VXO	Output port for VXO frequency control voltage.
6	TUNE	Outputs tunable band pass filter control voltage.
8	CLIN	Input port for the cloning or CI-V control signals.
9	CLOUT	Output port for the cloning or CI-V control signals.
10	BFO3	Output port for BFO regulator control signal. Low : While SSB/CW mode is selected.
12	SDATA	Outputs serial data signals to the PLL ICs, EEPROM (LOGIC unit, IC41) and I/O expander ICs, etc.
13	SCK	Outputs serial clock signal to the PLL ICs, EEPROM (LOGIC unit, IC41) and I/O expander ICs, etc.
14	ISTB	Outputs strobe signals for the I/O expander ICs.
15	VSCS	Outputs VSC-time constant control signal. High: While unmodulated signal or no RF signal is received Low : While receiving modulated signals.
16	ESO	Output port for serial data signals to the EEPROM IC (LOGIC unit, IC41).
17	ESI	Input port for serial data signals from the EEPROM IC (LOGIC unit, IC41).
18	ESCK	Output port for clock signal to the EEPROM IC (LOGIC unit, IC41).
19–22	KS0–KS3	Output strobe signals to the key matrix.
25, 26	PSTB1, PSTB2	Output strobe signals to the PLL ICs.
27–31	K0–K4	Input ports for the key matrix.
32, 34	M0, M1	Input ports for the initial matrix.
44	3LCON	Outputs control signal for the +3C and +3L regulator circuits. High: While turning power ON.
45	LAMP0	Outputs LCD and key backlight control signal. Low : While backlight is ON.

CPU (IC1) — continued

Pin number	Port name	Description
46	+3SC	Outputs control signal for the +3S regulator circuit. Low: During PLL unlock or power save.
48	VSCC	Outputs VSC control signals. Low : When the VSC function is ON.
49	MUTE	Outputs AF mute switch (IC950) control signals. Low : While muted.
50	BEEP	Output port for beep audio signals.
51	AFONC	Outputs a control signal for AF amplifier regulator circuit. High: When squelch is open. (FM mode only)
52–59	I/O0–I/O7	Ouput ports for the LCD control data.
60	RESET	Input port for the reset signal.
61	FUNC	Input port for the [FUNC] switch. Low : While [FUNC] switch is pushed.
62	POWSW	Input port for the [PWR] switch. Low: While [PWR] switch is pushed.
63	D-UD	Input port for the [DIAL].
64	D-CK	
65	SQL	Input port for the main band noise signals.
66	S-SQL	Input port for the sub-band noise signals.
73	UL	Input port for PLL unlock signal from the PLL ICs.
76	RSSI	Input port for the main band receive signal strength level.
77	CENT	Input port for the AFC control voltage.
78	S-RSSI	Input port for the sub-band receive signal strength level.
79	BATT	Input port for connected voltage low battery detection.
80	LVI	Input port for the PLL lock voltage information.

4-4-2 OUTPUT EXPANDER IC

(1) MAIN UNIT, IC305

Pin number	Port name	Description
4	WFMC	Outputs WFM mode select signals. Low : When WFM is selected.
5	NFMC	Outputs NFM mode select signals. Low : When NFM is selected.
6	AMC	Outputs AM mode select signals. Low : When AM is selected.
7	SSBC	Outputs SSB mode select signals. Low : When SSB is selected.
11	NBC	Outputs NB control signals. Low : When NB function is ON. (SSB/CW mode only)
12	ANLC	Outputs ANL control signals. Low : When ANL function is ON. (AM mode only)
14	S-PWC	Outputs sub-band regulator control signals. Low : While the bandscope or SIGNAVI functionis activated.

(2) RF UNIT, IC1

Pin number	Port name	Description
4	B0C	Outputs low-pass filter select signal . Low : When frequencies below 1.9 MHz are displayed.
5	B1C	Outputs bandpass filter select signal. Low : When frequencies from 1.9 to 14.9999 MHz are displayed.
6	B2C	Outputs bandpass filter select signal. Low : When frequencies from 15.0 to 29.9999 MHz are displayed.
7	B3C	Outputs bandpass filter select signal. Low : When frequencies from 30.0 to 74.9999 MHz are displayed.
11	B7C	Outputs bandpass filter select signal. Low : When frequencies from 700.0 to 1300.0000 MHz are displayed.
12	B6C	Outputs bandpass filter select signal. Low : When frequencies from 500.0 to 699.9999 MHz are displayed.
13	B5C	Outputs bandpass filter select signal. Low : When frequencies from 200.0 to 499.9999 MHz are displayed.
14	B4C	Outputs bandpass filter select signal. Low : When frequencies from 75.0 to 199.9999 MHz are displayed.

(3) RF UNIT, IC2

Pin number	Port name	Description
4	V11C	Outputs VCO1 select signals. Low : VCO1 (343.3–629.0999 MHz) is activated.
5	V12C	Outputs VCO2 select signals. Low : VCO2 (629.1–799.9999 MHz) is activated.
6	V13C	Outputs VCO3 select signals. Low : VCO3 (800.0–876.7 MHz) is activated.
7	N1HC	Outputs 1st mixer input select signals. Low : When frequencies from 0.5 to 75 MHz are displayed.
11	SHIFT	Outputs 2nd VCO shift control signal for VCO1.
12	ATTC	Outputs attenuator control signals. Low : Attenuator function is ON.
14	IFHC	Outputs 1st IF select signals. High: When frequencies from 340.0 to 999.9999 MHz are displayed. Low : When frequencies from 0.5 to 339.9999 MHz or 1000.0 to 1300.0 MHz are displayed.

SECTION 5 ADJUSTMENT PROCEDURES

5-1 PLL AND BFO ADJUSTMENT

ADJUSTMENT		ADJUSTMENT CONDITIONS	MEASUREMENT		VALUE	ADJUSTMENT	
			UNIT	LOCATION		UNIT	ADJUST
1ST VCO LOCK VOLTAGE	1	• Displayed frequency: 200 MHz : 534 MHz : 610 MHz : 846 MHz • Receiving	MAIN	Connect a voltmeter (1 MΩ impedance) to the check point LVI.	More than 0.2 V		Verify
	2	• Displayed frequency: 533 MHz : 609 MHz : 845 MHz : 895 MHz • Receiving			Less than 3.3 V		
2ND VCO LOCK VOLTAGE	1	• Displayed frequency: 100 MHz • Mode : SSB • Noise Blanker : ON • Receiving	MAIN	Connect a voltmeter (1 MΩ impedance) to the check point 21LV.	Less than 2.5 V		Verify
	2	• Displayed frequency: 500 MHz • Receiving			More than 0.6 V		
	3	• Displayed frequency: 100 MHz • Mode : SSB • Noise Blanker : ON • Receiving		Connect a voltmeter (1 MΩ impedance) to the check point 22LV.	Less than 2.5 V		
	4	• Displayed frequency: 500 MHz • Receiving			More than 0.6 V		
1ST REFERENCE FREQUENCY	1	• Displayed frequency: Any • Mode : Any • Receiving	MAIN	Connect a frequency counter to the check point REF.	10.24500 MHz	RF	C501
BFO FREQUENCY	1	• Displayed frequency: 144.0000 MHz • Mode : LSB • Receiving	LOGIC	Connect a frequency counter to the check point CP1.	453.500 kHz	LOGIC	R239
	2	• Mode : USB • Receiving			456.500 kHz		R243

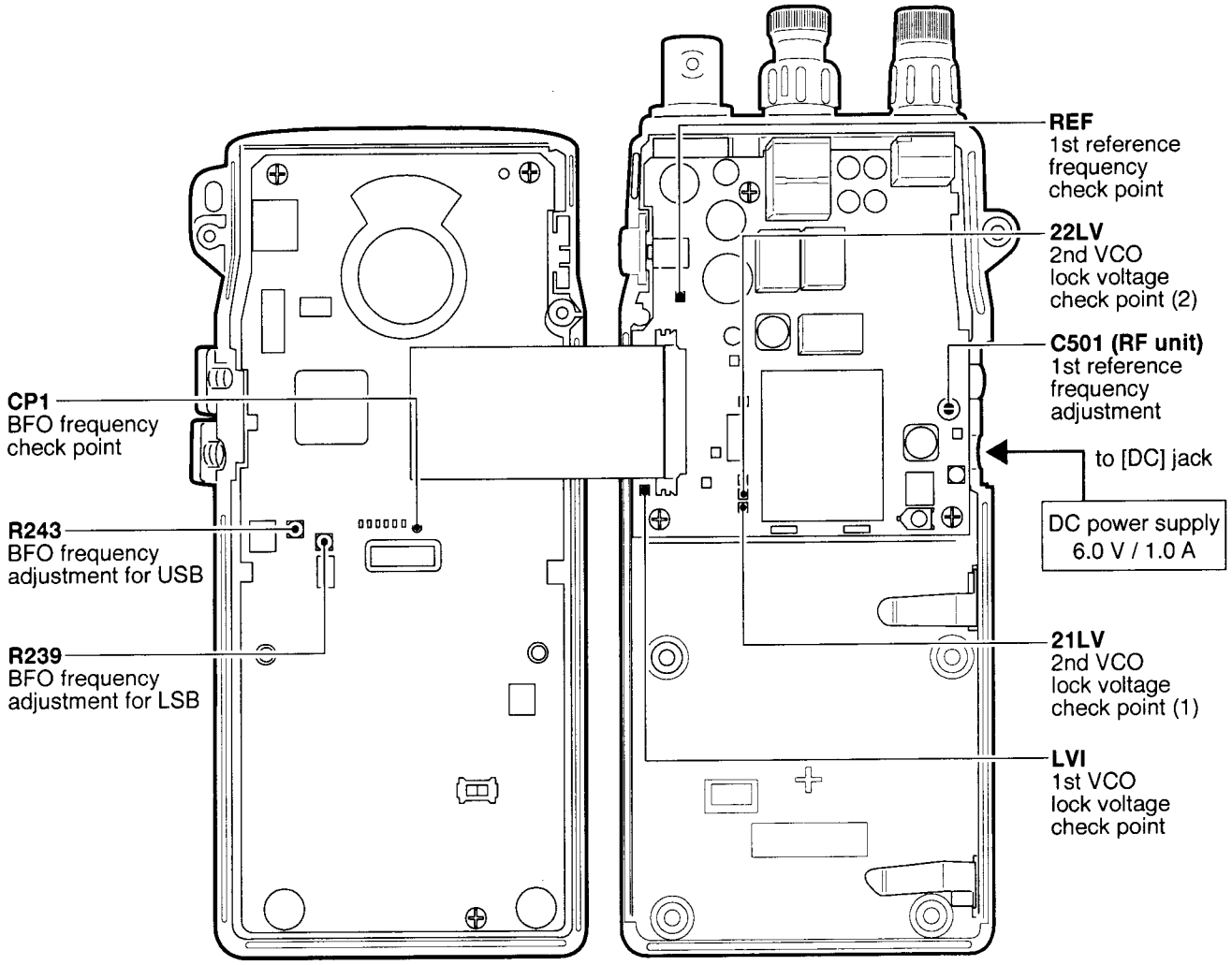
REF
1st reference frequency check point
22LV
2nd VCO lock voltage check point (2)
C501 (RF unit)
1st reference frequency adjustment
to [DC] jack
DC power supply
6.0 V / 1.0 A
21LV
2nd VCO lock voltage check point (1)
LVI
1st VCO lock voltage check point
CP1
BFO frequency check point
R243
BFO frequency adjustment for USB
R239
BFO frequency adjustment for LSB

5-2 COMMAND ADJUSTMENT (ADJUSTMENT SET MODE)

ADJUSTMENT		ADJUSTMENT CONDITIONS	DISPLAY	OPERATION
ADJUSTMENT SET MODE	1	• Apply square wave form signals (10 Hz, 3 V p-p) to the [CI-V] connector.	VXOｷｮｳｾｲ EDITｷｰｦｵｽ	While pushing [EDIT], turn power ON.
VXO (2ND REFERENCE FREQUENCY)	1	• Turn [DIAL] to select the VXO adjustment.	VXOｷｮｳｾｲ EDITｷｰｦｵｽ	Push [EDIT] to enter the VXO adjustment.
	2	• Connect a frequency counter via 0.001 μF capacitor to the check point PLM. • Frequency : 512.0000 MHz	VXO-HC μV 512.0 MHz	Adjust C503 on the MAIN unit to 512.00000 MHz.
	3	• Push [EDIT] to select adjustment frequency. • Frequency : 511.9950 MHz	VXO-LL 080 511.9950 MHz	Turn [DIAL] to set correction level closest to the display frequency, and then push [ENT] to program into memory.
	4	• Push [EDIT] to select adjustment frequency. • Frequency : 512.0050 MHz	VXO-LH 193 512.0050 MHz	Turn [DIAL] to set correction level closest to the display frequency, and then push [ENT] to program into memory.
	5	• Push [EDIT] to select adjustment frequency. • Frequency : 418.3975 MHz	VXO-HL 099 418.3975 MHz	Turn [DIAL] to set correction level closest to the display frequency, and then push [ENT] to program into memory.
	6	• Push [EDIT] to select adjustment frequency. • Frequency : 418.4025 MHz	VXO-LH 162 418.4025 MHz	Turn [DIAL] to set correction level closest to the display frequency, and then push [ENT] to program into memory. Push [EDIT] to return to the same condition as that in step 1.
AFC	1	• Turn [DIAL] to select the AFC adjustment.	AFCｷｮｳｾｲ EDITｷｰｦｵｽ	Push [EDIT] to enter the AFC adjustment.
	2	• Connect an SSG to the antenna connector and set as: Frequency : 145.00000 MHz Level : 1 mV* (–47 dBm) Mode : FM Modulation : OFF • Connect a voltmeter (100 kΩ impedance) to the check point QM on the MAIN unit. • Receiving	145.0000 MHz	Adjust L71 on the MAIN unit to 1.0 V.
	3	• Connect a voltmeter (100 kΩ impedance) to the check point QS on the MAIN unit. • Receiving		Adjust L471 on the MAIN unit to 1.0 V.
	4	• Push [ENT] to program into memory.	OK	Verify that "OK" appears on the display. Push [EDIT] to return to the same condition as that in step 1.

*This output level of a standard signal generator (SSG) is indicated as SSG's open circuit.

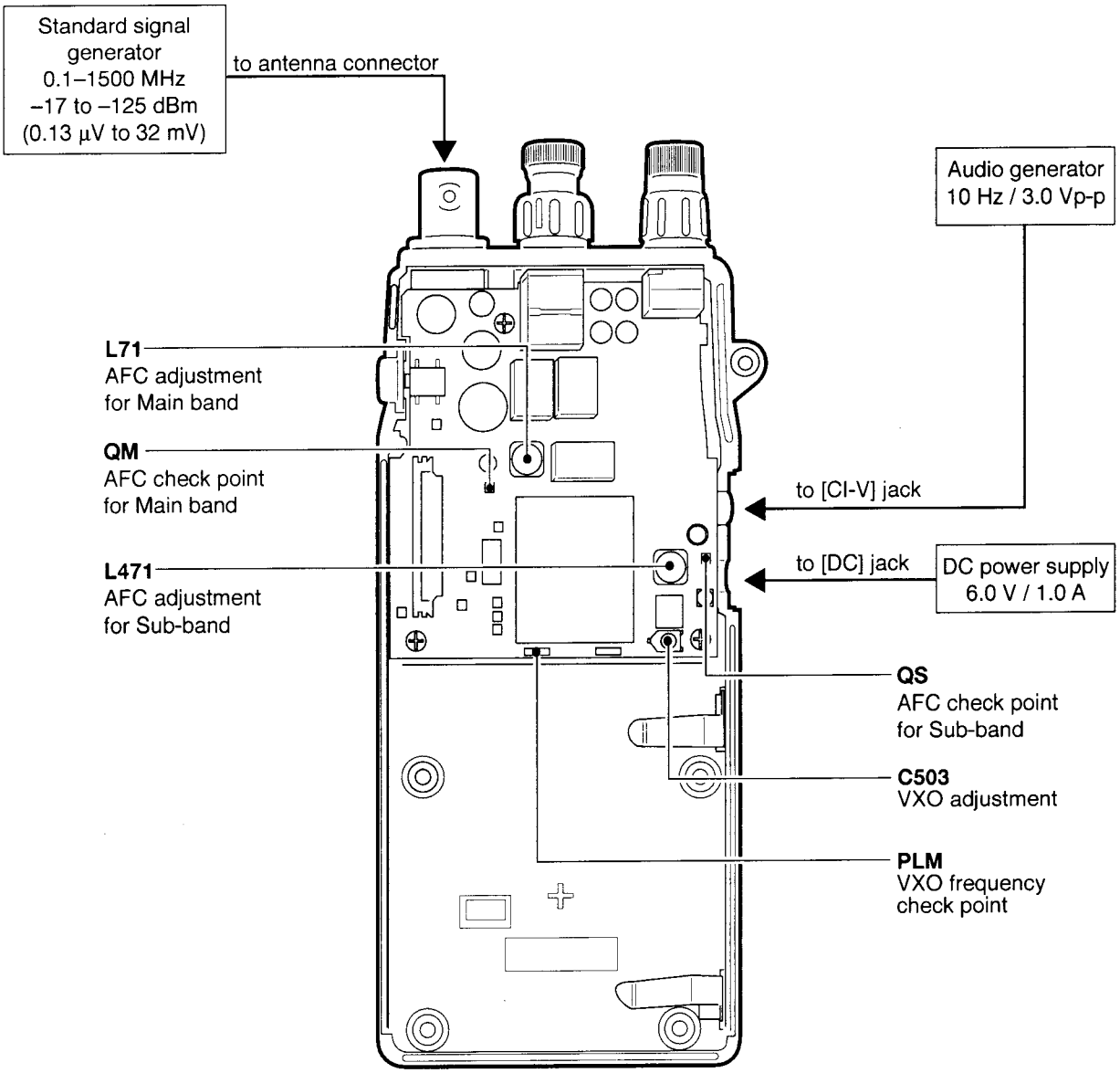
Standard signal generator
0.1–1500 MHz
–17 to –125 dBm
(0.13 µV to 32 mV)
to antenna connector
Audio generator
10 Hz / 3.0 Vp-p
L71
AFC adjustment
for Main band
QM
AFC check point
for Main band
L471
AFC adjustment
for Sub-band
to [CI-V] jack
to [DC] jack
DC power supply
6.0 V / 1.0 A
QS
AFC check point
for Sub-band
C503
VXO adjustment
PLM
VXO frequency
check point

COMMAND ADJUSTMENT (CONTINUED)

ADJUSTMENT		ADJUSTMENT CONDITIONS	DISPLAY	OPERATION
BPF	1	• Turn [DIAL] to select the BPF adjustment.	BPFｷｮｳﾁｮｳ EDITｷｰｦｵｽ	Push [EDIT] to enter the BPF adjustment.
	2	• Connect an SSG to the antenna connector and set as: Frequency : 75.0100 MHz Level : 1 mV* (–77 dBm) or less Note: When the S-meter indicats more than 5 segments, reduce SSG's level. Mode : Any Modulation : OFF • Receiving	75.0100	Turn [DIAL] to set maximum S-meter level, and then push [ENT] to program into memory.
	3	• Push [EDIT] to select adjustment frequency, then repeat step 2 for frequencies below. • Set an SSG as : Frequency : 120.0200 MHz, 149.9900 MHz 150.0100 MHz, 199.9900 MHz 200.0100 MHz, 339.9900 MHz 340.0100 MHz, 430.0100 MHz 499.9900 MHz, 500.0100 MHz 533.2900 MHz, 610.0100 MHz 609.9900 MHz, 699.9900 MHz 700.0100 MHz, 845.7900 MHz 845.8100 MHz, 895.7900 MHz 895.8100 MHz, 999.9900 MHz 1000.0100 MHz, 1008.1900 MHz 1008.2100 MHz, 1058.1900 MHz 1058.2100 MHz, 1229.0900 MHz 1229.1100 MHz, 1299.9900 MHz • Receiving	The display shows frequencies listed at left in sequence.	
S-METER/ SQUELCH	1	• Turn [DIAL] to select the S-METER/ SQUELCH adjustment.	Sﾒｰﾀｰｷｮｳﾁｮｳ EDITｷｰｦｵｽ	Push [EDIT] to enter the S-METER adjustment.
	2	• Connect an SSG to the antenna connector and set as: Frequency : 14.5000 MHz Level : 0.5 μV* (–113 dBm) Mode : FM Modulation : 1 kHz Deviation : 3.5 kHz • Receiving	14.5000 076 096	Push [ENT] to program into memory.
	3	• Push [EDIT] to select adjustment frequency. • Set an SSG as : Frequency : 144.5000 MHz • Receiving	144.5000 061 081	Push [ENT] to program into memory.
	4	• Push [EDIT] to select adjustment frequency. • Set an SSG as : Frequency : 324.5000 MHz • Receiving	324.5000 061 081	Push [ENT] to program into memory.
	5	• Push [EDIT] to select adjustment frequency. • Set an SSG as : Frequency : 679.9000 MHz • Receiving	679.9000 061 081	Push [ENT] to program into memory.

*This output level of a standard signal generator (SSG) is indicated as SSG's open circuit.

COMMAND ADJUSTMENT (CONTINUED)

ADJUSTMENT		ADJUSTMENT CONDITIONS	DISPLAY	OPERATION
S-METER/ SQUELCH	5	• Set an SSG as : Frequency : 1264.5000 MHz Level : 0.71 μV* (–110 dBm) • Receiving	1264.5000 061 081	Push [ENT] to program into memory.
	6	• Push [EDIT] to enter the SQUELCH adjustment. • Set an SSG as : Frequency : 144.5000 MHz Level : 0.18 μV* (–122 dBm) • Receiving	144.5000 SQL-CLOSE 144.5000 SQL-OPEN	Adjust R478 on the MAIN unit so that the display changes from "CLOSE" to "OPEN" and "OPEN" stays on.
	7	• Set an SSG as : Level : OFF • Receiving	144.5000 SQL-CLOSE	Verify that the display returns to "CLOSE". Push [EDIT] to return to the same as that in step 1.

*This output level of a standard signal generator (SSG) is indicated as SSG's open circuit.

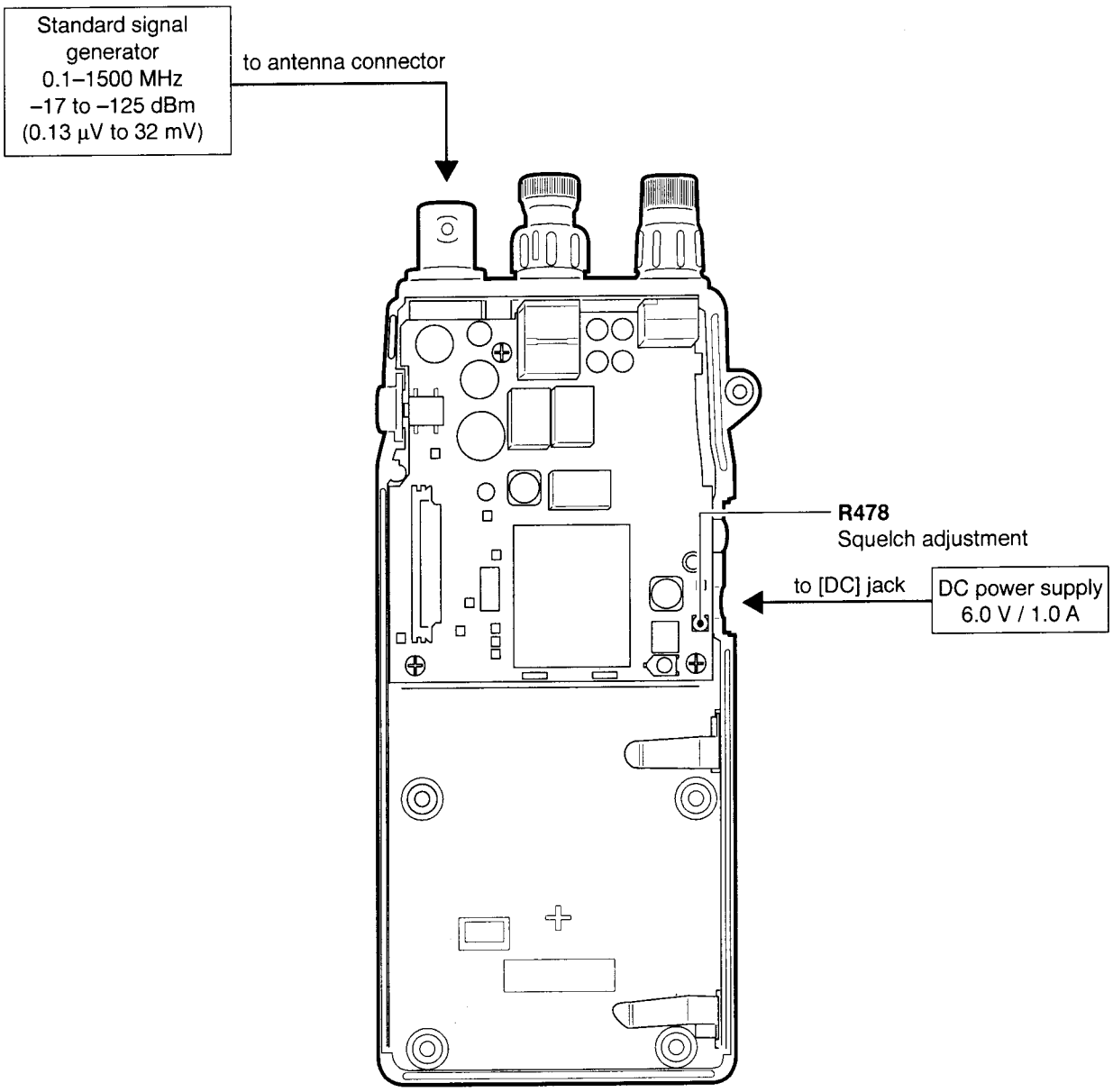

SECTION 6 PARTS LIST

[LOGIC UNIT]

REF NO.	ORDER NO.	DESCRIPTION		
IC1	1140006510	S.IC	μPD78054GK-532-BE9	
IC41	1130008400	S.IC	X25128SI-2.7T6	
IC42	1130005720	S.IC	TC7W04F (TE12L)	
IC71	1110003380	S.IC	S-80730SL-AT-T1	
IC81	1180001240	S.IC	S-81335HG-KI-T1	
IC151	1180001630	S.IC	TK11812MTL	
IC201	1140006210	S.IC	μPC5023GR-115-GJG-E1	
IC231	1130004830	S.IC	TC7SU04F (TE85R)	
IC950	1130004200	S.IC	TC4S66F (TE85R)	
Q71	1530003280	S.TRANSISTOR	2SC4211-6-TL	
Q91	1520000460	S.TRANSISTOR	2SB1132 T100 R	
Q92	1590001170	S.TRANSISTOR	XP1501-(TX).AB	
Q101	1520000460	S.TRANSISTOR	2SB1132 T100 R	
Q111	1520000460	S.TRANSISTOR	2SB1132 T100 R	
Q112	1590001170	S.TRANSISTOR	XP1501-(TX).AB	
Q121	1520000460	S.TRANSISTOR	2SB1132 T100 R	
Q122	1590001170	S.TRANSISTOR	XP1501-(TX).AB	
Q131	1530003280	S.TRANSISTOR	2SC4211-6-TL	
Q132	1510000880	S.TRANSISTOR	2SA1622-6-TL	
Q141	1590000720	S.TRANSISTOR	DTA144EU T107	
Q142	1540000550	S.TRANSISTOR	2SD1664 T100Q	
Q181	1530003280	S.TRANSISTOR	2SC4211-6-TL	
Q182	1510000880	S.TRANSISTOR	2SA1622-6-TL	
Q201	1590000720	S.TRANSISTOR	DTA144EU T107	
Q202	1590001130	S.TRANSISTOR	UN9110 (TX)	
Q203	1590001140	S.TRANSISTOR	UN9210 (TX)	
Q204	1590001130	S.TRANSISTOR	UN9110 (TX)	
Q243	1590000720	S.TRANSISTOR	DTA144EU T107	
Q950	1530003280	S.TRANSISTOR	2SC4211-6-TL	
D51	1790001280	S.DIODE	MA111 (TX)	
D52	1790001200	S.DIODE	MA6S121 (TX)	
D53	1160000050	S.DIODE	DAP202U T107	[FRA]
	1750000220	S.DIODE	DA113W T107	[EUR], [UK]
	1750000240	S.DIODE	DA112 T107	[USA]
D54	1750000240	S.DIODE	DA112 T107	[USA]
D71	1790001280	S.DIODE	MA111 (TX)	
D72	1730002320	S.ZENER	MA8051-M (TX)	
D101	1790000670	S.DIODE	SB07-03C-TB	
D103	1790001280	S.DIODE	MA111 (TX)	
D104	1750000130	S.DIODE	DA204U T107	
D131	1790001280	S.DIODE	MA111 (TX)	
D151	1790000660	S.DIODE	MA728 (TW)	
D231	1720000600	S.VARICAP	HN2V02H-B (TE12R)	
D232	1790001280	S.DIODE	MA111 (TX)	[UK]
X1	6060000610	S.CERAMIC	EFOS4914E3	
X231	6060000660	S.CERAMIC	CSBF458J	
L151	6200003620	S.COIL	LQH 3C 331K04	
L152	6200006720	S.COIL	5CA-395KN-0369AQ=P3	
L153	6200003550	S.COIL	MLF1608A 4R7K-T	
R4	7030003640	S.RESISTOR	ERJ3GEYJ 473 V (47 kΩ)	
R5	7030003440	S.RESISTOR	ERJ3GEYJ 102 V (1 kΩ)	
R6	7030003440	S.RESISTOR	ERJ3GEYJ 102 V (1 kΩ)	
R7	7030003440	S.RESISTOR	ERJ3GEYJ 102 V (1 kΩ)	
R8	7030003640	S.RESISTOR	ERJ3GEYJ 473 V (47 kΩ)	
R11	7030003640	S.RESISTOR	ERJ3GEYJ 473 V (47 kΩ)	
R12	7030003680	S.RESISTOR	ERJ3GEYJ 104 V (100 kΩ)	
R13	7030003640	S.RESISTOR	ERJ3GEYJ 473 V (47 kΩ)	
R14	7030003640	S.RESISTOR	ERJ3GEYJ 473 V (47 kΩ)	
R24	7030003880	S.RESISTOR	ERJ3GEYJ 244 V (240 kΩ)	
R25	7030003820	S.RESISTOR	ERJ3GEYJ 155 V (1.5 MΩ)	
R41	7030003640	S.RESISTOR	ERJ3GEYJ 473 V (47 kΩ)	
R71	7030003640	S.RESISTOR	ERJ3GEYJ 473 V (47 kΩ)	
R72	7030003640	S.RESISTOR	ERJ3GEYJ 473 V (47 kΩ)	
R73	7030003640	S.RESISTOR	ERJ3GEYJ 473 V (47 kΩ)	
R74	7030003640	S.RESISTOR	ERJ3GEYJ 473 V (47 kΩ)	
R78	7030005520	S.RESISTOR	RR0816R-334-D (330 kΩ)	

[LOGIC UNIT]

REF NO.	ORDER NO.	DESCRIPTION	
R79	7030005970	S.RESISTOR	RR0816R-683-D (68 kΩ)
R91	7030003480	S.RESISTOR	ERJ3GEYJ 222 V (2.2 kΩ)
R101	7030000180	S.RESISTOR	MCR10EZHJ 22 Ω (220)
R102	7030000180	S.RESISTOR	MCR10EZHJ 22 Ω (220)
R103	7030003560	S.RESISTOR	ERJ3GEYJ 103 V (10 kΩ)
R111	7030003560	S.RESISTOR	ERJ3GEYJ 103 V (10 kΩ)
R112	7030003560	S.RESISTOR	ERJ3GEYJ 103 V (10 kΩ)
R121	7030003560	S.RESISTOR	ERJ3GEYJ 103 V (10 kΩ)
R122	7030003520	S.RESISTOR	ERJ3GEYJ 472 V (4.7 kΩ)
R131	7030003640	S.RESISTOR	ERJ3GEYJ 473 V (47 kΩ)
R132	7030003600	S.RESISTOR	ERJ3GEYJ 223 V (22 kΩ)
R133	7030003580	S.RESISTOR	ERJ3GEYJ 153 V (15 kΩ)
R134	7030003540	S.RESISTOR	ERJ3GEYJ 682 V (6.8 kΩ)
R135	7030003640	S.RESISTOR	ERJ3GEYJ 473 V (47 kΩ)
R141	7030003410	S.RESISTOR	ERJ3GEYJ 561 V (560 Ω)
R142	7030003410	S.RESISTOR	ERJ3GEYJ 561 V (560 Ω)
R143	7030003410	S.RESISTOR	ERJ3GEYJ 561 V (560 Ω)
R144	7030003410	S.RESISTOR	ERJ3GEYJ 561 V (560 Ω)
R145	7030003410	S.RESISTOR	ERJ3GEYJ 561 V (560 Ω)
R146	7030003410	S.RESISTOR	ERJ3GEYJ 561 V (560 Ω)
R147	7030003360	S.RESISTOR	ERJ3GEYJ 221 V (220 Ω)
R148	7030003360	S.RESISTOR	ERJ3GEYJ 221 V (220 Ω)
R149	7030003360	S.RESISTOR	ERJ3GEYJ 221 V (220 Ω)
R150	7030003360	S.RESISTOR	ERJ3GEYJ 221 V (220 Ω)
R151	7030003560	S.RESISTOR	ERJ3GEYJ 103 V (10 kΩ)
R152	7030003600	S.RESISTOR	ERJ3GEYJ 223 V (22 kΩ)
R153	7030003810	S.RESISTOR	ERJ3GEYJ 125 V (1.2 MΩ)
R154	7030003680	S.RESISTOR	ERJ3GEYJ 104 V (100 kΩ)
R155	7030003560	S.RESISTOR	ERJ3GEYJ 103 V (10 kΩ)
R156	7030003570	S.RESISTOR	ERJ3GEYJ 123 V (12 kΩ)
R181	7030003600	S.RESISTOR	ERJ3GEYJ 223 V (22 kΩ)
R183	7030003680	S.RESISTOR	ERJ3GEYJ 104 V (100 kΩ)
R201	7030003580	S.RESISTOR	ERJ3GEYJ 153 V (15 kΩ)
R202	7030003580	S.RESISTOR	ERJ3GEYJ 153 V (15 kΩ)
R203	7030003700	S.RESISTOR	ERJ3GEYJ 154 V (150 kΩ)
R204	7030003460	S.RESISTOR	ERJ3GEYJ 152 V (1.5 kΩ)
R205	7030003710	S.RESISTOR	ERJ3GEYJ 184 V (180 kΩ)
R206	7030003560	S.RESISTOR	ERJ3GEYJ 103 V (10 kΩ)
R207	7030003580	S.RESISTOR	ERJ3GEYJ 153 V (15 kΩ)
R208	7030003740	S.RESISTOR	ERJ3GEYJ 334 V (330 kΩ)
R211	7030003680	S.RESISTOR	ERJ3GEYJ 104 V (100 kΩ)
R212	7030003680	S.RESISTOR	ERJ3GEYJ 104 V (100 kΩ)
R231	7030003320	S.RESISTOR	ERJ3GEYJ 101 V (100 Ω)
R234	7030003580	S.RESISTOR	ERJ3GEYJ 153 V (15 kΩ)
R235	7030003800	S.RESISTOR	ERJ3GEYJ 105 V (1 MΩ)
R236	7030003840	S.RESISTOR	ERJ3GEYJ 225 V (2.2 MΩ)
R237	7030003840	S.RESISTOR	ERJ3GEYJ 225 V (2.2 MΩ)
R238	7030003720	S.RESISTOR	ERJ3GEYJ 224 V (220 kΩ)
R239	7310003600	S.TRIMMER	EVM-1XSX50 B54 (503)
R240	7030003580	S.RESISTOR	ERJ3GEYJ 153 V (15 kΩ)
R243	7310003590	S.TRIMMER	EVM-1XSX50 B24 (203)
R950	7030003520	S.RESISTOR	ERJ3GEYJ 472 V (4.7 kΩ)
R951	7030003620	S.RESISTOR	ERJ3GEYJ 333 V (33 kΩ)
R952	7030003700	S.RESISTOR	ERJ3GEYJ 154 V (150 kΩ)
R953	7030003740	S.RESISTOR	ERJ3GEYJ 334 V (330 kΩ)
R954	7030003740	S.RESISTOR	ERJ3GEYJ 334 V (330 kΩ)
R955	7030003590	S.RESISTOR	ERJ3GEYJ 183 V (18 kΩ)
R956	7030003560	S.RESISTOR	ERJ3GEYJ 103 V (10 kΩ)
R957	7030003620	S.RESISTOR	ERJ3GEYJ 333 V (33 kΩ)
R958	7030003720	S.RESISTOR	ERJ3GEYJ 224 V (220 kΩ)
R959	7030003620	S.RESISTOR	ERJ3GEYJ 333 V (33 kΩ)
R961	7030003520	S.RESISTOR	ERJ3GEYJ 472 V (4.7 kΩ)
C1	4030007010	S.CERAMIC	C1608 CH 1H 100D-T-A
C2	4030007010	S.CERAMIC	C1608 CH 1H 100D-T-A
C3	4030011600	S.CERAMIC	C1608 JB 1C 104KT-N
C4	4030006860	S.CERAMIC	C1608 JB 1H 102K-T-A
C21	4550006300	S.TANTALUM	ECST1AY475R
C22	4550006300	S.TANTALUM	ECST1AY475R
C23	4030011600	S.CERAMIC	C1608 JB 1C 104KT-N
C24	4030011600	S.CERAMIC	C1608 JB 1C 104KT-N
C25	4030011600	S.CERAMIC	C1608 JB 1C 104KT-N
C26	4030011600	S.CERAMIC	C1608 JB 1C 104KT-N
C27	4030011600	S.CERAMIC	C1608 JB 1C 104KT-N
C41	4030006900	S.CERAMIC	C1608 JB 1E 103K-T-A

S.=Surface mount

[LOGOC UNIT]

REF NO.	ORDER NO.	DESCRIPTION	
C71	4030006860	S.CERAMIC	C1608 JB 1H 102K-T-A
C72	4030006900	S.CERAMIC	C1608 JB 1E 103K-T-A
C81	4550006830	S.TANTALUM	ECST1DY475R
C82	4030006860	S.CERAMIC	C1608 JB 1H 102K-T-A
C83	4030006860	S.CERAMIC	C1608 JB 1H 102K-T-A
C84	4550006320	S.TANTALUM	ECST0JY475R
C91	4030006860	S.CERAMIC	C1608 JB 1H 102K-T-A
C92	4550006200	S.TANTALUM	ECST0JY106R
C101	4030006860	S.CERAMIC	C1608 JB 1H 102K-T-A
C111	4030011600	S.CERAMIC	C1608 JB 1C 104KT-N
C112	4030006860	S.CERAMIC	C1608 JB 1H 102K-T-A
C113	4550006320	S.TANTALUM	ECST0JY475R
C121	4030011600	S.CERAMIC	C1608 JB 1C 104KT-N
C122	4030006860	S.CERAMIC	C1608 JB 1H 102K-T-A
C123	4550006320	S.TANTALUM	ECST0JY475R
C151	4550006320	S.TANTALUM	ECST0JY475R
C152	4030006900	S.CERAMIC	C1608 JB 1E 103K-T-A
C153	4030006900	S.CERAMIC	C1608 JB 1E 103K-T-A
C154	4550006200	S.TANTALUM	ECST0JY106R
C155	4030008650	S.CERAMIC	C1608 JB 1H 332K-T-A
C156	4030006900	S.CERAMIC	C1608 JB 1E 103K-T-A
C157	4550006820	S.TANTALUM	ECST1DX106R
C158	4030006900	S.CERAMIC	C1608 JB 1E 103K-T-A
C159	4550006820	S.TANTALUM	ECST1DX106R
C160	4030006900	S.CERAMIC	C1608 JB 1E 103K-T-A
C201	4030009000	S.CERAMIC	C2012 JB 1C 224K-T-A
C202	4030006880	S.CERAMIC	C1608 JB 1H 472K-T-A
C203	4030007170	S.CERAMIC	C1608 CH 1H 221J-T-A
C204	4030007110	S.CERAMIC	C1608 CH 1H 680J-T-A
C205	4550006140	S.TANTALUM	ECST1EY474R
C206	4030008650	S.CERAMIC	C1608 JB 1H 332K-T-A
C207	4550006680	S.TANTALUM	ECST0JY156R
C208	4030011600	S.CERAMIC	C1608 JB 1C 104KT-N
C209	4550006130	S.TANTALUM	ECST1VY224R
C210	4030011600	S.CERAMIC	C1608 JB 1C 104KT-N
C211	4550006320	S.TANTALUM	ECST0JY475R
C212	4550006130	S.TANTALUM	ECST1VY224R
C213	4550006320	S.TANTALUM	ECST0JY475R
C214	4550006320	S.TANTALUM	ECST0JY475R
C233	4030011600	S.CERAMIC	C1608 JB 1C 104KT-N
C234	4030006850	S.CERAMIC	C1608 JB 1H 471K-T-A
C235	4030006900	S.CERAMIC	C1608 JB 1E 103K-T-A
C237	4030006900	S.CERAMIC	C1608 JB 1E 103K-T-A
C238	4030006900	S.CERAMIC	C1608 JB 1E 103K-T-A
C239	4030006850	S.CERAMIC	C1608 JB 1H 471K-T-A
C245	4030006860	S.CERAMIC	C1608 JB 1H 102K-T-A
C246	4030011600	S.CERAMIC	C1608 JB 1C 104KT-N
C950	4030011600	S.CERAMIC	C1608 JB 1C 104KT-N
C951	4030006860	S.CERAMIC	C1608 JB 1H 102K-T-A
C953	4030006900	S.CERAMIC	C1608 JB 1E 103K-T-A
C954	4030006860	S.CERAMIC	C1608 JB 1H 102K-T-A
C955	4030011600	S.CERAMIC	C1608 JB 1C 104KT-N
C956	4030007110	S.CERAMIC	C1608 CH 1H 680J-T-A
C957	4030011600	S.CERAMIC	C1608 JB 1C 104KT-N
C958	4550006140	S.TANTALUM	ECST1EY474R
F1	5210000530	S.FUSE	TR3216FF3A
DS1	5030001490	LCD	EDMCU06F00
DS141	5010000120	S.LED	LN1371G-(TR)
DS142	5010000120	S.LED	LN1371G-(TR)
DS143	5010000120	S.LED	LN1371G-(TR)
DS144	5010000120	S.LED	LN1371G-(TR)
DS145	5010000120	S.LED	LN1371G-(TR)
DS146	5010000120	S.LED	LN1371G-(TR)
DS147	5040002230	S.LED	CL-200YG-C-TS
DS148	5040002230	S.LED	CL-200YG-C-TS
DS149	5040002230	S.LED	CL-200YG-C-TS
DS150	5040002230	S.LED	CL-200YG-C-TS
S101	2220000330	S.SWITCH	HSW0880-01-210
W1	8900007370	CABLE	OPC-720
W3	7030003860	S.JUMPER	ERJ3GE JPW V except [USA]
W4	7030003860	S.JUMPER	ERJ3GE JPW V except [USA]
W5	7030003860	S.JUMPER	ERJ3GE JPW V
W7	7120000470	JUMPER	ERDS2T0 [UK]
W8	7120000470	JUMPER	ERDS2T0 [UK]

[LOGIC UNIT]

REF NO.	ORDER NO.	DESCRIPTION	
W201	7030003860	S.JUMPER	ERJ3GE JPW V
SP1	2510000960	SPEAKER	K036NA500-26
EP1	0910048045	PCB	B 4901E

[MAIN UNIT]

REF NO.	ORDER NO.	DESCRIPTION	
IC11	1110004020	S.IC	μPC2757T-E3
IC71	1110003490	S.IC	TA31136FN (D,EL)
IC301	1130008090	S.IC	BU4066BCFV-E1
IC305	1130007510	S.IC	BU4094BCFV-E1
IC361	1110001810	S.IC	TA7368F (TP1)
IC471	1110003490	S.IC	TA31136FN (D,EL)
IC501	1130007610	S.IC	μPD3140GS-E1 (DS8)
Q21	1530002600	S.TRANSISTOR	2SC4215-O (TE85R)
Q71	1590000720	S.TRANSISTOR	DTA144EU T107
Q151	1530003280	S.TRANSISTOR	2SC4211-6-TL
Q152	1530003280	S.TRANSISTOR	2SC4211-6-TL
Q161	1530003280	S.TRANSISTOR	2SC4211-6-TL
Q171	1530003280	S.TRANSISTOR	2SC4211-6-TL
Q172	1590000430	S.TRANSISTOR	DTC144EU T107
Q182	1530003280	S.TRANSISTOR	2SC4211-6-TL
Q183	1590000720	S.TRANSISTOR	DTA144EU T107
Q184	1530003280	S.TRANSISTOR	2SC4211-6-TL
Q201	1530003280	S.TRANSISTOR	2SC4211-6-TL
Q202	1560000810	S.FET	2SK1069-4-TL
Q301	1590001810	S.TRANSISTOR	XP1113 (TX)
Q302	1590001810	S.TRANSISTOR	XP1113 (TX)
Q303	1590001810	S.TRANSISTOR	XP1113 (TX)
Q304	1590002010	S.TRANSISTOR	XP1114 (TX)
Q351	1520000650	S.TRANSISTOR	2SB1201-S-TL
Q352	1530003280	S.TRANSISTOR	2SC4211-6-TL
Q411	1530003500	S.TRANSISTOR	2SC5065-O (TE85R)
Q421	1530002600	S.TRANSISTOR	2SC4215-O (TE85R)
Q501	1590000430	S.TRANSISTOR	DTC144EU T107
Q531	1530003500	S.TRANSISTOR	2SC5065-O (TE85R)
Q532	1530003500	S.TRANSISTOR	2SC5065-O (TE85R)
Q551	1530003500	S.TRANSISTOR	2SC5065-O (TE85R)
Q552	1530003500	S.TRANSISTOR	2SC5065-O (TE85R)
Q573	1510000880	S.TRANSISTOR	2SA1622-6-TL
Q574	1590000720	S.TRANSISTOR	DTA144EU T107
Q575	1590001170	S.TRANSISTOR	XP1501-(TX).AB
Q801	1530002600	S.TRANSISTOR	2SC4215-O (TE85R)
Q802	1590001170	S.TRANSISTOR	XP1501-(TX).AB
Q805	1530003280	S.TRANSISTOR	2SC4211-6-TL
Q806	1530003280	S.TRANSISTOR	2SC4211-6-TL
Q807	1590000720	S.TRANSISTOR	DTA144EU T107
Q808	1530003280	S.TRANSISTOR	2SC4211-6-TL
Q809	1590001920	S.TRANSISTOR	UN911F (TX)
Q810	1530003280	S.TRANSISTOR	2SC4211-6-TL
Q951	1530003280	S.TRANSISTOR	2SC4211-6-TL
D101	1790001280	S.DIODE	MA111 (TX)
D102	1790001280	S.DIODE	MA111 (TX)
D111	1790001280	S.DIODE	MA111 (TX)
D112	1790001280	S.DIODE	MA111 (TX)
D121	1790001280	S.DIODE	MA111 (TX)
D122	1790001280	S.DIODE	MA111 (TX)
D171	1790001280	S.DIODE	MA111 (TX)
D201	1750000370	S.DIODE	DA221 TL
D202	1750000370	S.DIODE	DA221 TL
D301	1160000140	S.DIODE	DAP222 TL
D302	1160000140	S.DIODE	DAP222 TL
D304	1160000140	S.DIODE	DAP222 TL
D305	1160000140	S.DIODE	DAP222 TL
D501	1790001290	S.VARICAP	MA304 (TX)
D571	1720000360	S.DIODE	HSU88TRF

S.=Surface mount

[MAIN UNIT]

REF NO.	ORDER NO.	DESCRIPTION	
FI11	2020001140	S.CERAMIC	SFECA10.7MA-5-A
FI101	2020001370	CERAMIC	KBF-455RS-4AS
FI111	2020001360	CERAMIC	KBF455RS-15A
FI411	2020001360	CERAMIC	KBF455RS-15A
X501	6050009930	S.XTAL	CR-553 (12.8000 MHz)
L71	6150004840	S.COIL	LS-510
L471	6150004840	S.COIL	LS-510
L501	6200003960	S.COIL	MLF1608A 1R0K-T
L502	6200003960	S.COIL	MLF1608A 1R0K-T
L531	6200005720	S.COIL	ELJRE 33NG-F
L532	6200005700	S.COIL	ELJRE 22NG-F
L533	6200005700	S.COIL	ELJRE 22NG-F
L551	6200005720	S.COIL	ELJRE 33NG-F
L552	6200005700	S.COIL	ELJRE 22NG-F
L553	6200005700	S.COIL	ELJRE 22NG-F
R1	7030003220	S.RESISTOR	ERJ3GEYJ 150 V (15 Ω)
R2	7030003220	S.RESISTOR	ERJ3GEYJ 150 V (15 Ω)
R3	7030003220	S.RESISTOR	ERJ3GEYJ 150 V (15 Ω)
R11	7030003400	S.RESISTOR	ERJ3GEYJ 471 V (470 Ω)
R15	7030003250	S.RESISTOR	ERJ3GEYJ 270 V (27 Ω)
R16	7030003370	S.RESISTOR	ERJ3GEYJ 271 V (270 Ω)
R21	7030003660	S.RESISTOR	ERJ3GEYJ 683 V (68 kΩ)
R23	7030003400	S.RESISTOR	ERJ3GEYJ 471 V (470 Ω)
R24	7030003440	S.RESISTOR	ERJ3GEYJ 102 V (1 kΩ)
R25	7030003400	S.RESISTOR	ERJ3GEYJ 471 V (470 Ω)
R71	7030003640	S.RESISTOR	ERJ3GEYJ 473 V (47 kΩ)
R72	7030003600	S.RESISTOR	ERJ3GEYJ 223 V (22 kΩ)
R73	7030003530	S.RESISTOR	ERJ3GEYJ 562 V (5.6 kΩ)
R74	7030003710	S.RESISTOR	ERJ3GEYJ 184 V (180 kΩ)
R75	7030003490	S.RESISTOR	ERJ3GEYJ 272 V (2.7 kΩ)
R76	7030003720	S.RESISTOR	ERJ3GEYJ 224 V (220 kΩ)
R77	7030003640	S.RESISTOR	ERJ3GEYJ 473 V (47 kΩ)
R78	7030003560	S.RESISTOR	ERJ3GEYJ 103 V (10 kΩ)
R79	7030003520	S.RESISTOR	ERJ3GEYJ 472 V (4.7 kΩ)
R80	7030003680	S.RESISTOR	ERJ3GEYJ 104 V (100 kΩ)
R81	7030003470	S.RESISTOR	ERJ3GEYJ 182 V (1.8 kΩ)
R101	7030003520	S.RESISTOR	ERJ3GEYJ 472 V (4.7 kΩ)
R102	7030003520	S.RESISTOR	ERJ3GEYJ 472 V (4.7 kΩ)
R103	7030003520	S.RESISTOR	ERJ3GEYJ 472 V (4.7 kΩ)
R111	7030003520	S.RESISTOR	ERJ3GEYJ 472 V (4.7 kΩ)
R112	7030003520	S.RESISTOR	ERJ3GEYJ 472 V (4.7 kΩ)
R113	7030003520	S.RESISTOR	ERJ3GEYJ 472 V (4.7 kΩ)
R121	7030003480	S.RESISTOR	ERJ3GEYJ 222 V (2.2 kΩ)
R122	7030003520	S.RESISTOR	ERJ3GEYJ 472 V (4.7 kΩ)
R151	7030003670	S.RESISTOR	ERJ3GEYJ 823 V (82 kΩ)
R152	7030003660	S.RESISTOR	ERJ3GEYJ 683 V (68 kΩ)
R153	7030003400	S.RESISTOR	ERJ3GEYJ 471 V (470 Ω)
R154	7030003440	S.RESISTOR	ERJ3GEYJ 102 V (1 kΩ)
R155	7030003520	S.RESISTOR	ERJ3GEYJ 472 V (4.7 kΩ)
R161	7030003700	S.RESISTOR	ERJ3GEYJ 154 V (150 kΩ)
R162	7030003440	S.RESISTOR	ERJ3GEYJ 102 V (1 kΩ)
R171	7030003640	S.RESISTOR	ERJ3GEYJ 473 V (47 kΩ)
R172	7030003640	S.RESISTOR	ERJ3GEYJ 473 V (47 kΩ)
R173	7030003520	S.RESISTOR	ERJ3GEYJ 472 V (4.7 kΩ)
R174	7030003580	S.RESISTOR	ERJ3GEYJ 153 V (15 kΩ)
R175	7030003560	S.RESISTOR	ERJ3GEYJ 103 V (10 kΩ)
R176	7030003560	S.RESISTOR	ERJ3GEYJ 103 V (10 kΩ)
R177	7030003600	S.RESISTOR	ERJ3GEYJ 223 V (22 kΩ)
R178	7030003680	S.RESISTOR	ERJ3GEYJ 104 V (100 kΩ)
R179	7030003520	S.RESISTOR	ERJ3GEYJ 472 V (4.7 kΩ)
R181	7030003640	S.RESISTOR	ERJ3GEYJ 473 V (47 kΩ)
R185	7030003630	S.RESISTOR	ERJ3GEYJ 393 V (39 kΩ)
R186	7030003680	S.RESISTOR	ERJ3GEYJ 104 V (100 kΩ)
R187	7030003500	S.RESISTOR	ERJ3GEYJ 332 V (3.3 kΩ)
R189	7030003500	S.RESISTOR	ERJ3GEYJ 332 V (3.3 kΩ)
R201	7030003600	S.RESISTOR	ERJ3GEYJ 223 V (22 kΩ)
R202	7030003420	S.RESISTOR	ERJ3GEYJ 681 V (680 Ω)
R203	7030003420	S.RESISTOR	ERJ3GEYJ 681 V (680 Ω)
R204	7030003440	S.RESISTOR	ERJ3GEYJ 102 V (1 kΩ)
R205	7030003440	S.RESISTOR	ERJ3GEYJ 102 V (1 kΩ)
R206	7030003440	S.RESISTOR	ERJ3GEYJ 102 V (1 kΩ)
R207	7030003440	S.RESISTOR	ERJ3GEYJ 102 V (1 kΩ)
R208	7030003560	S.RESISTOR	ERJ3GEYJ 103 V (10 kΩ)
R209	7030003640	S.RESISTOR	ERJ3GEYJ 473 V (47 kΩ)
R211	7030003460	S.RESISTOR	ERJ3GEYJ 152 V (1.5 kΩ)
R212	7030003440	S.RESISTOR	ERJ3GEYJ 102 V (1 kΩ)

[MAIN UNIT]

REF NO.	ORDER NO.	DESCRIPTION	
R214	7030003610	S.RESISTOR	ERJ3GEYJ 273 V (27 kΩ)
R215	7030003640	S.RESISTOR	ERJ3GEYJ 473 V (47 kΩ)
R216	7030003600	S.RESISTOR	ERJ3GEYJ 223 V (22 kΩ)
R301	7030003560	S.RESISTOR	ERJ3GEYJ 103 V (10 kΩ)
R302	7030003680	S.RESISTOR	ERJ3GEYJ 104 V (100 kΩ)
R303	7030003680	S.RESISTOR	ERJ3GEYJ 104 V (100 kΩ)
R304	7030003680	S.RESISTOR	ERJ3GEYJ 104 V (100 kΩ)
R321	7030003680	S.RESISTOR	ERJ3GEYJ 104 V (100 kΩ)
R351	7030003560	S.RESISTOR	ERJ3GEYJ 103 V (10 kΩ)
R352	7030003440	S.RESISTOR	ERJ3GEYJ 102 V (1 kΩ)
R353	7030003480	S.RESISTOR	ERJ3GEYJ 222 V (2.2 kΩ)
R354	7030000250	S.RESISTOR	MCR10EZHJ 82 Ω (820)
R355	7030000250	S.RESISTOR	MCR10EZHJ 82 Ω (820)
R356	7030000250	S.RESISTOR	MCR10EZHJ 82 Ω (820)
R361	7030003560	S.RESISTOR	ERJ3GEYJ 103 V (10 kΩ)
R362	7030003200	S.RESISTOR	ERJ3GEYJ 100 V (10 Ω)
R363	7030003200	S.RESISTOR	ERJ3GEYJ 100 V (10 Ω)
R411	7030003620	S.RESISTOR	ERJ3GEYJ 333 V (33 kΩ)
R412	7030003560	S.RESISTOR	ERJ3GEYJ 103 V (10 kΩ)
R415	7030003320	S.RESISTOR	ERJ3GEYJ 101 V (100 Ω)
R416	7030003460	S.RESISTOR	ERJ3GEYJ 152 V (1.5 kΩ)
R417	7030003460	S.RESISTOR	ERJ3GEYJ 152 V (1.5 kΩ)
R421	7030003720	S.RESISTOR	ERJ3GEYJ 224 V (220 kΩ)
R424	7030003460	S.RESISTOR	ERJ3GEYJ 152 V (1.5 kΩ)
R425	7030003330	S.RESISTOR	ERJ3GEYJ 121 V (120 Ω)
R472	7030003600	S.RESISTOR	ERJ3GEYJ 223 V (22 kΩ)
R473	7030003480	S.RESISTOR	ERJ3GEYJ 222 V (2.2 kΩ)
R474	7030003710	S.RESISTOR	ERJ3GEYJ 184 V (180 kΩ)
R475	7030003520	S.RESISTOR	ERJ3GEYJ 472 V (4.7 kΩ)
R476	7030003720	S.RESISTOR	ERJ3GEYJ 224 V (220 kΩ)
R477	7030003640	S.RESISTOR	ERJ3GEYJ 473 V (47 kΩ)
R478	7310003610	S.TRIMMER	EVM-1XSX50 B14 (103)
R502	7030003560	S.RESISTOR	ERJ3GEYJ 103 V (10 kΩ)
R503	7030003290	S.RESISTOR	ERJ3GEYJ 560 V (56 Ω)
R504	7030003290	S.RESISTOR	ERJ3GEYJ 560 V (56 Ω)
R511	7030003500	S.RESISTOR	ERJ3GEYJ 332 V (3.3 kΩ)
R512	7030003440	S.RESISTOR	ERJ3GEYJ 102 V (1 kΩ)
R513	7030003680	S.RESISTOR	ERJ3GEYJ 104 V (100 kΩ)
R514	7030003360	S.RESISTOR	ERJ3GEYJ 221 V (220 Ω)
R521	7030003500	S.RESISTOR	ERJ3GEYJ 332 V (3.3 kΩ)
R522	7030003440	S.RESISTOR	ERJ3GEYJ 102 V (1 kΩ)
R523	7030003360	S.RESISTOR	ERJ3GEYJ 221 V (220 Ω)
R531	7030003220	S.RESISTOR	ERJ3GEYJ 150 V (15 Ω)
R532	7030003320	S.RESISTOR	ERJ3GEYJ 101 V (100 Ω)
R533	7030003380	S.RESISTOR	ERJ3GEYJ 331 V (330 Ω)
R534	7030003640	S.RESISTOR	ERJ3GEYJ 473 V (47 kΩ)
R536	7030003400	S.RESISTOR	ERJ3GEYJ 471 V (470 Ω)
R537	7030003640	S.RESISTOR	ERJ3GEYJ 473 V (47 kΩ)
R538	7030003400	S.RESISTOR	ERJ3GEYJ 471 V (470 Ω)
R539	7030003400	S.RESISTOR	ERJ3GEYJ 471 V (470 Ω)
R551	7030003220	S.RESISTOR	ERJ3GEYJ 150 V (15 Ω)
R552	7030003320	S.RESISTOR	ERJ3GEYJ 101 V (100 Ω)
R553	7030003380	S.RESISTOR	ERJ3GEYJ 331 V (330 Ω)
R554	7030003640	S.RESISTOR	ERJ3GEYJ 473 V (47 kΩ)
R556	7030003400	S.RESISTOR	ERJ3GEYJ 471 V (470 Ω)
R557	7030003640	S.RESISTOR	ERJ3GEYJ 473 V (47 kΩ)
R558	7030003400	S.RESISTOR	ERJ3GEYJ 471 V (470 Ω)
R559	7030003400	S.RESISTOR	ERJ3GEYJ 471 V (470 Ω)
R571	7030003560	S.RESISTOR	ERJ3GEYJ 103 V (10 kΩ)
R572	7030003520	S.RESISTOR	ERJ3GEYJ 472 V (4.7 kΩ)
R801	7030003610	S.RESISTOR	ERJ3GEYJ 273 V (27 kΩ)
R803	7030003680	S.RESISTOR	ERJ3GEYJ 104 V (100 kΩ)
R804	7030003460	S.RESISTOR	ERJ3GEYJ 152 V (1.5 kΩ)
R807	7030003360	S.RESISTOR	ERJ3GEYJ 221 V (220 Ω)
R808	7030003330	S.RESISTOR	ERJ3GEYJ 121 V (120 Ω)
R811	7030003740	S.RESISTOR	ERJ3GEYJ 334 V (330 kΩ)
R812	7030003460	S.RESISTOR	ERJ3GEYJ 152 V (1.5 kΩ)
R814	7030003680	S.RESISTOR	ERJ3GEYJ 104 V (100 kΩ)
R815	7030003440	S.RESISTOR	ERJ3GEYJ 102 V (1 kΩ)
R816	7030003700	S.RESISTOR	ERJ3GEYJ 154 V (150 kΩ)
R817	7030003680	S.RESISTOR	ERJ3GEYJ 104 V (100 kΩ)
R819	7030003520	S.RESISTOR	ERJ3GEYJ 472 V (4.7 kΩ)
R820	7030003610	S.RESISTOR	ERJ3GEYJ 273 V (27 kΩ)
R821	7030003600	S.RESISTOR	ERJ3GEYJ 223 V (22 kΩ)
R822	7030003380	S.RESISTOR	ERJ3GEYJ 331 V (330 Ω)
R825	7030003440	S.RESISTOR	ERJ3GEYJ 102 V (1 kΩ)
R826	7030003560	S.RESISTOR	ERJ3GEYJ 103 V (10 kΩ)
R827	7030003680	S.RESISTOR	ERJ3GEYJ 104 V (100 kΩ)
R828	7030003740	S.RESISTOR	ERJ3GEYJ 334 V (330 kΩ)
R829	7030003640	S.RESISTOR	ERJ3GEYJ 473 V (47 kΩ)
R830	7030003600	S.RESISTOR	ERJ3GEYJ 223 V (22 kΩ)
R831	7030003680	S.RESISTOR	ERJ3GEYJ 104 V (100 kΩ)

S.=Surface mount

[MAIN UNIT]

REF NO.	ORDER NO.	DESCRIPTION	
R951	7030003720	S.RESISTOR	ERJ3GEYJ 224 V (220 kΩ)
R953	7030003400	S.RESISTOR	ERJ3GEYJ 471 V (470 Ω)
R954	7030003320	S.RESISTOR	ERJ3GEYJ 101 V (100 Ω)
C1	4030006860	S.CERAMIC	C1608 JB 1H 102K-T-A
C2	4030006860	S.CERAMIC	C1608 JB 1H 102K-T-A
C11	4030006860	S.CERAMIC	C1608 JB 1H 102K-T-A
C12	4030006860	S.CERAMIC	C1608 JB 1H 102K-T-A
C13	4030006900	S.CERAMIC	C1608 JB 1E 103K-T-A
C15	4030006900	S.CERAMIC	C1608 JB 1E 103K-T-A
C21	4030006900	S.CERAMIC	C1608 JB 1E 103K-T-A
C23	4030006900	S.CERAMIC	C1608 JB 1E 103K-T-A
C24	4030006900	S.CERAMIC	C1608 JB 1E 103K-T-A
C25	4030006900	S.CERAMIC	C1608 JB 1E 103K-T-A
C25	4030006900	S.CERAMIC	C1608 JB 1E 103K-T-A
C71	4030006900	S.CERAMIC	C1608 JB 1E 103K-T-A
C72	4030006900	S.CERAMIC	C1608 JB 1E 103K-T-A
C73	4030007070	S.CERAMIC	C1608 CH 1H 330J-T-A
C74	4030011600	S.CERAMIC	C1608 JB 1C 104KT-N
C75	4030006860	S.CERAMIC	C1608 JB 1H 102K-T-A
C76	4030006860	S.CERAMIC	C1608 JB 1H 102K-T-A
C77	4030006860	S.CERAMIC	C1608 JB 1H 102K-T-A
C78	4030006860	S.CERAMIC	C1608 JB 1H 102K-T-A
C79	4030011600	S.CERAMIC	C1608 JB 1C 104KT-N
C80	4030011600	S.CERAMIC	C1608 JB 1C 104KT-N
C81	4030006900	S.CERAMIC	C1608 JB 1E 103K-T-A
C82	4030006900	S.CERAMIC	C1608 JB 1E 103K-T-A
C83	4030006900	S.CERAMIC	C1608 JB 1E 103K-T-A
C84	4510006120	S.ELECTROLYTIC	ECEV1ES4R7SR
C85	4550006320	S.TANTALUM	ECST0JY475R
C86	4030011600	S.CERAMIC	C1608 JB 1C 104KT-N
C87	4030006900	S.CERAMIC	C1608 JB 1E 103K-T-A
C88	4030006900	S.CERAMIC	C1608 JB 1E 103K-T-A
C89	4030008920	S.CERAMIC	C1608 JB 1C 473K-T-A
C90	4030008920	S.CERAMIC	C1608 JB 1C 473K-T-A
C91	4550006680	S.TANTALUM	ECST0JY156R
C101	4030006900	S.CERAMIC	C1608 JB 1E 103K-T-A
C102	4030006900	S.CERAMIC	C1608 JB 1E 103K-T-A
C103	4030006900	S.CERAMIC	C1608 JB 1E 103K-T-A
C104	4030011600	S.CERAMIC	C1608 JB 1C 104KT-N
C111	4030006900	S.CERAMIC	C1608 JB 1E 103K-T-A
C112	4030006900	S.CERAMIC	C1608 JB 1E 103K-T-A
C113	4030006900	S.CERAMIC	C1608 JB 1E 103K-T-A
C114	4030006900	S.CERAMIC	C1608 JB 1E 103K-T-A
C121	4030011600	S.CERAMIC	C1608 JB 1C 104KT-N
C151	4030011600	S.CERAMIC	C1608 JB 1C 104KT-N
C152	4030011600	S.CERAMIC	C1608 JB 1C 104KT-N
C153	4030011600	S.CERAMIC	C1608 JB 1C 104KT-N
C154	4030006900	S.CERAMIC	C1608 JB 1E 103K-T-A
C161	4030007130	S.CERAMIC	C1608 CH 1H 101J-T-A
C162	4030011600	S.CERAMIC	C1608 JB 1C 104KT-N
C163	4030011600	S.CERAMIC	C1608 JB 1C 104KT-N
C171	4030011600	S.CERAMIC	C1608 JB 1C 104KT-N
C172	4030006900	S.CERAMIC	C1608 JB 1E 103K-T-A
C173	4510006120	S.ELECTROLYTIC	ECEV1ES4R7SR
C174	4030011600	S.CERAMIC	C1608 JB 1C 104KT-N
C176	4550006130	S.TANTALUM	ECST1VY224R
C177	4030006900	S.CERAMIC	C1608 JB 1E 103K-T-A
C178	4030006900	S.CERAMIC	C1608 JB 1E 103K-T-A
C181	4510006120	S.ELECTROLYTIC	ECEV1ES4R7SR
C184	4030011600	S.CERAMIC	C1608 JB 1C 104KT-N
C185	4510006120	S.ELECTROLYTIC	ECEV1ES4R7SR
C186	4510006120	S.ELECTROLYTIC	ECEV1ES4R7SR
C187	4030006900	S.CERAMIC	C1608 JB 1E 103K-T-A
C202	4030006900	S.CERAMIC	C1608 JB 1E 103K-T-A
C203	4030006900	S.CERAMIC	C1608 JB 1E 103K-T-A
C204	4030006900	S.CERAMIC	C1608 JB 1E 103K-T-A
C205	4030006900	S.CERAMIC	C1608 JB 1E 103K-T-A
C206	4030006860	S.CERAMIC	C1608 JB 1H 102K-T-A
C207	4030008900	S.CERAMIC	C1608 JB 1C 333K-T-A
C208	4030006900	S.CERAMIC	C1608 JB 1E 103K-T-A
C209	4030006900	S.CERAMIC	C1608 JB 1E 103K-T-A
C210	4550006680	S.TANTALUM	ECST0JY156R
C211	4030006850	S.CERAMIC	C1608 JB 1H 471K-T-A
C302	4030006900	S.CERAMIC	C1608 JB 1E 103K-T-A
C303	4030006900	S.CERAMIC	C1608 JB 1E 103K-T-A
C304	4030006900	S.CERAMIC	C1608 JB 1E 103K-T-A
C351	4510004650	S.ELECTROLYTIC	ECEV1EA4R7SR
C352	4030006900	S.CERAMIC	C1608 JB 1E 103K-T-A
C353	4510006220	S.ELECTROLYTIC	ECEV1CA101UP
C354	4030006900	S.CERAMIC	C1608 JB 1E 103K-T-A

[MAIN UNIT]

REF NO.	ORDER NO.	DESCRIPTION	
C355	4510006220	S.ELECTROLYTIC	ECEV1CA101UP
C361	4030008920	S.CERAMIC	C1608 JB 1C 473K-T-A
C362	4030007090	S.CERAMIC	C1608 CH 1H 470J-T-A
C363	4550006320	S.TANTALUM	ECST0JY475R
C364	4030011600	S.CERAMIC	C1608 JB 1C 104KT-N
C365	4510005370	S.ELECTROLYTIC	ECEV1AA221P
C411	4030007130	S.CERAMIC	C1608 CH 1H 101J-T-A
C412	4030009500	S.CERAMIC	C1608 CH 1H 0R5B-T-A
C413	4030011600	S.CERAMIC	C1608 JB 1C 104KT-N
C414	4030011600	S.CERAMIC	C1608 JB 1C 104KT-N
C416	4030011600	S.CERAMIC	C1608 JB 1C 104KT-N
C421	4030011600	S.CERAMIC	C1608 JB 1C 104KT-N
C423	4030011600	S.CERAMIC	C1608 JB 1C 104KT-N
C424	4030011600	S.CERAMIC	C1608 JB 1C 104KT-N
C471	4030006900	S.CERAMIC	C1608 JB 1E 103K-T-A
C473	4030007010	S.CERAMIC	C1608 CH 1H 100D-T-A
C474	4030011600	S.CERAMIC	C1608 JB 1C 104KT-N
C475	4030006860	S.CERAMIC	C1608 JB 1H 102K-T-A
C476	4030006860	S.CERAMIC	C1608 JB 1H 102K-T-A
C477	4030006860	S.CERAMIC	C1608 JB 1H 102K-T-A
C478	4030006860	S.CERAMIC	C1608 JB 1H 102K-T-A
C479	4030006900	S.CERAMIC	C1608 JB 1E 103K-T-A
C480	4030006900	S.CERAMIC	C1608 JB 1E 103K-T-A
C481	4030011600	S.CERAMIC	C1608 JB 1C 104KT-N
C482	4030006900	S.CERAMIC	C1608 JB 1E 103K-T-A
C483	4030006900	S.CERAMIC	C1608 JB 1E 103K-T-A
C489	4030011600	S.CERAMIC	C1608 JB 1C 104KT-N
C501	4030007080	S.CERAMIC	C1608 CH 1H 390J-T-A
C503	4610001890	S.TRIMMER	CTZ3E-20C-W1
C504	4030007080	S.CERAMIC	C1608 CH 1H 390J-T-A
C505	4030006900	S.CERAMIC	C1608 JB 1E 103K-T-A
C506	4030006860	S.CERAMIC	C1608 JB 1H 102K-T-A
C507	4030006860	S.CERAMIC	C1608 JB 1H 102K-T-A
C509	4030006860	S.CERAMIC	C1608 JB 1H 102K-T-A
C510	4030006860	S.CERAMIC	C1608 JB 1H 102K-T-A
C511	4550006150	S.TANTALUM	ECST1CY105R
C512	4550006360	S.TANTALUM	ECST1VY104R
C513	4030009920	S.CERAMIC	C1608 CH 1H 050B-T-A
C521	4550006150	S.TANTALUM	ECST1CY105R
C522	4550006360	S.TANTALUM	ECST1VY104R
C523	4030006860	S.CERAMIC	C1608 JB 1H 102K-T-A
C531	4030006860	S.CERAMIC	C1608 JB 1H 102K-T-A
C532	4030006860	S.CERAMIC	C1608 JB 1H 102K-T-A
C533	4030006860	S.CERAMIC	C1608 JB 1H 102K-T-A
C534	4030006860	S.CERAMIC	C1608 JB 1H 102K-T-A
C536	4030006860	S.CERAMIC	C1608 JB 1H 102K-T-A
C537	4030006860	S.CERAMIC	C1608 JB 1H 102K-T-A
C538	4030006860	S.CERAMIC	C1608 JB 1H 102K-T-A
C539	4030009920	S.CERAMIC	C1608 CH 1H 050B-T-A
C540	4030006980	S.CERAMIC	C1608 CH 1H 070D-T-A
C551	4030006860	S.CERAMIC	C1608 JB 1H 102K-T-A
C552	4030009920	S.CERAMIC	C1608 CH 1H 050B-T-A
C553	4030006860	S.CERAMIC	C1608 JB 1H 102K-T-A
C554	4030006860	S.CERAMIC	C1608 JB 1H 102K-T-A
C556	4030006860	S.CERAMIC	C1608 JB 1H 102K-T-A
C557	4030006860	S.CERAMIC	C1608 JB 1H 102K-T-A
C558	4030006860	S.CERAMIC	C1608 JB 1H 102K-T-A
C559	4030006980	S.CERAMIC	C1608 CH 1H 070D-T-A
C560	4030006860	S.CERAMIC	C1608 JB 1H 102K-T-A
C571	4550006200	S.TANTALUM	ECST0JY106R
C573	4550006200	S.TANTALUM	ECST0JY106R
C574	4030006860	S.CERAMIC	C1608 JB 1H 102K-T-A
C801	4030006900	S.CERAMIC	C1608 JB 1E 103K-T-A
C802	4030006860	S.CERAMIC	C1608 JB 1H 102K-T-A
C806	4030006900	S.CERAMIC	C1608 JB 1E 103K-T-A
C808	4030006900	S.CERAMIC	C1608 JB 1E 103K-T-A
C809	4030006900	S.CERAMIC	C1608 JB 1E 103K-T-A
C810	4030006900	S.CERAMIC	C1608 JB 1E 103K-T-A
C811	4030006860	S.CERAMIC	C1608 JB 1H 102K-T-A
C812	4030011600	S.CERAMIC	C1608 JB 1C 104KT-N
C813	4030011600	S.CERAMIC	C1608 JB 1C 104KT-N
C814	4550006140	S.TANTALUM	ECST1EY474R
C815	4030006900	S.CERAMIC	C1608 JB 1E 103K-T-A
C816	4030006900	S.CERAMIC	C1608 JB 1E 103K-T-A
C817	4550006320	S.TANTALUM	ECST0JY475R
C901	4030006860	S.CERAMIC	C1608 JB 1H 102K-T-A
C902	4030007090	S.CERAMIC	C1608 CH 1H 470J-T-A
C903	4030007090	S.CERAMIC	C1608 CH 1H 470J-T-A
C951	4030011600	S.CERAMIC	C1608 JB 1C 104KT-N
C952	4030011600	S.CERAMIC	C1608 JB 1C 104KT-N
C953	4030011600	S.CERAMIC	C1608 JB 1C 104KT-N

S.=Surface mount

[MAIN UNIT]

REF NO.	ORDER NO.	DESCRIPTION	
S1	2230000900	S.SWITCH	JPM1990-2013R
J1	6510017680	S.CONNECTOR	IL-FPR-38S-HF-E3000
J2	6510020120	S.CONNECTOR	AXK6S40545P
J3	6450001690	CONNECTOR	HSJ1456-01-220
W420	7030003860	S.JUMPER	ERJ3GE JPW V
W421	7030003860	S.JUMPER	ERJ3GE JPW V
W551	7030003860	S.JUMPER	ERJ3GE JPW V
W801	7030003860	S.JUMPER	ERJ3GE JPW V
EP1	0910048035	PCB	B 4900E

[2ND VCO UNIT]

REF NO.	ORDER NO.	DESCRIPTION	
Q601	1590000430	S.TRANSISTOR	DTC144EU T107
Q602	1530002920	S.TRANSISTOR	2SC4226-T2 R25
Q603	1530002920	S.TRANSISTOR	2SC4226-T2 R25
Q604	1530002920	S.TRANSISTOR	2SC4226-T2 R25
Q701	1590000430	S.TRANSISTOR	DTC144EU T107
Q702	1530002920	S.TRANSISTOR	2SC4226-T2 R25
Q703	1530002920	S.TRANSISTOR	2SC4226-T2 R25
Q704	1530002920	S.TRANSISTOR	2SC4226-T2 R25
D601	1720000370	S.VARICAP	HVU350TRF
D602	1790000620	S.DIODE	MA77 (TW)
D701	1720000370	S.VARICAP	HVU350TRF
D702	1790000620	S.DIODE	MA77 (TW)
L601	6200004480	S.COIL	MLF1608D R82K-T
L602	6200002360	S.COIL	LQN 1A 33NJ04
L603	6200005720	S.COIL	ELJRE 33NG-F
L701	6200004480	S.COIL	MLF1608D R82K-T
L702	6200002360	S.COIL	LQN 1A 33NJ04
L703	6200005720	S.COIL	ELJRE 33NG-F
R601	7030003360	S.RESISTOR	ERJ3GEYJ 221 V (220 Ω)
R602	7030003460	S.RESISTOR	ERJ3GEYJ 152 V (1.5 kΩ)
R603	7030003540	S.RESISTOR	ERJ3GEYJ 682 V (6.8 kΩ)
R604	7030003310	S.RESISTOR	ERJ3GEYJ 820 V (82 Ω)
R605	7030003550	S.RESISTOR	ERJ3GEYJ 822 V (8.2 kΩ)
R606	7030003350	S.RESISTOR	ERJ3GEYJ 181 V (180 Ω)
R608	7030003720	S.RESISTOR	ERJ3GEYJ 224 V (220 kΩ)
R610	7030003720	S.RESISTOR	ERJ3GEYJ 224 V (220 kΩ)
R611	7030003400	S.RESISTOR	ERJ3GEYJ 471 V (470 Ω)
R701	7030003360	S.RESISTOR	ERJ3GEYJ 221 V (220 Ω)
R702	7030003460	S.RESISTOR	ERJ3GEYJ 152 V (1.5 kΩ)
R703	7030003540	S.RESISTOR	ERJ3GEYJ 682 V (6.8 kΩ)
R704	7030003310	S.RESISTOR	ERJ3GEYJ 820 V (82 Ω)
R705	7030003550	S.RESISTOR	ERJ3GEYJ 822 V (8.2 kΩ)
R706	7030003350	S.RESISTOR	ERJ3GEYJ 181 V (180 Ω)
R708	7030003720	S.RESISTOR	ERJ3GEYJ 224 V (220 kΩ)
R710	7030003720	S.RESISTOR	ERJ3GEYJ 224 V (220 kΩ)
R711	7030003400	S.RESISTOR	ERJ3GEYJ 471 V (470 Ω)
C601	4030007040	S.CERAMIC	C1608 CH 1H 180J-T-A
C602	4030007110	S.CERAMIC	C1608 CH 1H 680J-T-A
C603	4030009520	S.CERAMIC	C1608 CH 1H 020B-T-A
C604	4030006860	S.CERAMIC	C1608 JB 1H 102K-T-A
C605	4030006860	S.CERAMIC	C1608 JB 1H 102K-T-A
C606	4030009520	S.CERAMIC	C1608 CH 1H 020B-T-A
C607	4030009520	S.CERAMIC	C1608 CH 1H 020B-T-A
C608	4030006860	S.CERAMIC	C1608 JB 1H 102K-T-A
C609	4030006860	S.CERAMIC	C1608 JB 1H 102K-T-A
C610	4030006860	S.CERAMIC	C1608 JB 1H 102K-T-A
C612	4030006860	S.CERAMIC	C1608 JB 1H 102K-T-A
C613	4030006860	S.CERAMIC	C1608 JB 1H 102K-T-A
C614	4030006860	S.CERAMIC	C1608 JB 1H 102K-T-A
C701	4030007040	S.CERAMIC	C1608 CH 1H 180J-T-A

[2ND VCO UNIT]

REF NO.	ORDER NO.	DESCRIPTION	
C702	4030007110	S.CERAMIC	C1608 CH 1H 680J-T-A
C703	4030009520	S.CERAMIC	C1608 CH 1H 020B-T-A
C704	4030006860	S.CERAMIC	C1608 JB 1H 102K-T-A
C705	4030006860	S.CERAMIC	C1608 JB 1H 102K-T-A
C706	4030009520	S.CERAMIC	C1608 CH 1H 020B-T-A
C707	4030009520	S.CERAMIC	C1608 CH 1H 020B-T-A
C708	4030006860	S.CERAMIC	C1608 JB 1H 102K-T-A
C709	4030006860	S.CERAMIC	C1608 JB 1H 102K-T-A
C710	4030006860	S.CERAMIC	C1608 JB 1H 102K-T-A
C712	4030006860	S.CERAMIC	C1608 JB 1H 102K-T-A
C713	4030006860	S.CERAMIC	C1608 JB 1H 102K-T-A
C714	4030006860	S.CERAMIC	C1608 JB 1H 102K-T-A
J601	6910010830	CONNECTOR	IMSA-9230B-1-08Z014-T
W601	7030003860	S.JUMPER	ERJ3GE JPW V
W701	7030003860	S.JUMPER	ERJ3GE JPW V
EP1	0910048062	PCB	B 4903B

[RF UNIT]

REF NO.	ORDER NO.	DESCRIPTION	
IC1	1130007510	S.IC	BU4094BCFV-E1
IC2	1130007510	S.IC	BU4094BCFV-E1
IC271	1110004020	S.IC	μPC2757T-E3
IC501	1130008390	S.IC	HD155001BTEL
Q1	1530003280	S.TRANSISTOR	2SC4211-6-TL
Q2	1590000720	S.TRANSISTOR	DTA144EU T107
Q3	1590001810	S.TRANSISTOR	XP1113 (TX)
Q4	1590001810	S.TRANSISTOR	XP1113 (TX)
Q5	1590002010	S.TRANSISTOR	XP1114 (TX)
Q8	1590002010	S.TRANSISTOR	XP1114 (TX)
Q14	1590000430	S.TRANSISTOR	DTC144EU T107
Q51	1530002600	S.TRANSISTOR	2SC4215-O (TE85R)
Q151	1580000690	S.FET	3SK291 (TE85R)
Q171	1580000690	S.FET	3SK291 (TE85R)
Q211	1580000710	S.FET	3SK274 (TE85R)
Q231	1580000710	S.FET	3SK274 (TE85R)
Q253	1590000720	S.TRANSISTOR	DTA144EU T107
Q401	1590000430	S.TRANSISTOR	DTC144EU T107
Q411	1590000430	S.TRANSISTOR	DTC144EU T107
Q412	1590000720	S.TRANSISTOR	DTA144EU T107
Q421	1530002920	S.TRANSISTOR	2SC4226-T2 R25
Q502	1560000540	S.FET	2SK880-Y (TE85R)
Q521	1560000540	S.FET	2SK880-Y (TE85R)
Q522	1530003280	S.TRANSISTOR	2SC4211-6-TL
Q531	1530003280	S.TRANSISTOR	2SC4211-6-TL
Q541	1590001170	S.TRANSISTOR	XP1501-(TX).AB
Q542	1590001810	S.TRANSISTOR	XP1113 (TX)
Q543	1590000720	S.TRANSISTOR	DTA144EU T107
Q544	1510000880	S.TRANSISTOR	2SA1622-6-TL
Q551	1530002900	S.TRANSISTOR	2SC4228-T2 R45
Q552	1530002900	S.TRANSISTOR	2SC4228-T2 R45
Q901	1530003280	S.TRANSISTOR	2SC4211-6-TL
D1	1720000240	S.DIODE	1SV172 (TE85R)
D2	1790000620	S.DIODE	MA77(TW)
D51	1750000530	S.DIODE	1SV271 (TPH3)
D52	1790000620	S.DIODE	MA77(TW)
D53	1790000620	S.DIODE	MA77(TW)
D61	1790000620	S.DIODE	MA77(TW)
D81	1790000620	S.DIODE	MA77(TW)
D82	1790000620	S.DIODE	MA77(TW)
D101	1790000620	S.DIODE	MA77(TW)
D102	1790000620	S.DIODE	MA77(TW)
D121	1790000620	S.DIODE	MA77(TW)
D122	1790000620	S.DIODE	MA77(TW)
D151	1750000530	S.DIODE	1SV271 (TPH3)
D152	1720000660	S.VARICAP	1SV288 (TPH2)
D153	1720000660	S.VARICAP	1SV288 (TPH2)

S.=Surface mount

[RF UNIT]

REF NO.	ORDER NO.	DESCRIPTION	
D154	1750000530	S.DIODE	1SV271 (TPH3)
D171	1750000530	S.DIODE	1SV271 (TPH3)
D172	1720000650	S.VARICAP	1SV286 (TPH3)
D173	1720000650	S.VARICAP	1SV286 (TPH3)
D174	1750000530	S.DIODE	1SV271 (TPH3)
D211	1750000530	S.DIODE	1SV271 (TPH3)
D213	1720000400	S.VARICAP	1SV245 (TPH3)
D214	1720000400	S.VARICAP	1SV245 (TPH3)
D216	1790000620	S.DIODE	MA77 (TW)
D231	1790000620	S.DIODE	MA77 (TW)
D236	1790000620	S.DIODE	MA77 (TW)
D238	1720000470	S.VARICAP	1SV239 (TPH3)
D253	1750000530	S.DIODE	1SV271 (TPH3)
D401	1790000620	S.DIODE	MA77 (TW)
D402	1790000620	S.DIODE	MA77 (TW)
D411	1790000620	S.DIODE	MA77 (TW)
D412	1790000620	S.DIODE	MA77 (TW)
D541	1720000360	S.DIODE	HSU88TRF
D901	1790000670	S.DIODE	SB07-03C-TB
FI401	2040001200	S.SAW	EFCH266MKQP1
FI411	2040001190	S.SAW	EFCH429MKQP1
X501	6050009940	S.XTAL	CR-555 (10.24500 MHz)
L51	6200004720	S.COIL	MLF1608D R10K-T
L52	6200004470	S.COIL	MLF1608D R12K-T
L54	6200002040	S.COIL	NL 252018T-101J
L55	6200006970	S.COIL	MLF1608A 3R9K-T
L56	6200003550	S.COIL	MLF1608A 4R7K-T
L61	6200004940	S.COIL	MLF1608D R27K-T
L62	6200005140	S.COIL	MLF1608D R33K-T
L81	6200003550	S.COIL	MLF1608A 4R7K-T
L82	6200006970	S.COIL	MLF1608A 3R9K-T
L83	6200006970	S.COIL	MLF1608A 3R9K-T
L91	6200004790	S.COIL	MLF1608D R47K-T
L92	6200003630	S.COIL	MLF1608D R68K-T
L101	6200005190	S.COIL	MLF1608D R56K-T
L102	6200004790	S.COIL	MLF1608D R47K-T
L103	6200004790	S.COIL	MLF1608D R47K-T
L122	6200003540	S.COIL	MLF1608D R22K-T
L123	6200004940	S.COIL	MLF1608D R27K-T
L151	6200007110	S.COIL	ELJND 39NJ
L152	6200007110	S.COIL	ELJND 39NJ
L153	6200007120	S.COIL	ELJND 1R0J 1U
L154	6200007110	S.COIL	ELJND 39NJ
L155	6200007110	S.COIL	ELJND 39NJ
L156	6200007050	S.COIL	ELJND 27NKF
L171	6200007210	S.COIL	ELJND 10NKF
L172	6200007100	S.COIL	ELJND 8N2NKF
L174	6200007210	S.COIL	ELJND 10NKF
L175	6200007100	S.COIL	ELJND 8N2NKF
L176	6200005620	S.COIL	ELJRE 4N7Z-F
L177	6200005620	S.COIL	ELJRE 4N7Z-F
L211	6200004720	S.COIL	MLF1608D R10K-T
L212	6200005640	S.COIL	ELJRE 6N8Z-F
L213	6200005640	S.COIL	ELJRE 6N8Z-F
L214	6200005640	S.COIL	ELJRE 6N8Z-F
L215	6200007130	S.COIL	ELJND R15J 0.15U
L216	6200005640	S.COIL	ELJRE 6N8Z-F
L217	6200005640	S.COIL	ELJRE 6N8Z-F
L218	6200005640	S.COIL	ELJRE 6N8Z-F
L219	6200004720	S.COIL	MLF1608D R10K-T
L232	6200005670	S.COIL	ELJRE 12NG-F
L233	6200005650	S.COIL	ELJRE 8N2Z-F
L234	6200005690	S.COIL	ELJRE 18NG-F
L235	6200005590	S.COIL	ELJRE 2N7Z-F
L239	6200004720	S.COIL	MLF1608D R10K-T
L240	6200005590	S.COIL	ELJRE 2N7Z-F
L252	6200004600	S.COIL	MLF1608D R15K-T
L253	6200004600	S.COIL	MLF1608D R15K-T
L401	6200003550	S.COIL	MLF1608A 4R7K-T
L402	6200005700	S.COIL	ELJRE 22NG-F
L403	6200005730	S.COIL	ELJRE 39NG-F
L404	6200005740	S.COIL	ELJRE 47NG-F
L411	6200003550	S.COIL	MLF1608A 4R7K-T
L412	6200005640	S.COIL	ELJRE 6N8Z-F
L413	6200005680	S.COIL	ELJRE 15NG-F
L415	6200005700	S.COIL	ELJRE 22NG-F

[RF UNIT]

REF NO.	ORDER NO.	DESCRIPTION	
L420	6200005670	S.COIL	ELJRE 12NG-F
L511	6200003550	S.COIL	MLF1608A 4R7K-T
L541	6200004600	S.COIL	MLF1608D R15K-T
L542	6200004600	S.COIL	MLF1608D R15K-T
R2	7030003310	S.RESISTOR	ERJ3GEYJ 820 V (82 Ω)
R3	7030003380	S.RESISTOR	ERJ3GEYJ 331 V (330 Ω)
R4	7030003310	S.RESISTOR	ERJ3GEYJ 820 V (82 Ω)
R5	7030003490	S.RESISTOR	ERJ3GEYJ 272 V (2.7 kΩ)
R6	7030003490	S.RESISTOR	ERJ3GEYJ 272 V (2.7 kΩ)
R7	7030003560	S.RESISTOR	ERJ3GEYJ 103 V (10 kΩ)
R8	7030003440	S.RESISTOR	ERJ3GEYJ 102 V (1 kΩ)
R9	7030003680	S.RESISTOR	ERJ3GEYJ 104 V (100 kΩ)
R11	7210002930	VARIABLE	RV-311
R51	7030003660	S.RESISTOR	ERJ3GEYJ 683 V (68 kΩ)
R53	7030003320	S.RESISTOR	ERJ3GEYJ 101 V (100 Ω)
R55	7030003400	S.RESISTOR	ERJ3GEYJ 471 V (470 Ω)
R80	7030003400	S.RESISTOR	ERJ3GEYJ 471 V (470 Ω)
R100	7030003400	S.RESISTOR	ERJ3GEYJ 471 V (470 Ω)
R120	7030003400	S.RESISTOR	ERJ3GEYJ 471 V (470 Ω)
R121	7030003400	S.RESISTOR	ERJ3GEYJ 471 V (470 Ω)
R151	7030003680	S.RESISTOR	ERJ3GEYJ 104 V (100 kΩ)
R152	7030003640	S.RESISTOR	ERJ3GEYJ 473 V (47 kΩ)
R153	7030003660	S.RESISTOR	ERJ3GEYJ 683 V (68 kΩ)
R154	7030003320	S.RESISTOR	ERJ3GEYJ 101 V (100 Ω)
R155	7030003320	S.RESISTOR	ERJ3GEYJ 101 V (100 Ω)
R156	7030003680	S.RESISTOR	ERJ3GEYJ 104 V (100 kΩ)
R171	7030003680	S.RESISTOR	ERJ3GEYJ 104 V (100 kΩ)
R172	7030003660	S.RESISTOR	ERJ3GEYJ 683 V (68 kΩ)
R173	7030003640	S.RESISTOR	ERJ3GEYJ 473 V (47 kΩ)
R174	7030003320	S.RESISTOR	ERJ3GEYJ 101 V (100 Ω)
R175	7030003320	S.RESISTOR	ERJ3GEYJ 101 V (100 Ω)
R176	7030003680	S.RESISTOR	ERJ3GEYJ 104 V (100 kΩ)
R177	7030003440	S.RESISTOR	ERJ3GEYJ 102 V (1 kΩ)
R212	7030003680	S.RESISTOR	ERJ3GEYJ 104 V (100 kΩ)
R213	7030003640	S.RESISTOR	ERJ3GEYJ 473 V (47 kΩ)
R215	7030003320	S.RESISTOR	ERJ3GEYJ 101 V (100 Ω)
R216	7030003320	S.RESISTOR	ERJ3GEYJ 101 V (100 Ω)
R217	7030003680	S.RESISTOR	ERJ3GEYJ 104 V (100 kΩ)
R218	7030003720	S.RESISTOR	ERJ3GEYJ 224 V (220 kΩ)
R233	7030003640	S.RESISTOR	ERJ3GEYJ 473 V (47 kΩ)
R235	7030003320	S.RESISTOR	ERJ3GEYJ 101 V (100 Ω)
R237	7030003680	S.RESISTOR	ERJ3GEYJ 104 V (100 kΩ)
R239	7030003720	S.RESISTOR	ERJ3GEYJ 224 V (220 kΩ)
R240	7030003660	S.RESISTOR	ERJ3GEYJ 683 V (68 kΩ)
R241	7030003440	S.RESISTOR	ERJ3GEYJ 102 V (1 kΩ)
R251	7030003440	S.RESISTOR	ERJ3GEYJ 102 V (1 kΩ)
R259	7030003520	S.RESISTOR	ERJ3GEYJ 472 V (4.7 kΩ)
R277	7030003520	S.RESISTOR	ERJ3GEYJ 472 V (4.7 kΩ)
R279	7030003520	S.RESISTOR	ERJ3GEYJ 472 V (4.7 kΩ)
R411	7030003680	S.RESISTOR	ERJ3GEYJ 104 V (100 kΩ)
R412	7030003680	S.RESISTOR	ERJ3GEYJ 104 V (100 kΩ)
R421	7030003520	S.RESISTOR	ERJ3GEYJ 472 V (4.7 kΩ)
R422	7030003640	S.RESISTOR	ERJ3GEYJ 473 V (47 kΩ)
R423	7030003660	S.RESISTOR	ERJ3GEYJ 683 V (68 kΩ)
R425	7030003360	S.RESISTOR	ERJ3GEYJ 221 V (220 Ω)
R501	7030003400	S.RESISTOR	ERJ3GEYJ 471 V (470 Ω)
R503	7030003520	S.RESISTOR	ERJ3GEYJ 472 V (4.7 kΩ)
R504	7030003580	S.RESISTOR	ERJ3GEYJ 153 V (15 kΩ)
R505	7030003280	S.RESISTOR	ERJ3GEYJ 470 V (47 Ω)
R506	7030003560	S.RESISTOR	ERJ3GEYJ 103 V (10 kΩ)
R521	7030003440	S.RESISTOR	ERJ3GEYJ 102 V (1 kΩ)
R522	7030003440	S.RESISTOR	ERJ3GEYJ 102 V (1 kΩ)
R523	7030003440	S.RESISTOR	ERJ3GEYJ 102 V (1 kΩ)
R524	7030003570	S.RESISTOR	ERJ3GEYJ 123 V (12 kΩ)
R525	7030003580	S.RESISTOR	ERJ3GEYJ 153 V (15 kΩ)
R526	7030003440	S.RESISTOR	ERJ3GEYJ 102 V (1 kΩ)
R527	7030003610	S.RESISTOR	ERJ3GEYJ 273 V (27 kΩ)
R529	7030003370	S.RESISTOR	ERJ3GEYJ 271 V (270 Ω)
R531	7030003620	S.RESISTOR	ERJ3GEYJ 333 V (33 kΩ)
R532	7030003640	S.RESISTOR	ERJ3GEYJ 473 V (47 kΩ)
R533	7030003440	S.RESISTOR	ERJ3GEYJ 102 V (1 kΩ)
R534	7030003360	S.RESISTOR	ERJ3GEYJ 221 V (220 Ω)
R535	7030003520	S.RESISTOR	ERJ3GEYJ 472 V (4.7 kΩ)
R541	7030003560	S.RESISTOR	ERJ3GEYJ 103 V (10 kΩ)
R542	7030003240	S.RESISTOR	ERJ3GEYJ 220 V (22 Ω)
R545	7030003520	S.RESISTOR	ERJ3GEYJ 472 V (4.7 kΩ)
R551	7030003220	S.RESISTOR	ERJ3GEYJ 150 V (15 Ω)
R552	7030003380	S.RESISTOR	ERJ3GEYJ 331 V (330 Ω)
R553	7030003400	S.RESISTOR	ERJ3GEYJ 471 V (470 Ω)
R554	7030003600	S.RESISTOR	ERJ3GEYJ 223 V (22 kΩ)

S.=Surface mount

[RF UNIT]

REF NO.	ORDER NO.	DESCRIPTION	
R556	7030003320	S.RESISTOR	ERJ3GEYJ 101 V (100 Ω)
R557	7030003600	S.RESISTOR	ERJ3GEYJ 223 V (22 kΩ)
R559	7030003320	S.RESISTOR	ERJ3GEYJ 101 V (100 Ω)
R901	7030003630	S.RESISTOR	ERJ3GEYJ 393 V (39 kΩ)
R902	7030003680	S.RESISTOR	ERJ3GEYJ 104 V (100 kΩ)
R903	7030003520	S.RESISTOR	ERJ3GEYJ 472 V (4.7 kΩ)
R904	7030003380	S.RESISTOR	ERJ3GEYJ 331 V (330 Ω)
C2	4030011600	S.CERAMIC	C1608 JB 1C 104KT-N
C4	4030011600	S.CERAMIC	C1608 JB 1C 104KT-N
C6	4030011600	S.CERAMIC	C1608 JB 1C 104KT-N
C8	4030011600	S.CERAMIC	C1608 JB 1C 104KT-N
C11	4030006860	S.CERAMIC	C1608 JB 1H 102K-T-A
C12	4030006900	S.CERAMIC	C1608 JB 1E 103K-T-A
C13	4030006900	S.CERAMIC	C1608 JB 1E 103K-T-A
C14	4030006900	S.CERAMIC	C1608 JB 1E 103K-T-A
C15	4030007090	S.CERAMIC	C1608 CH 1H 470J-T-A
C16	4030007090	S.CERAMIC	C1608 CH 1H 470J-T-A
C17	4030007090	S.CERAMIC	C1608 CH 1H 470J-T-A
C18	4030007090	S.CERAMIC	C1608 CH 1H 470J-T-A
C19	4030006860	S.CERAMIC	C1608 JB 1H 102K-T-A
C25	4030006860	S.CERAMIC	C1608 JB 1H 102K-T-A
C26	4030007090	S.CERAMIC	C1608 CH 1H 470J-T-A
C27	4030006860	S.CERAMIC	C1608 JB 1H 102K-T-A
C28	4030006860	S.CERAMIC	C1608 JB 1H 102K-T-A
C35	4030006860	S.CERAMIC	C1608 JB 1H 102K-T-A
C36	4030006860	S.CERAMIC	C1608 JB 1H 102K-T-A
C37	4030006860	S.CERAMIC	C1608 JB 1H 102K-T-A
C51	4030007060	S.CERAMIC	C1608 CH 1H 270J-T-A
C52	4030007040	S.CERAMIC	C1608 CH 1H 180J-T-A
C53	4030007100	S.CERAMIC	C1608 CH 1H 560J-T-A
C54	4030006970	S.CERAMIC	C1608 CH 1H 060D-T-A
C55	4030007080	S.CERAMIC	C1608 CH 1H 390J-T-A
C56	4030011600	S.CERAMIC	C1608 JB 1C 104KT-N
C57	4030011600	S.CERAMIC	C1608 JB 1C 104KT-N
C58	4030006860	S.CERAMIC	C1608 JB 1H 102K-T-A
C59	4030011600	S.CERAMIC	C1608 JB 1C 104KT-N
C60	4030011600	S.CERAMIC	C1608 JB 1C 104KT-N
C61	4030007120	S.CERAMIC	C1608 CH 1H 820J-T-A
C62	4030007070	S.CERAMIC	C1608 CH 1H 330J-T-A
C63	4030007150	S.CERAMIC	C1608 CH 1H 151J-T-A
C64	4030007020	S.CERAMIC	C1608 CH 1H 120J-T-A
C65	4030007130	S.CERAMIC	C1608 CH 1H 101J-T-A
C71	4030006870	S.CERAMIC	C1608 JB 1H 222K-T-A
C72	4030007160	S.CERAMIC	C1608 CH 1H 181J-T-A
C73	4030009980	S.CERAMIC	C1608 JB 1H 152K-T-A
C81	4030006870	S.CERAMIC	C1608 JB 1H 222K-T-A
C82	4030006900	S.CERAMIC	C1608 JB 1E 103K-T-A
C83	4030009980	S.CERAMIC	C1608 JB 1H 152K-T-A
C84	4030008860	S.CERAMIC	C1608 JB 1C 153K-T-A
C85	4030006870	S.CERAMIC	C1608 JB 1H 222K-T-A
C86	4030011600	S.CERAMIC	C1608 JB 1C 104KT-N
C91	4030007150	S.CERAMIC	C1608 CH 1H 151J-T-A
C92	4030007120	S.CERAMIC	C1608 CH 1H 820J-T-A
C93	4030010760	S.CERAMIC	C1608 CH 1H 331J-T-A
C94	4030007060	S.CERAMIC	C1608 CH 1H 270J-T-A
C95	4030007160	S.CERAMIC	C1608 CH 1H 181J-T-A
C101	4030007170	S.CERAMIC	C1608 CH 1H 221J-T-A
C102	4030009980	S.CERAMIC	C1608 JB 1H 152K-T-A
C103	4030007160	S.CERAMIC	C1608 CH 1H 181J-T-A
C104	4030006900	S.CERAMIC	C1608 JB 1E 103K-T-A
C105	4030006860	S.CERAMIC	C1608 JB 1H 102K-T-A
C106	4030011600	S.CERAMIC	C1608 JB 1C 104KT-N
C121	4030007170	S.CERAMIC	C1608 CH 1H 221J-T-A
C122	4030009980	S.CERAMIC	C1608 JB 1H 152K-T-A
C123	4030007110	S.CERAMIC	C1608 CH 1H 680J-T-A
C124	4030006850	S.CERAMIC	C1608 JB 1H 471K-T-A
C125	4030007140	S.CERAMIC	C1608 CH 1H 121J-T-A
C126	4030006900	S.CERAMIC	C1608 JB 1E 103K-T-A
C127	4030006900	S.CERAMIC	C1608 JB 1E 103K-T-A
C151	4030006860	S.CERAMIC	C1608 JB 1H 102K-T-A
C152	4030006860	S.CERAMIC	C1608 JB 1H 102K-T-A
C153	4030006860	S.CERAMIC	C1608 JB 1H 102K-T-A
C154	4030006860	S.CERAMIC	C1608 JB 1H 102K-T-A
C155	4030006860	S.CERAMIC	C1608 JB 1H 102K-T-A
C156	4030006860	S.CERAMIC	C1608 JB 1H 102K-T-A
C157	4030006860	S.CERAMIC	C1608 JB 1H 102K-T-A
C158	4030006860	S.CERAMIC	C1608 JB 1H 102K-T-A
C159	4030006860	S.CERAMIC	C1608 JB 1H 102K-T-A
C160	4030006860	S.CERAMIC	C1608 JB 1H 102K-T-A
C161	4030006860	S.CERAMIC	C1608 JB 1H 102K-T-A

[RF UNIT]

REF NO.	ORDER NO.	DESCRIPTION	
C162	4030006860	S.CERAMIC	C1608 JB 1H 102K-T-A
C171	4030006860	S.CERAMIC	C1608 JB 1H 102K-T-A
C172	4030006860	S.CERAMIC	C1608 JB 1H 102K-T-A
C173	4030006860	S.CERAMIC	C1608 JB 1H 102K-T-A
C174	4030006860	S.CERAMIC	C1608 JB 1H 102K-T-A
C175	4030006860	S.CERAMIC	C1608 JB 1H 102K-T-A
C176	4030006860	S.CERAMIC	C1608 JB 1H 102K-T-A
C178	4030006860	S.CERAMIC	C1608 JB 1H 102K-T-A
C180	4030006860	S.CERAMIC	C1608 JB 1H 102K-T-A
C181	4030006860	S.CERAMIC	C1608 JB 1H 102K-T-A
C182	4030006860	S.CERAMIC	C1608 JB 1H 102K-T-A
C183	4030006860	S.CERAMIC	C1608 JB 1H 102K-T-A
C184	4030006860	S.CERAMIC	C1608 JB 1H 102K-T-A
C211	4030006860	S.CERAMIC	C1608 JB 1H 102K-T-A
C213	4030006860	S.CERAMIC	C1608 JB 1H 102K-T-A
C214	4030006860	S.CERAMIC	C1608 JB 1H 102K-T-A
C215	4030006860	S.CERAMIC	C1608 JB 1H 102K-T-A
C216	4030006860	S.CERAMIC	C1608 JB 1H 102K-T-A
C217	4030006860	S.CERAMIC	C1608 JB 1H 102K-T-A
C218	4030006860	S.CERAMIC	C1608 JB 1H 102K-T-A
C219	4030006860	S.CERAMIC	C1608 JB 1H 102K-T-A
C221	4030006860	S.CERAMIC	C1608 JB 1H 102K-T-A
C222	4030006860	S.CERAMIC	C1608 JB 1H 102K-T-A
C223	4030006860	S.CERAMIC	C1608 JB 1H 102K-T-A
C224	4030006860	S.CERAMIC	C1608 JB 1H 102K-T-A
C225	4030006860	S.CERAMIC	C1608 JB 1H 102K-T-A
C226	4030006860	S.CERAMIC	C1608 JB 1H 102K-T-A
C231	4030009920	S.CERAMIC	C1608 CH 1H 050B-T-A
C232	4030007020	S.CERAMIC	C1608 CH 1H 120J-T-A
C234	4030009910	S.CERAMIC	C1608 CH 1H 040B-T-A
C235	4030006860	S.CERAMIC	C1608 JB 1H 102K-T-A
C236	4030006860	S.CERAMIC	C1608 JB 1H 102K-T-A
C237	4030006860	S.CERAMIC	C1608 JB 1H 102K-T-A
C238	4030006860	S.CERAMIC	C1608 JB 1H 102K-T-A
C242	4030006860	S.CERAMIC	C1608 JB 1H 102K-T-A
C243	4030006860	S.CERAMIC	C1608 JB 1H 102K-T-A
C244	4030006860	S.CERAMIC	C1608 JB 1H 102K-T-A
C245	4030006860	S.CERAMIC	C1608 JB 1H 102K-T-A
C246	4030006860	S.CERAMIC	C1608 JB 1H 102K-T-A
C247	4030009530	S.CERAMIC	C1608 CH 1H 030B-T-A
C248	4030007070	S.CERAMIC	C1608 CH 1H 330J-T-A
C249	4030006860	S.CERAMIC	C1608 JB 1H 102K-T-A
C251	4030011600	S.CERAMIC	C1608 JB 1C 104KT-N
C256	4030006900	S.CERAMIC	C1608 JB 1E 103K-T-A
C257	4030006860	S.CERAMIC	C1608 JB 1H 102K-T-A
C271	4030011600	S.CERAMIC	C1608 JB 1C 104KT-N
C275	4030006860	S.CERAMIC	C1608 JB 1H 102K-T-A
C276	4030006860	S.CERAMIC	C1608 JB 1H 102K-T-A
C277	4030006860	S.CERAMIC	C1608 JB 1H 102K-T-A
C401	4030009910	S.CERAMIC	C1608 CH 1H 040B-T-A
C402	4030009910	S.CERAMIC	C1608 CH 1H 040B-T-A
C403	4030011600	S.CERAMIC	C1608 JB 1C 104KT-N
C404	4030006860	S.CERAMIC	C1608 JB 1H 102K-T-A
C405	4030007090	S.CERAMIC	C1608 CH 1H 470J-T-A
C411	4030006860	S.CERAMIC	C1608 JB 1H 102K-T-A
C412	4030006860	S.CERAMIC	C1608 JB 1H 102K-T-A
C413	4030011600	S.CERAMIC	C1608 JB 1C 104KT-N
C414	4030006860	S.CERAMIC	C1608 JB 1H 102K-T-A
C415	4030009520	S.CERAMIC	C1608 CH 1H 020B-T-A
C421	4030006860	S.CERAMIC	C1608 JB 1H 102K-T-A
C422	4030006860	S.CERAMIC	C1608 JB 1H 102K-T-A
C423	4030006860	S.CERAMIC	C1608 JB 1H 102K-T-A
C424	4030006860	S.CERAMIC	C1608 JB 1H 102K-T-A
C425	4030011600	S.CERAMIC	C1608 JB 1C 104KT-N
C501	4610001890	S.TRIMMER	CTZ3E-20C-W1
C502	4030007040	S.CERAMIC	C1608 CH 1H 180J-T-A
C503	4030007070	S.CERAMIC	C1608 CH 1H 330J-T-A
C504	4030006860	S.CERAMIC	C1608 JB 1H 102K-T-A
C505	4550006320	S.TANTALUM	ECST0JY475R
C506	4030006860	S.CERAMIC	C1608 JB 1H 102K-T-A
C508	4030006900	S.CERAMIC	C1608 JB 1E 103K-T-A
C509	4030006860	S.CERAMIC	C1608 JB 1H 102K-T-A
C510	4030006860	S.CERAMIC	C1608 JB 1H 102K-T-A
C521	4030011600	S.CERAMIC	C1608 JB 1C 104KT-N
C522	4030006880	S.CERAMIC	C1608 JB 1H 472K-T-A
C523	4030006860	S.CERAMIC	C1608 JB 1H 102K-T-A
C524	4550006820	S.TANTALUM	ECST1DX106R
C525	4550006450	S.TANTALUM	ECST1EY105R
C526	4550006450	S.TANTALUM	ECST1EY105R
C527	4550006810	S.TANTALUM	ECST1VY473R
C528	4550006680	S.TANTALUM	ECST0JY156R
C529	4030006860	S.CERAMIC	C1608 JB 1H 102K-T-A

S.=Surface mount

[RF UNIT]

REF NO.	ORDER NO.	DESCRIPTION	
C531	4030009530	S.CERAMIC	C1608 CH 1H 030B-T-A
C532	4030006900	S.CERAMIC	C1608 JB 1E 103K-T-A
C533	4030006900	S.CERAMIC	C1608 JB 1E 103K-T-A
C541	4550006200	S.TANTALUM	ECST0JY106R
C544	4550006200	S.TANTALUM	ECST0JY106R
C545	4030006860	S.CERAMIC	C1608 JB 1H 102K-T-A
C546	4030006860	S.CERAMIC	C1608 JB 1H 102K-T-A
C551	4030006860	S.CERAMIC	C1608 JB 1H 102K-T-A
C552	4030006860	S.CERAMIC	C1608 JB 1H 102K-T-A
C553	4030006860	S.CERAMIC	C1608 JB 1H 102K-T-A
C554	4030006860	S.CERAMIC	C1608 JB 1H 102K-T-A
C555	4030006860	S.CERAMIC	C1608 JB 1H 102K-T-A
C556	4030006860	S.CERAMIC	C1608 JB 1H 102K-T-A
C557	4030006860	S.CERAMIC	C1608 JB 1H 102K-T-A
C901	4550006360	S.TANTALUM	ECST1VY104R
C902	4550006680	S.TANTALUM	ECST0JY156R
C904	4030006860	S.CERAMIC	C1608 JB 1H 102K-T-A
C905	4030006860	S.CERAMIC	C1608 JB 1H 102K-T-A
C906	4030006860	S.CERAMIC	C1608 JB 1H 102K-T-A
C907	4030006860	S.CERAMIC	C1608 JB 1H 102K-T-A
C908	4030006860	S.CERAMIC	C1608 JB 1H 102K-T-A
C909	4030006860	S.CERAMIC	C1608 JB 1H 102K-T-A
C910	4030006860	S.CERAMIC	C1608 JB 1H 102K-T-A
C911	4030006860	S.CERAMIC	C1608 JB 1H 102K-T-A
C912	4030006860	S.CERAMIC	C1608 JB 1H 102K-T-A
C913	4030006860	S.CERAMIC	C1608 JB 1H 102K-T-A
S11	7600000160	ENCODER	TP90N00E2014F
J3	6450001690	CONNECTOR	HSJ1456-01-220
J4	6450000870	CONNECTOR	HEC2711-01-020
J11	6510019870	S.CONNECTOR	AXK5S40045P
W50	7030003860	S.JUMPER	ERJ3GE JPW V
W241	7030003860	S.JUMPER	ERJ3GE JPW V
W242	7030003860	S.JUMPER	ERJ3GE JPW V
W270	7030003860	S.JUMPER	ERJ3GE JPW V
W421	7030003860	S.JUMPER	ERJ3GE JPW V
W541	7030003860	S.JUMPER	ERJ3GE JPW V
W901	7030003860	S.JUMPER	ERJ3GE JPW V
EP1	0910048027	PCB	B 4899G

[1ST VCO UNIT]

REF NO.	ORDER NO.	DESCRIPTION	
Q601	1530002900	S.TRANSISTOR	2SC4228-T2 R45
Q621	1530002900	S.TRANSISTOR	2SC4228-T2 R45
Q622	1530002900	S.TRANSISTOR	2SC4228-T2 R45
Q623	1590000430	S.TRANSISTOR	DTC144EU T107
Q641	1530002920	S.TRANSISTOR	2SC4226-T2 R25
Q661	1530002900	S.TRANSISTOR	2SC4228-T2 R45
D621	1720000500	S.VARICAP	1SV230(TPH3)
D622	1790000620	S.DIODE	MA77(TW)
D641	1720000400	S.VARICAP	1SV245 (TPH3)
D661	1720000400	S.VARICAP	1SV245 (TPH3)
D662	1720000400	S.VARICAP	1SV245 (TPH3)
L601	6200005650	S.COIL	ELJRE 8N2Z-F
L621	6200007190	S.COIL	NLU201205T-3N3C
L622	6200007190	S.COIL	NLU201205T-3N3C
L641	6200005100	S.COIL	NLU201205T-18NG 18N
L642	6200004480	S.COIL	MLF1608D R82K-T
L661	6200007180	S.COIL	NLU201205T-22NG
L662	6200004480	S.COIL	MLF1608D R82K-T
R601	7030003600	S.RESISTOR	ERJ3GEYJ 223 V (22 kΩ)
R602	7030003320	S.RESISTOR	ERJ3GEYJ 101 V (100 Ω)
R603	7030003280	S.RESISTOR	ERJ3GEYJ 470 V (47 Ω)

[1ST VCO UNIT]

REF NO.	ORDER NO.	DESCRIPTION	
R621	7030003540	S.RESISTOR	ERJ3GEYJ 682 V (6.8 kΩ)
R622	7030003280	S.RESISTOR	ERJ3GEYJ 470 V (47 Ω)
R623	7030003540	S.RESISTOR	ERJ3GEYJ 682 V (6.8 kΩ)
R624	7030003320	S.RESISTOR	ERJ3GEYJ 101 V (100 Ω)
R625	7030003480	S.RESISTOR	ERJ3GEYJ 222 V (2.2 kΩ)
R626	7030003680	S.RESISTOR	ERJ3GEYJ 104 V (100 kΩ)
R627	7030003460	S.RESISTOR	ERJ3GEYJ 152 V (1.5 kΩ)
R641	7030003460	S.RESISTOR	ERJ3GEYJ 152 V (1.5 kΩ)
R642	7030003280	S.RESISTOR	ERJ3GEYJ 470 V (47 Ω)
R643	7030003360	S.RESISTOR	ERJ3GEYJ 221 V (220 Ω)
R644	7030003550	S.RESISTOR	ERJ3GEYJ 822 V (8.2 kΩ)
R645	7030003520	S.RESISTOR	ERJ3GEYJ 472 V (4.7 kΩ)
R647	7030003240	S.RESISTOR	ERJ3GEYJ 220 V (22 Ω)
R661	7030003460	S.RESISTOR	ERJ3GEYJ 152 V (1.5 kΩ)
R662	7030003280	S.RESISTOR	ERJ3GEYJ 470 V (47 Ω)
R663	7030003360	S.RESISTOR	ERJ3GEYJ 221 V (220 Ω)
R664	7030003550	S.RESISTOR	ERJ3GEYJ 822 V (8.2 kΩ)
R665	7030003520	S.RESISTOR	ERJ3GEYJ 472 V (4.7 kΩ)
R666	7030003460	S.RESISTOR	ERJ3GEYJ 152 V (1.5 kΩ)
R667	7030003240	S.RESISTOR	ERJ3GEYJ 220 V (22 Ω)
C601	4030009910	S.CERAMIC	C1608 CH 1H 040B-T-A
C602	4030006860	S.CERAMIC	C1608 JB 1H 102K-T-A
C603	4030006860	S.CERAMIC	C1608 JB 1H 102K-T-A
C621	4030006860	S.CERAMIC	C1608 JB 1H 102K-T-A
C622	4030009540	S.CERAMIC	C1608 CH 1H 1R5B-T-A
C623	4030006860	S.CERAMIC	C1608 JB 1H 102K-T-A
C624	4030006860	S.CERAMIC	C1608 JB 1H 102K-T-A
C625	4030009540	S.CERAMIC	C1608 CH 1H 1R5B-T-A
C626	4030009510	S.CERAMIC	C1608 CH 1H 010B-T-A
C627	4030011600	S.CERAMIC	C1608 JB 1C 104KT-N
C628	4030006860	S.CERAMIC	C1608 JB 1H 102K-T-A
C629	4030006860	S.CERAMIC	C1608 JB 1H 102K-T-A
C644	4030006970	S.CERAMIC	C1608 CH 1H 060D-T-A
C645	4030009520	S.CERAMIC	C1608 CH 1H 020B-T-A
C646	4030009510	S.CERAMIC	C1608 CH 1H 010B-T-A
C647	4030006860	S.CERAMIC	C1608 JB 1H 102K-T-A
C648	4550006320	S.TANTALUM	ECST0JY475R
C649	4030006860	S.CERAMIC	C1608 JB 1H 102K-T-A
C650	4030006860	S.CERAMIC	C1608 JB 1H 102K-T-A
C651	4030006860	S.CERAMIC	C1608 JB 1H 102K-T-A
C664	4030009520	S.CERAMIC	C1608 CH 1H 020B-T-A
C665	4030009520	S.CERAMIC	C1608 CH 1H 020B-T-A
C666	4030009500	S.CERAMIC	C1608 CH 1H 0R5B-T-A
C667	4030006860	S.CERAMIC	C1608 JB 1H 102K-T-A
C668	4550006320	S.TANTALUM	ECST0JY475R
C669	4030006860	S.CERAMIC	C1608 JB 1H 102K-T-A
C670	4030011600	S.CERAMIC	C1608 JB 1C 104KT-N
C671	4030006860	S.CERAMIC	C1608 JB 1H 102K-T-A
J601	6910010830	CONNECTOR	IMSA-9230B-1-08Z014-T
W641	7030003860	S.JUMPER	ERJ3GE JPW V
EP1	0910048055	PCB	B 4902E

S.=Surface mount

SECTION 7 MECHANICAL PARTS AND DISASSEMBLY

7-1 CABINET PARTS

[CHASSIS PARTS]

REF. NO.	ORDER NO.	DESCRIPTION	QTY.
J 1	6510020210	BNC-R146	1
MP2	8210014041	1891 REAR PANEL-1	1
MP3	8110005950	1891 COVER	1
MP5	8930041470	1891 SP CAP	1
MP6	8930019790	891 Terminal rubber	4
MP7	8930026530	1349 A-TERMINAL	2
MP8	8930038010	1775 A-TERMINAL	1
MP9	8610009830	Knob N225(A)	1
MP10	8610010511	Knob N226(A)-1	1
MP11	8930041700	1891 A-terminal	1
MP12	8930041710	1891 B-terminal	1
MP13	8930041450	1891 FUNC button	1
MP14	8930041730	1891 FUNC Plate	1
MP15	8930042950	1891 Plate	1
MP18	8610010280	Knob N254	1
MP20	8830000570	Nut (A) FX643	2
MP21	8810008640	Screw FH B0 M2 x 4 NI-ZU (BT)	7
MP22	8810009560	Scerw FH M2 x 6 ZK (BT)	1
MP23	8810009220	Screw FH B0 M2 x 8 ZK (BT)	5
MP24	8810005700	Screw FH B0 M2 x 4 ZK	1
MP28	8830001270	Nut BNC-R146	1
MP29	8930043350	Rubber sheet (AH)	1
MP30	8930045090	Sponge (FK)	1

[LOGIC UNIT]

REF. NO.	ORDER NO.	DESCRIPTION	QTY.
W 1	8900007370	Cable OPC-720	1
DS 1	5030001490	LCD EDMCU06F00	1
SP 1	2510000960	Speaker K036NA500-26	1
MP1	8930041480	1891 10-Key	1
MP2	8210014050	1891 Reflector	1
MP3	8930042180	1891 Sheet	1
MP4	8930042640	Isolating Sheet EV	1
MP5	8510011090	1891 Coil case	1
MP6	8210014031	1891 Front panel-1 R10	1
MP7	8930041460	1891 Jack cap	1
MP10	8810008640	Screw FH B0 M2 x 4 NI-ZU (BT)	4
MP11	8310039170	1891 Window plate	1
MP14	8860001070	1891 LOGIC rug	1

[1ST VCO UNIT]

REF. NO.	ORDER NO.	DESCRIPTION	QTY.
MP1	8510010860	1891 VCO case	1
MP2	8930042920	Isolating sheet EW	1

[2ND VCO UNIT]

REF. NO.	ORDER NO.	DESCRIPTION	QTY.
MP1	8510010860	1891 VCO case	1

Screw abbreviations: FH: Flat head B0: self-tapping
NI: Nickel ZK: Black

7-2 ACCESSORIES

REF. NO.	ORDER NO.	DESCRIPTION	QTY.
BT 1	3030000420	Battery NICD CEL KR0.7AAUR SAFT	4
EP 1	Optional product	Antenna FA-B01RE	1
EP 2	Optional product	Charger BC-110A [USA]	1
	Optional product	Charger BC-110D [EUR, FRA]	1
MP1	8930039290	1757 Belt clip	1
MP2	8010011960	Strap belt HK-005	1
MP3	8810009270	Screw M3 X 4 SUS ZK	2

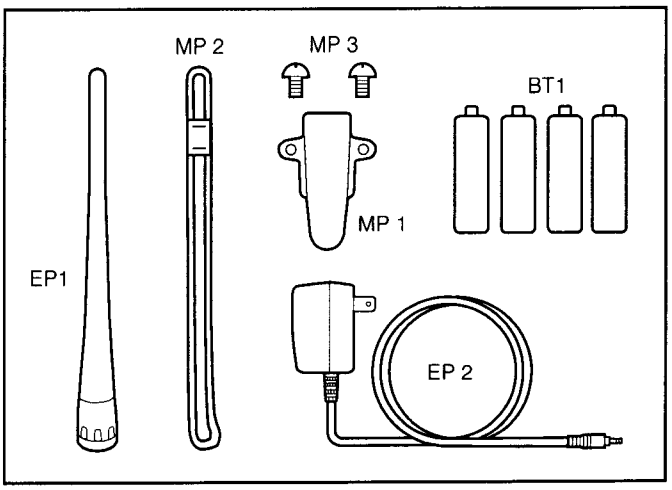

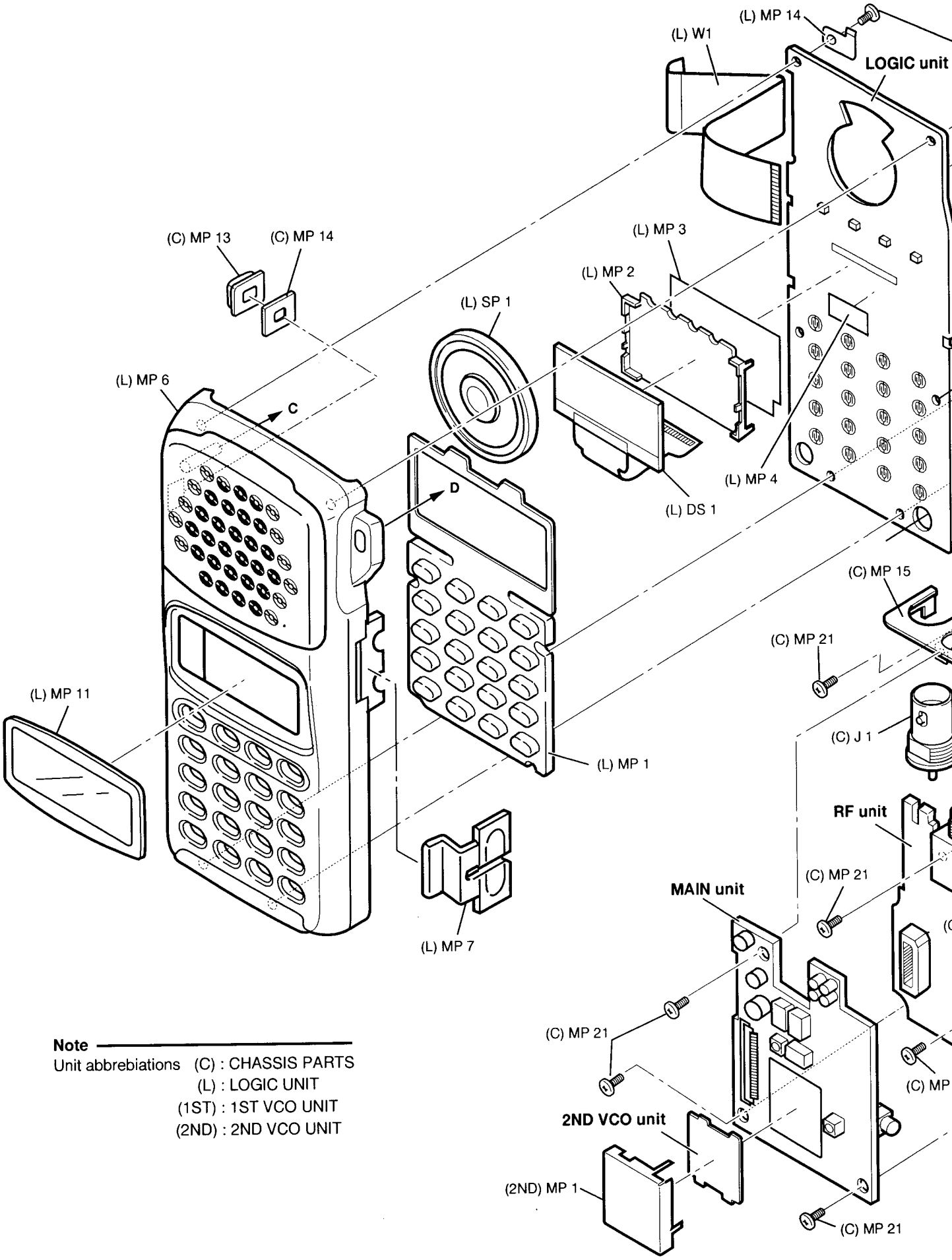

Note

Unit abbrebiations (C) : CHASSIS PARTS
(L) : LOGIC UNIT
(1ST) : 1ST VCO UNIT
(2ND) : 2ND VCO UNIT

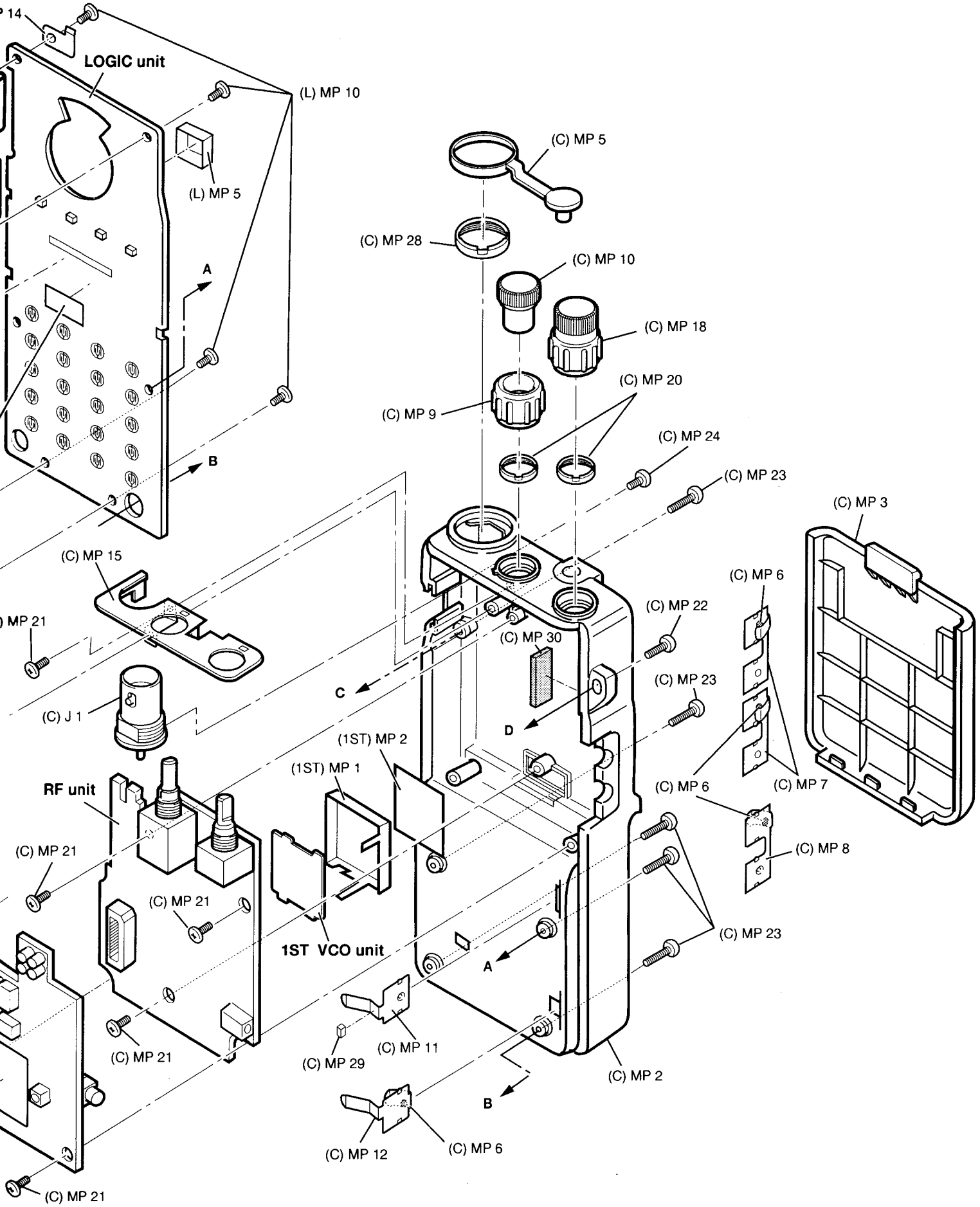
P 14
LOGIC unit
(L) MP 10
(L) MP 5
A
B
(C) MP 5
(C) MP 28
(C) MP 10
(C) MP 18
(C) MP 20
(C) MP 9
(C) MP 24
(C) MP 23
(C) MP 3
(C) MP 15
(C) MP 6
(C) MP 22
) MP 21
(C) MP 30
(C) MP 23
C
(C) J 1
D
(1ST) MP 2
(1ST) MP 1
RF unit
(C) MP 6
(C) MP 7
(C) MP 21
(C) MP 8
(C) MP 21
(C) MP 23
1ST VCO unit
A
(C) MP 21
(C) MP 11
(C) MP 29
(C) MP 2
B
(C) MP 12
(C) MP 6
(C) MP 21

SECTION 8 SEMICONDUCTOR INFORMATION

8-1 TRANSISTORS

NAME	SYMBOL	INSIDE VIEW
2SA1622-6	M6	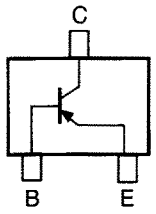
2SB1132 - R	BAR	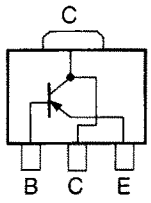
2SB1201 - S	2M	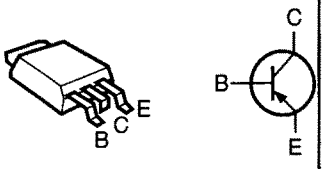
2SC4211-6 2SC4215-O 2SC4226-R25 2SC4228(M)-R45 2SC5065-O 2SD1664-Q	L6 QO R25 R45 MAO DAQ	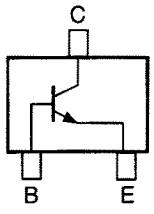
2SK1069-4 2SK880-Y	FJ XY	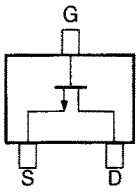
3SK274 3SK291	UN UF	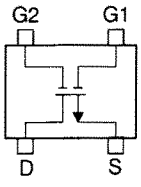
DTA144EU	16	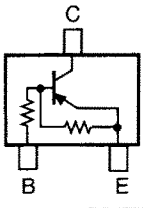

NAME	SYMBOL	INSIDE VIEW
DTC144EU	26	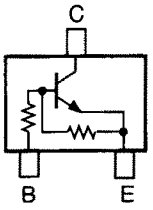
UN9110 UN911F	6L 6O	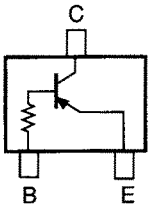
UN9210	8L	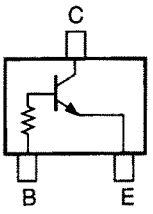
XP1113 XP1114	7L 7Q	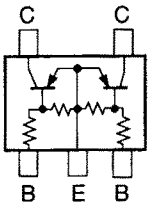
XP1501 - AB	5R	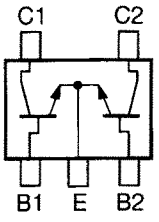

8-2 DIDOES

NAME	SYMBOL	INSIDE VIEW
DA112	AZ	A K
DA113W	AY	A K
DA204U DA221	K K	A K
DAP202U	P	A K1 K2
DAP222	P	K A1 A2
HVU350TRF ISV245 ISV286 ISV288	4 T3 T7 TJ	A K
HSU88TRF MA111 MA728	9 1B 2A	A K

NAME	SYMBOL	INSIDE VIEW
MA6S121	M2D	K3 K2 K1 A3 A2 A1
MA304	7R	pink A K
MA6S121	M2D	K3 K2 K1 A3 A2 A1
MA77	4B	A K
MA8051-M	5-1	A K
MA77	4B	A K
SB07-03C-TB	J	K A

SECTION 9 BOARD LAYOUTS

RF UNIT (TOP VIEW)

The combination of this page and the next page shows the unit layout in the same configuration as the actual P.C. Board.

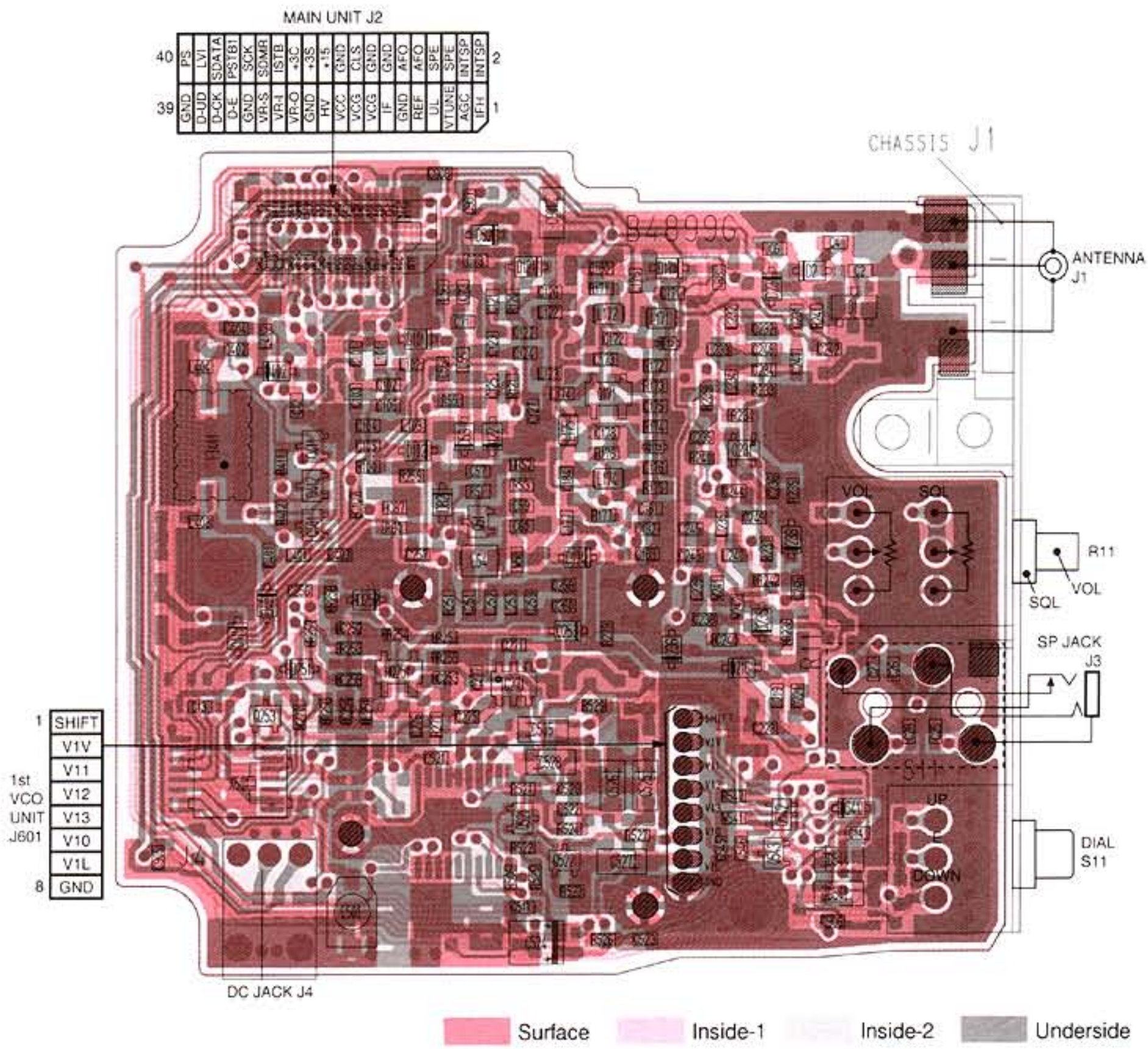

1ST VCO UNIT (TOP VIEW)

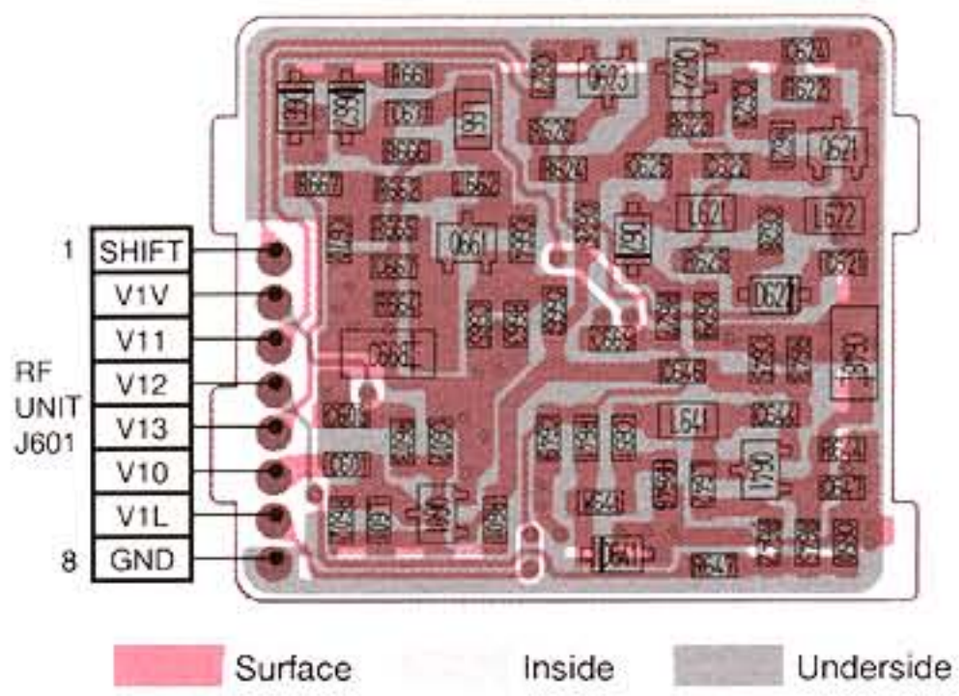

RF UNIT (BOTTOM VIEW)

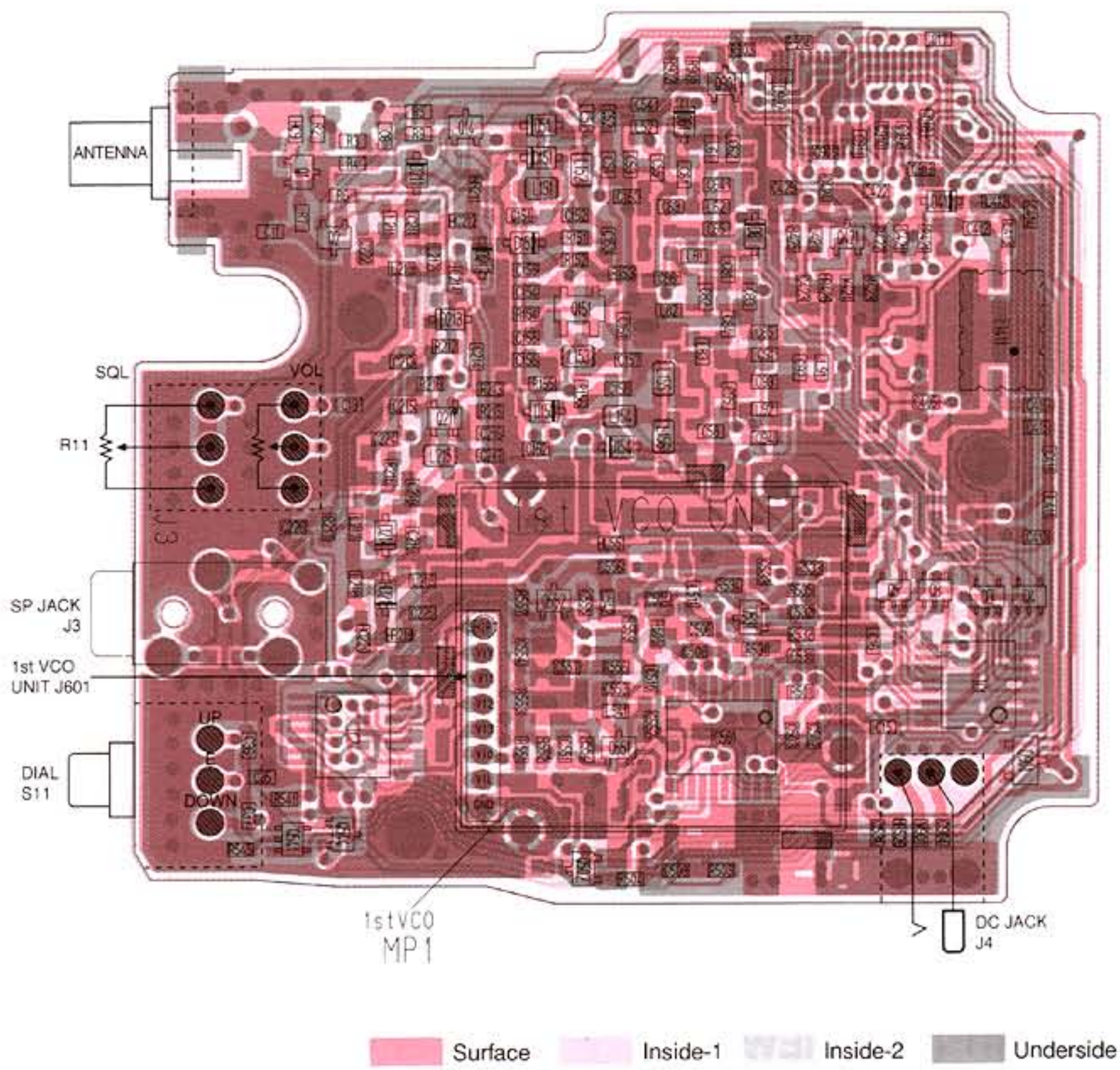

MAIN UNIT (TOP VIEW)

The combination of this page and the next page shows the unit layout in the same configuration as the actual P.C. Board.

2ND VCO UNIT (TOP VIEW)

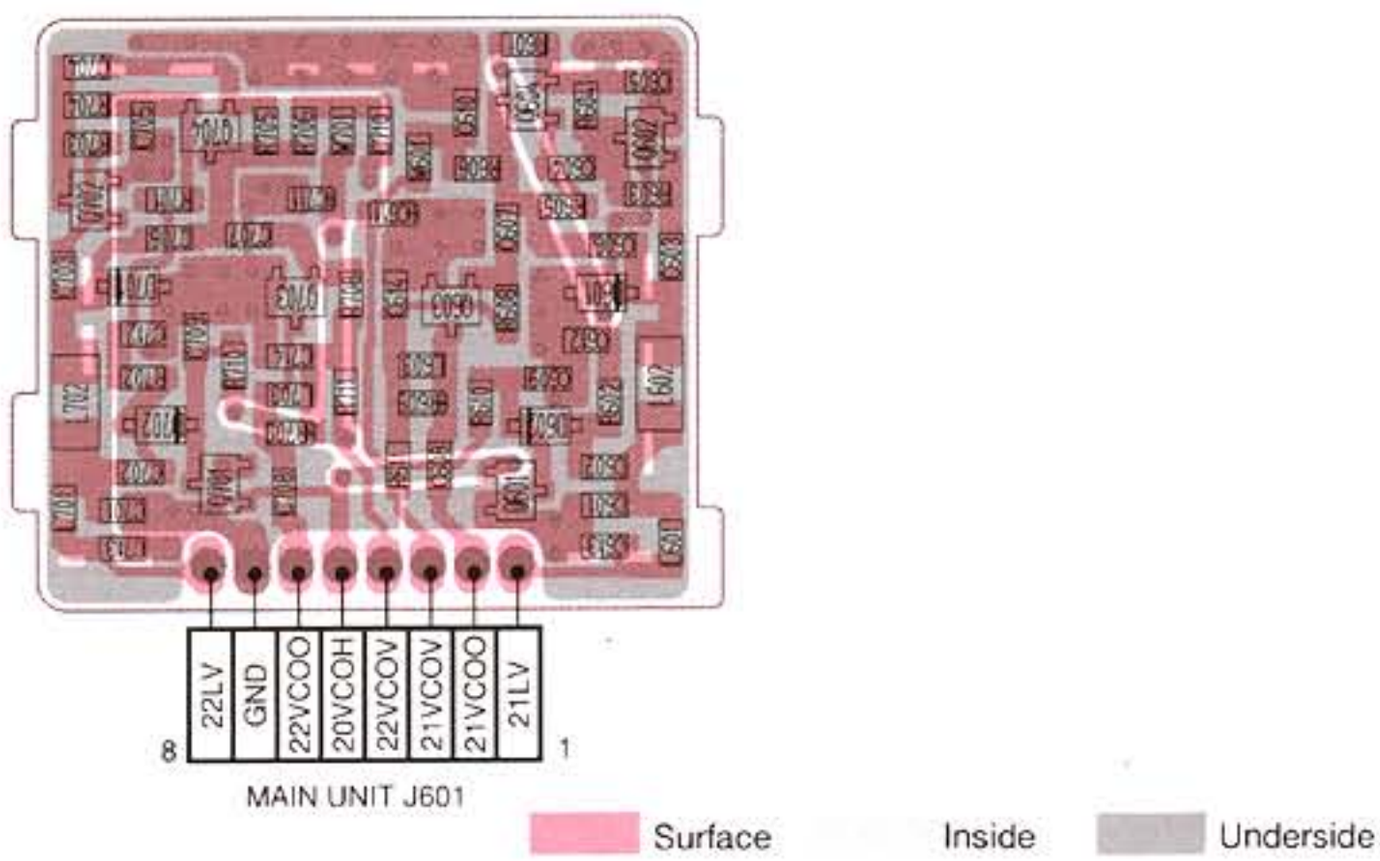

MAIN UNIT (BOTTM VIEW)

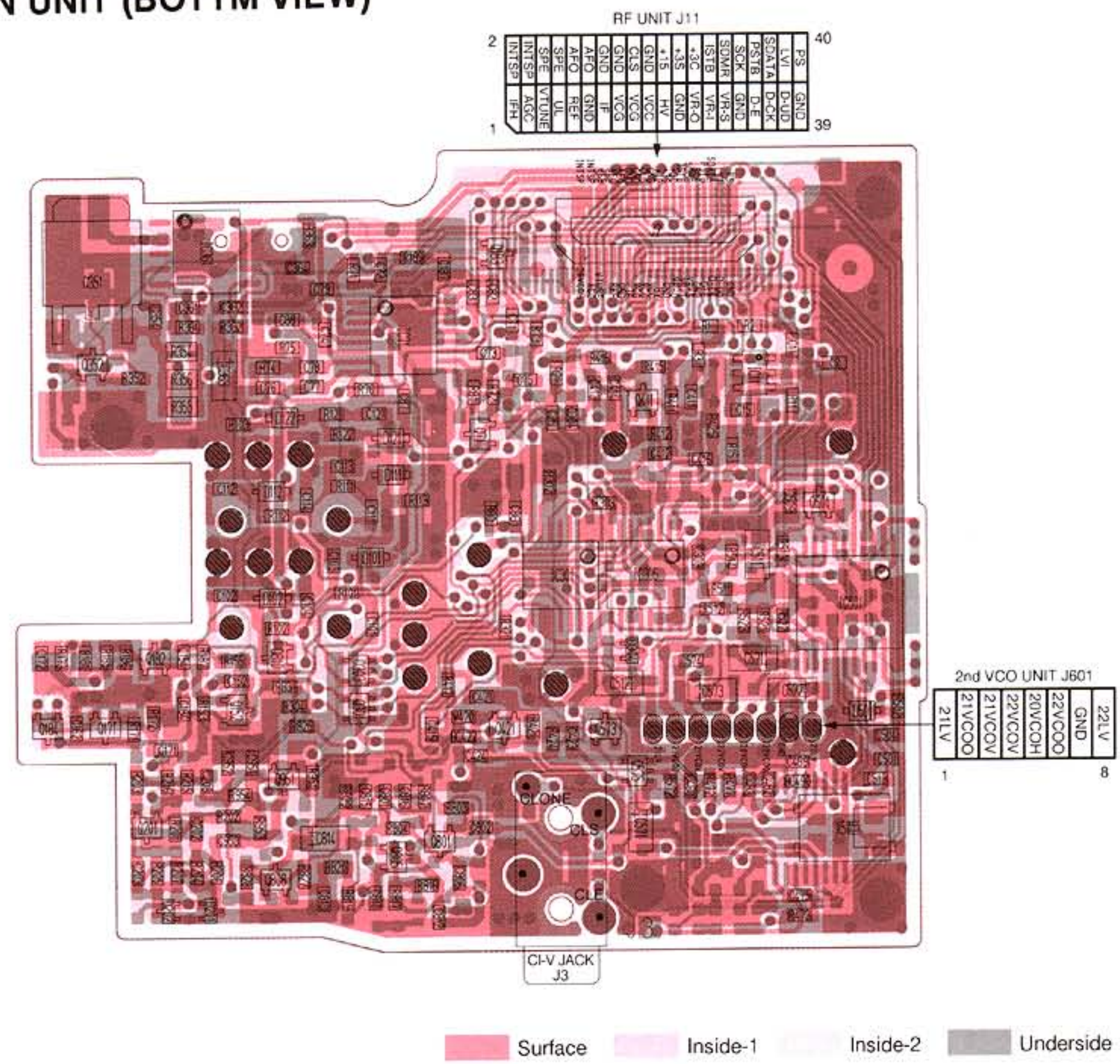

LOGIC UNIT (TOP VIEW)

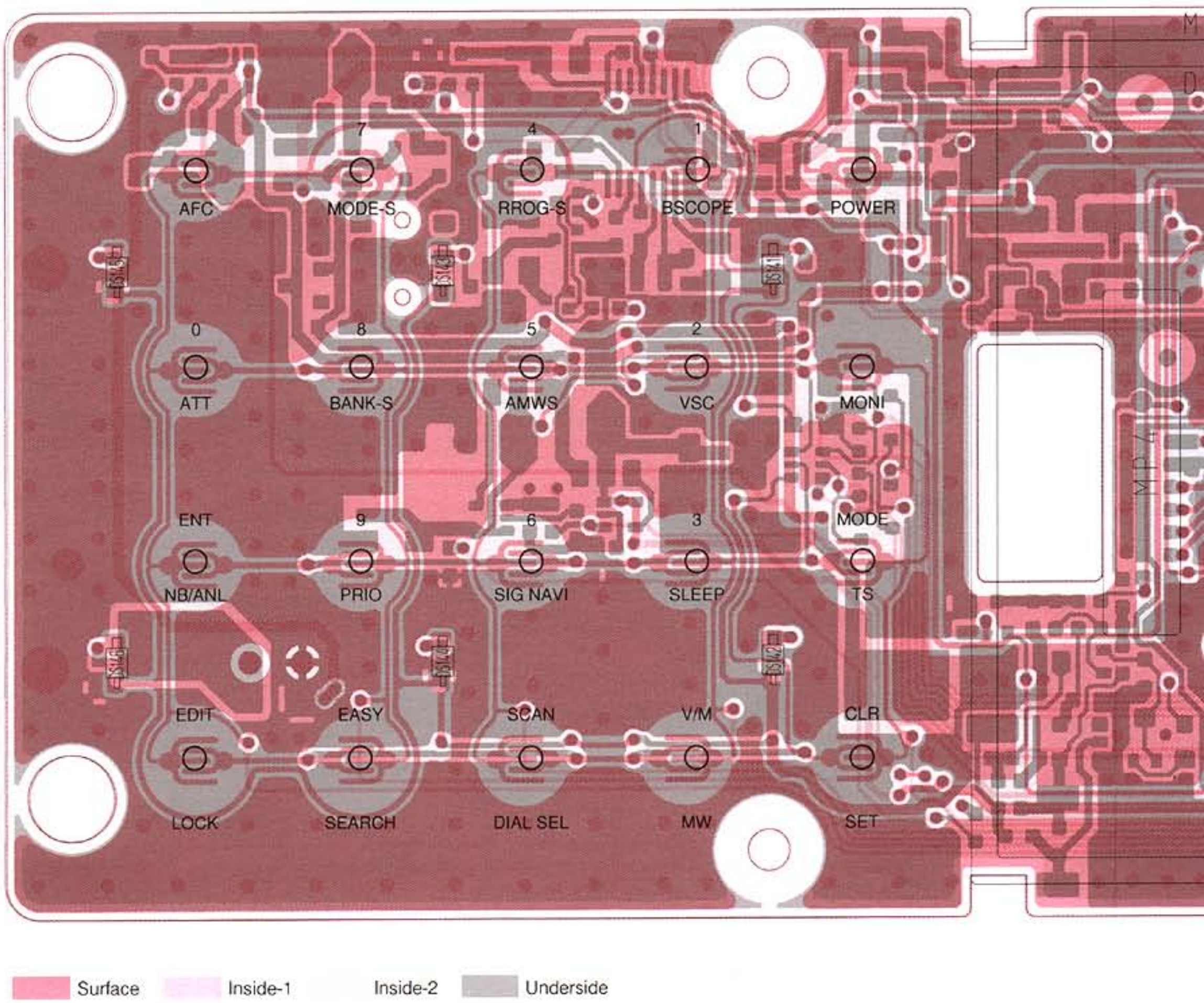

The combination of this page and the next page shows the unit layout in the same configuration as the actual P.C. Board.

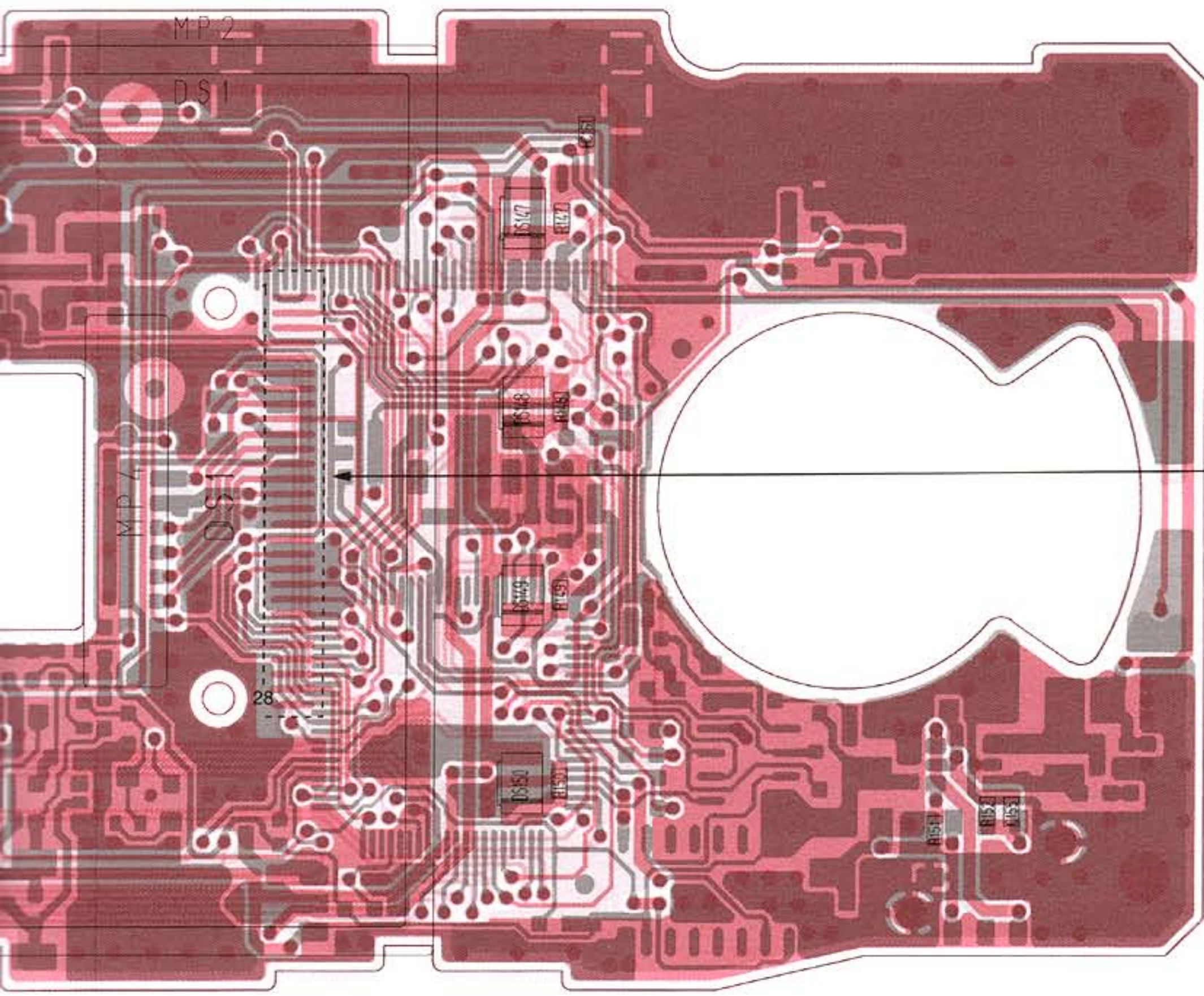

LCD PIN#	
AD	1
WR	2
CS	3
I/O 7	4
I/O 8	5
I/O 5	6
I/O 4	7
I/O 3	8
I/O 2	9
I/O 1	10
I/O 0	11
VDD	12
VSS	13
V5	14
V4	15
V3	16
V2	17
V1	18
V0	19
VR	20
CAL2–	21
CAP1–	22
CAP1+	23
VSS	24
IFVDD	25
L-RES	26
–	27
–	28

LCD
DS1

LOGIC UNIT (BOTTOM VIEW)

MAIN UNIT J1

| | | |

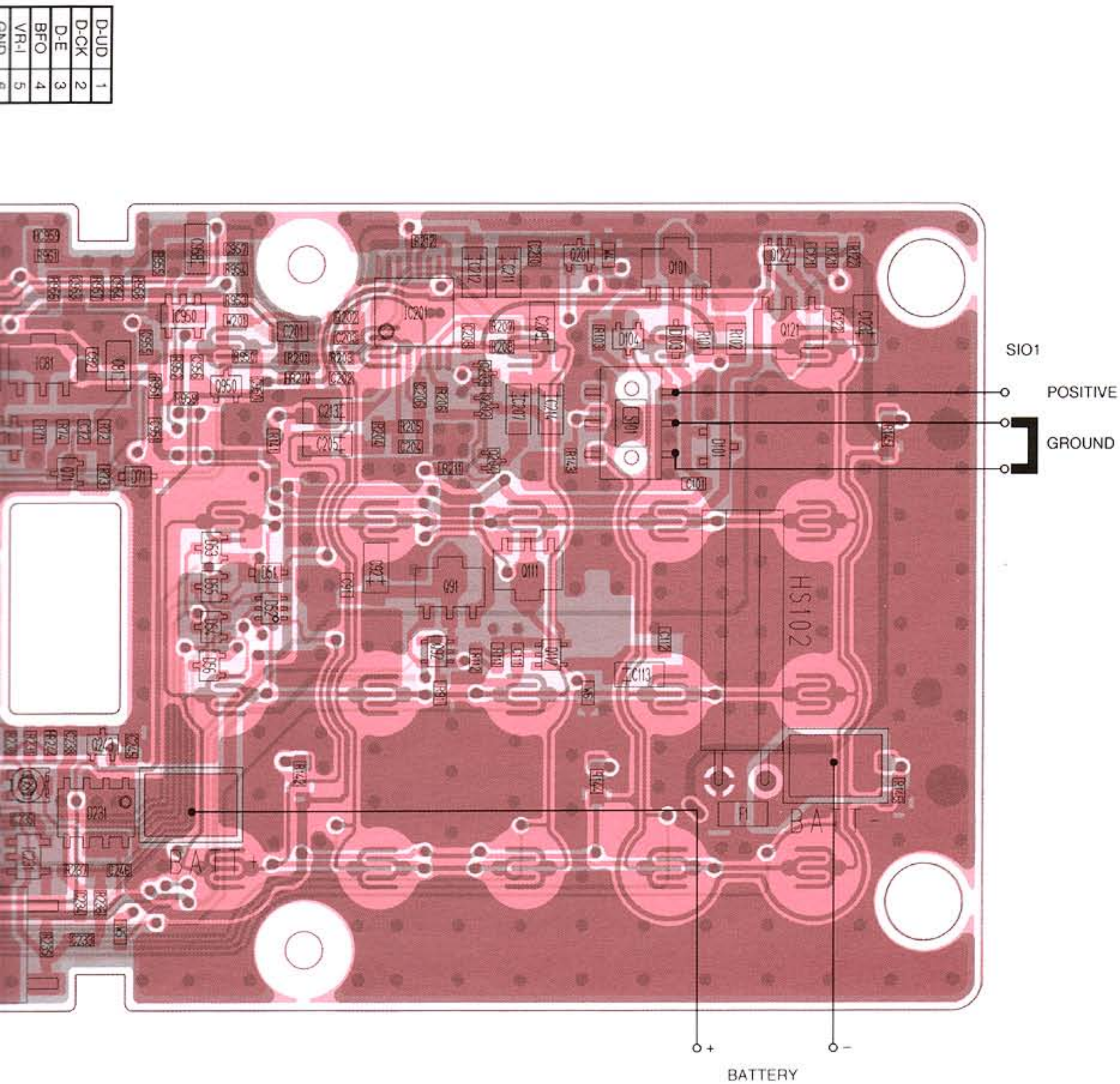
D-UD 1
D-CK 2
D-E 3
BFO 4
VR-I 5
GND 6
SIO1
POSITIVE
GROUND
BATT +
BATT -
+
-
BATTERY

SECTION 10 BLOCK DIAGRAM

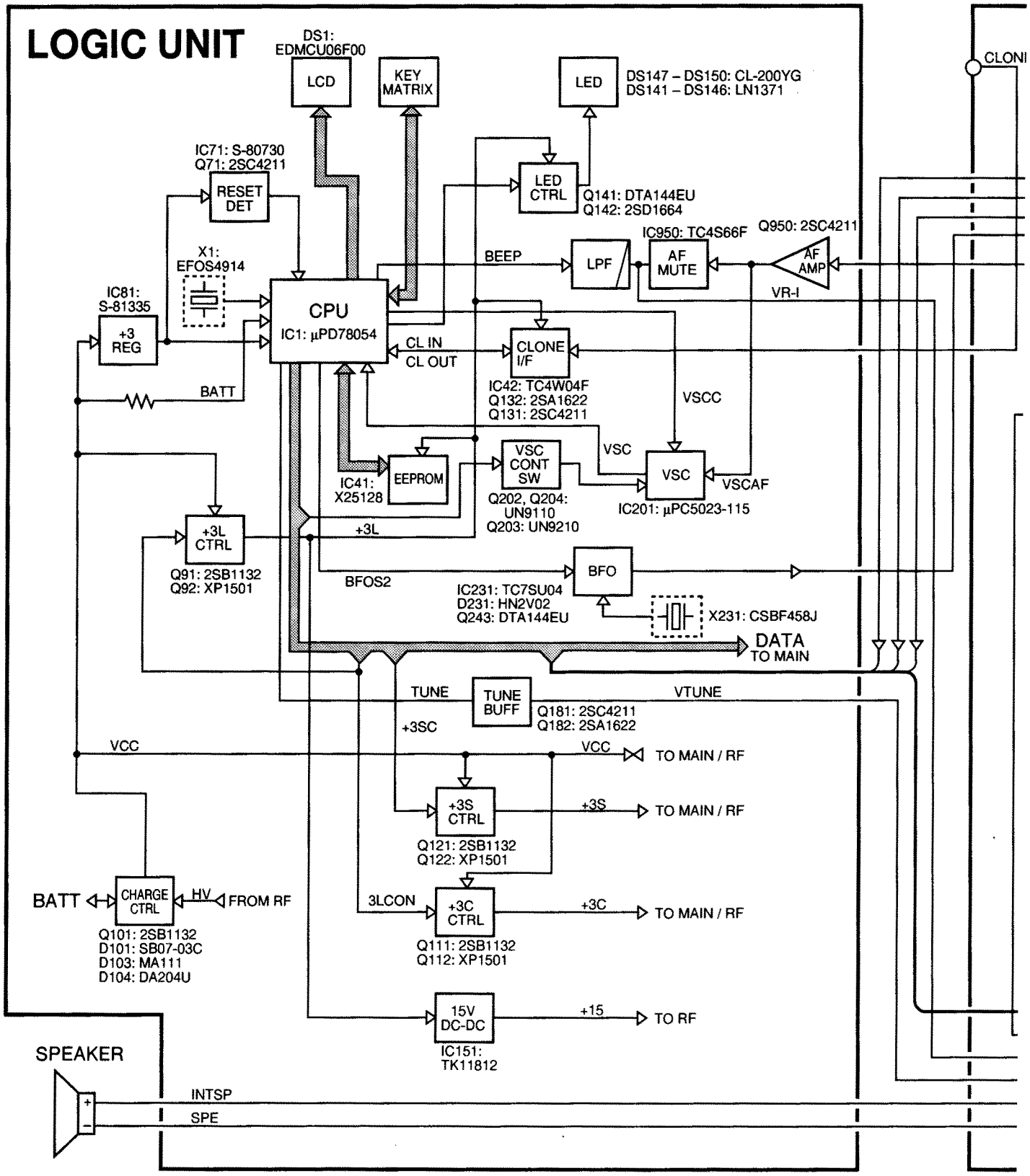

MAIN UNIT

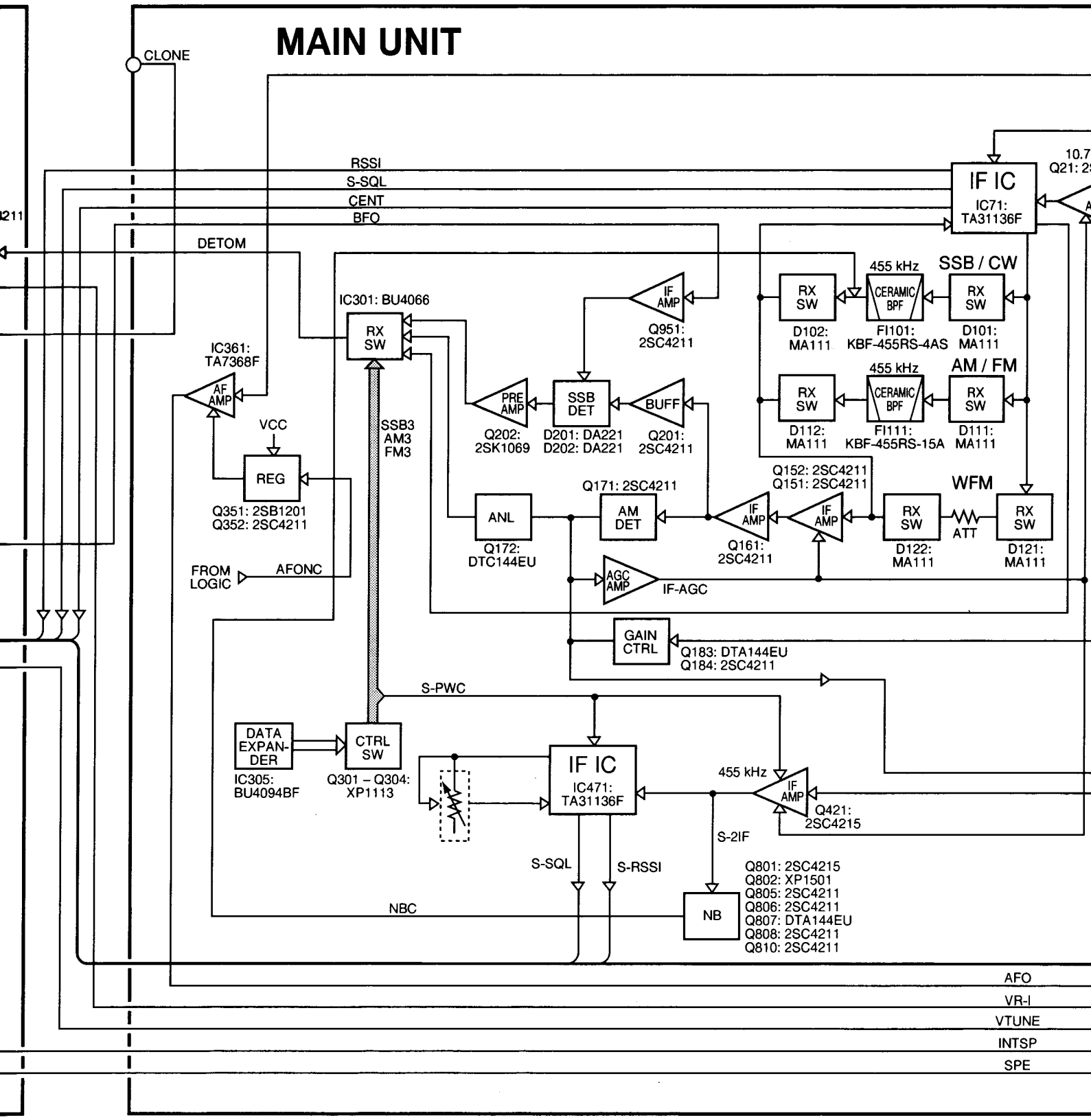
CLONE
RSSI
S-SQL
CENT
BFO
DETOM
IF IC
IC71:
TA31136F
455 kHz
SSB / CW
RX SW
CERAMIC BPF
D102: MA111
FI101: KBF-455RS-4AS
D101: MA111
AM / FM
D112: MA111
FI111: KBF-455RS-15A
D111: MA111
IF AMP
Q951: 2SC4211
IC301: BU4066
IC361: TA7368F
AF AMP
VCC
REG
Q351: 2SB1201
Q352: 2SC4211
SSB3
AM3
FM3
PRE AMP
Q202: 2SK1069
SSB DET
D201: DA221
D202: DA221
BUFF
Q201: 2SC4211
Q152: 2SC4211
Q151: 2SC4211
WFM
Q171: 2SC4211
ANL
Q172: DTC144EU
AM DET
Q161: 2SC4211
D122: MA111
ATT
D121: MA111
FROM LOGIC
AFONC
AGC AMP
IF-AGC
GAIN CTRL
Q183: DTA144EU
Q184: 2SC4211
S-PWC
DATA EXPAN-DER
IC305: BU4094BF
CTRL SW
Q301 – Q304: XP1113
IF IC
IC471:
TA31136F
455 kHz
Q421: 2SC4215
S-2IF
S-SQL
S-RSSI
NBC
NB
Q801: 2SC4215
Q802: XP1501
Q805: 2SC4211
Q806: 2SC4211
Q807: DTA144EU
Q808: 2SC4211
Q810: 2SC4211
AFO
VR-I
VTUNE
INTSP
SPE

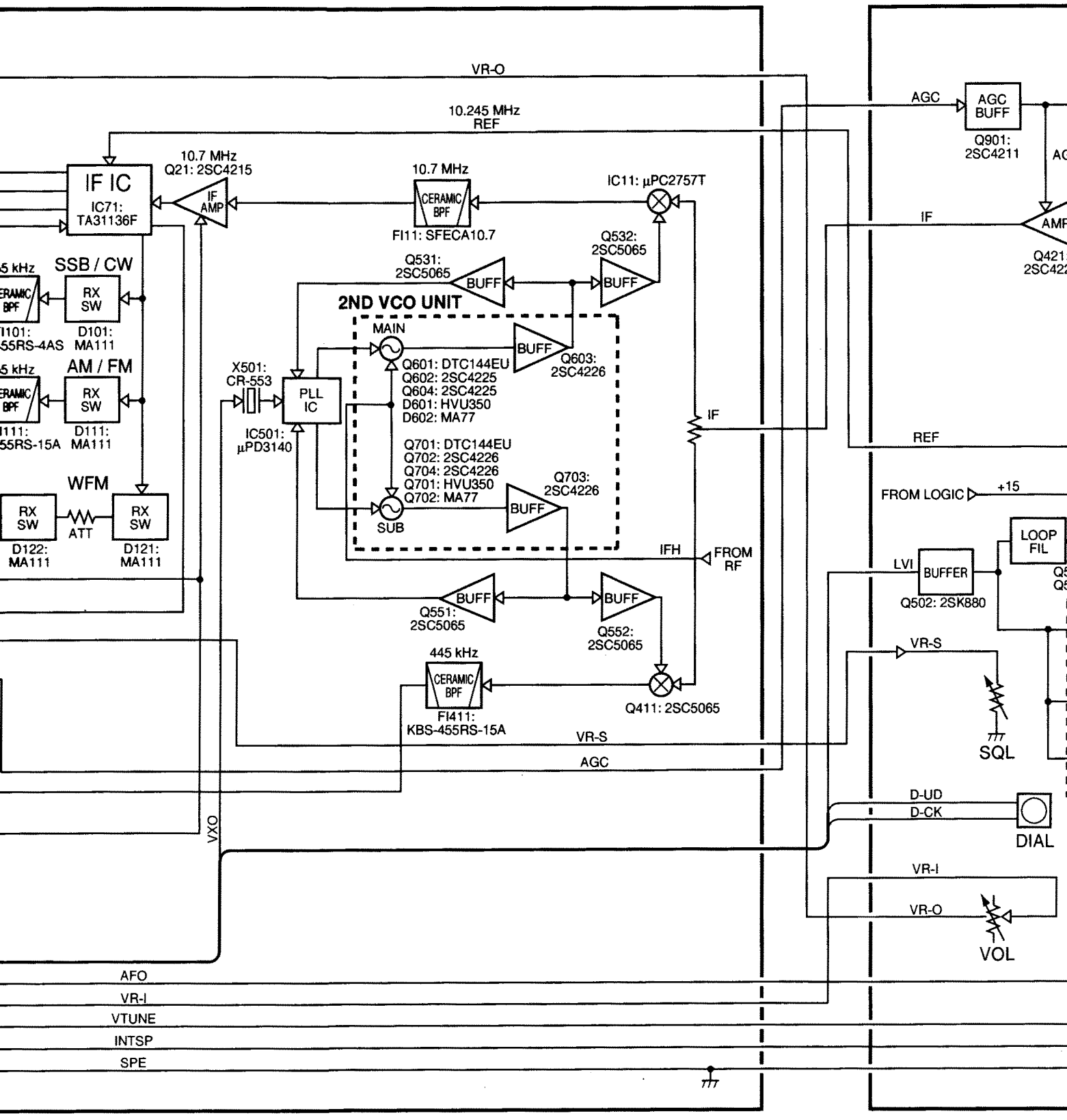
VR-O
10.245 MHz
REF
IF IC
IC71:
TA31136F
10.7 MHz
Q21: 2SC4215
IF
AMP
10.7 MHz
CERAMIC
BPF
FI11: SFECA10.7
IC11: µPC2757T
Q532:
2SC5065
Q531:
2SC5065
BUFF
BUFF
2ND VCO UNIT
MAIN
BUFF
Q603:
2SC4226
Q601: DTC144EU
Q602: 2SC4225
Q604: 2SC4225
D601: HVU350
D602: MA77
X501:
CR-553
PLL
IC
IC501:
µPD3140
IF
Q701: DTC144EU
Q702: 2SC4226
Q704: 2SC4226
Q701: HVU350
Q702: MA77
Q703:
2SC4226
SUB
BUFF
IFH
FROM
RF
BUFF
BUFF
Q551:
2SC5065
Q552:
2SC5065
445 kHz
CERAMIC
BPF
FI411:
KBS-455RS-15A
Q411: 2SC5065
VR-S
AGC
VXO
SSB / CW
RX
SW
D101:
MA111
AM / FM
RX
SW
D111:
MA111
WFM
RX
SW
ATT
RX
SW
D122:
MA111
D121:
MA111
AGC
AGC
BUFF
Q901:
2SC4211
IF
REF
FROM LOGIC
+15
LOOP
FIL
LVI
BUFFER
Q502: 2SK880
VR-S
SQL
D-UD
D-CK
DIAL
VR-I
VR-O
VOL
AFO
VR-I
VTUNE
INTSP
SPE

RF UNIT

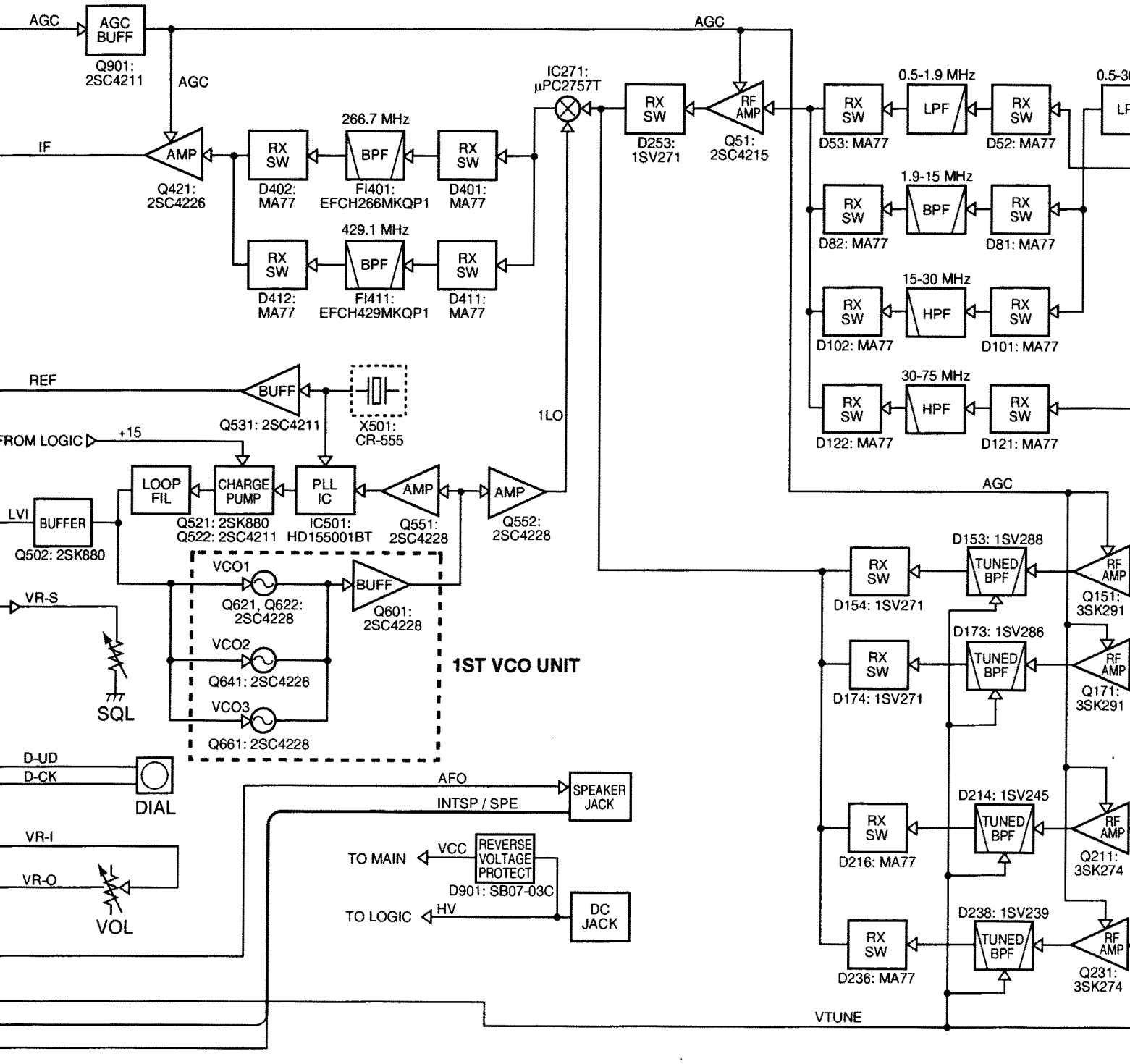
AGC
AGC BUFF
Q901: 2SC4211
AGC
IF
AMP
Q421: 2SC4226
RX SW
D402: MA77
266.7 MHz
BPF
FI401: EFCH266MKQP1
RX SW
D401: MA77
429.1 MHz
RX SW
D412: MA77
BPF
FI411: EFCH429MKQP1
RX SW
D411: MA77
IC271: µPC2757T
RX SW
D253: 1SV271
AGC
RF AMP
Q51: 2SC4215
RX SW
D53: MA77
0.5-1.9 MHz
LPF
RX SW
D52: MA77
RX SW
D82: MA77
1.9-15 MHz
BPF
RX SW
D81: MA77
RX SW
D102: MA77
15-30 MHz
HPF
RX SW
D101: MA77
RX SW
D122: MA77
30-75 MHz
HPF
RX SW
D121: MA77
REF
BUFF
Q531: 2SC4211
X501: CR-555
1LO
FROM LOGIC
+15
LOOP FIL
CHARGE PUMP
PLL IC
AMP
AMP
LVI
BUFFER
Q502: 2SK880
Q521: 2SK880
Q522: 2SC4211
IC501: HD155001BT
Q551: 2SC4228
Q552: 2SC4228
VCO1
Q621, Q622: 2SC4228
BUFF
Q601: 2SC4228
VR-S
VCO2
Q641: 2SC4226
1ST VCO UNIT
SQL
VCO3
Q661: 2SC4228
D-UD
D-CK
DIAL
AFO
SPEAKER JACK
INTSP / SPE
VR-I
VR-O
VOL
TO MAIN
VCC
REVERSE VOLTAGE PROTECT
D901: SB07-03C
TO LOGIC
HV
DC JACK
AGC
RX SW
D154: 1SV271
D153: 1SV288
TUNED BPF
RF AMP
Q151: 3SK291
RX SW
D174: 1SV271
D173: 1SV286
TUNED BPF
RF AMP
Q171: 3SK291
RX SW
D216: MA77
D214: 1SV245
TUNED BPF
RF AMP
Q211: 3SK274
RX SW
D236: MA77
D238: 1SV239
TUNED BPF
RF AMP
Q231: 3SK274
VTUNE

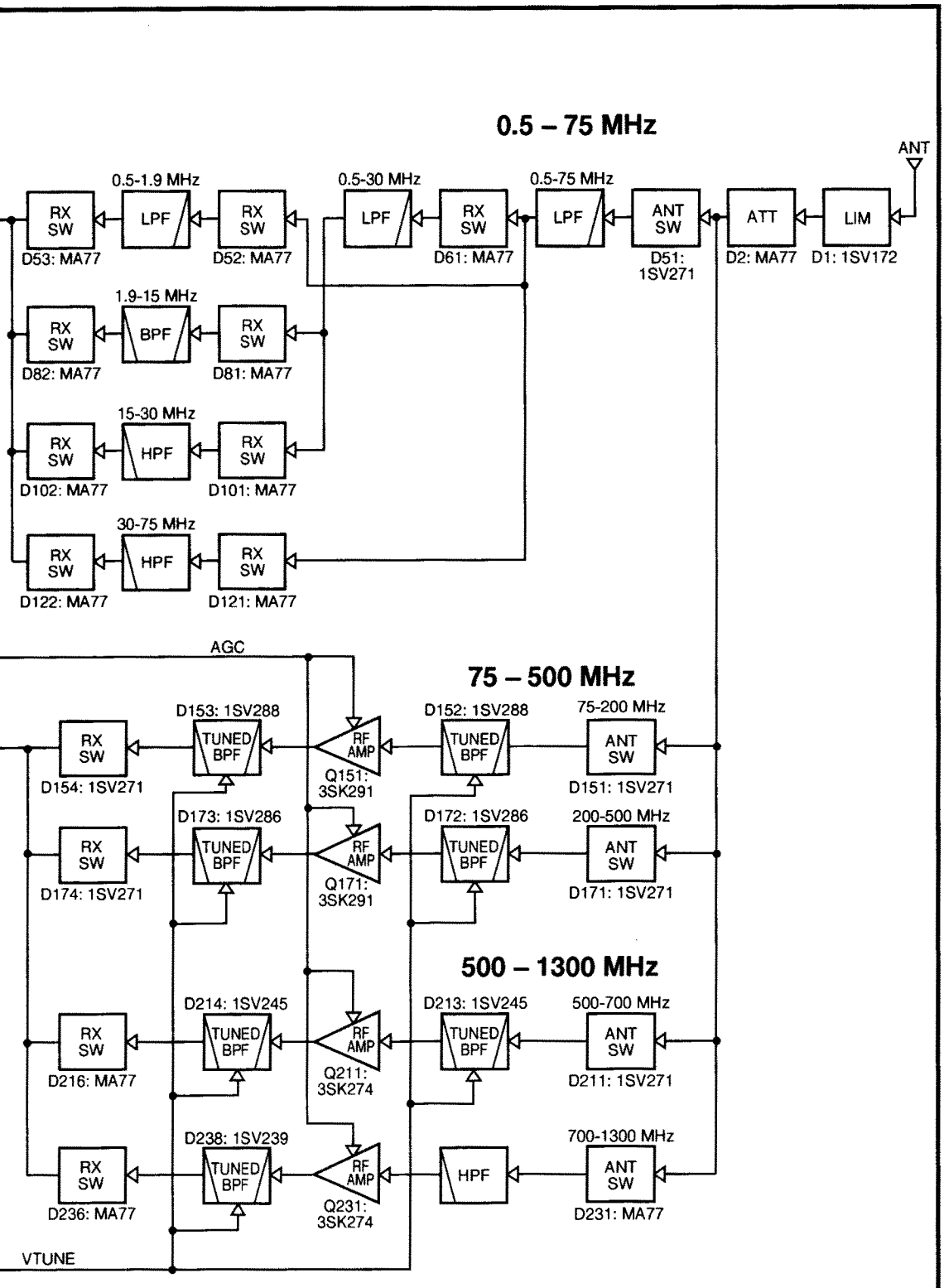
0.5 – 75 MHz
ANT
0.5-1.9 MHz
0.5-30 MHz
0.5-75 MHz
RX SW
LPF
RX SW
LPF
RX SW
LPF
ANT SW
ATT
LIM
D53: MA77
D52: MA77
D61: MA77
D51: 1SV271
D2: MA77
D1: 1SV172
1.9-15 MHz
RX SW
BPF
RX SW
D82: MA77
D81: MA77
15-30 MHz
RX SW
HPF
RX SW
D102: MA77
D101: MA77
30-75 MHz
RX SW
HPF
RX SW
D122: MA77
D121: MA77
AGC
75 – 500 MHz
D153: 1SV288
D152: 1SV288
75-200 MHz
RX SW
TUNED BPF
RF AMP
TUNED BPF
ANT SW
D154: 1SV271
Q151: 3SK291
D151: 1SV271
D173: 1SV286
D172: 1SV286
200-500 MHz
RX SW
TUNED BPF
RF AMP
TUNED BPF
ANT SW
D174: 1SV271
Q171: 3SK291
D171: 1SV271
500 – 1300 MHz
D214: 1SV245
D213: 1SV245
500-700 MHz
RX SW
TUNED BPF
RF AMP
TUNED BPF
ANT SW
D216: MA77
Q211: 3SK274
D211: 1SV271
D238: 1SV239
700-1300 MHz
RX SW
TUNED BPF
RF AMP
HPF
ANT SW
D236: MA77
Q231: 3SK274
D231: MA77
VTUNE

SECTION 11 VOLTAGE DIAGRAM

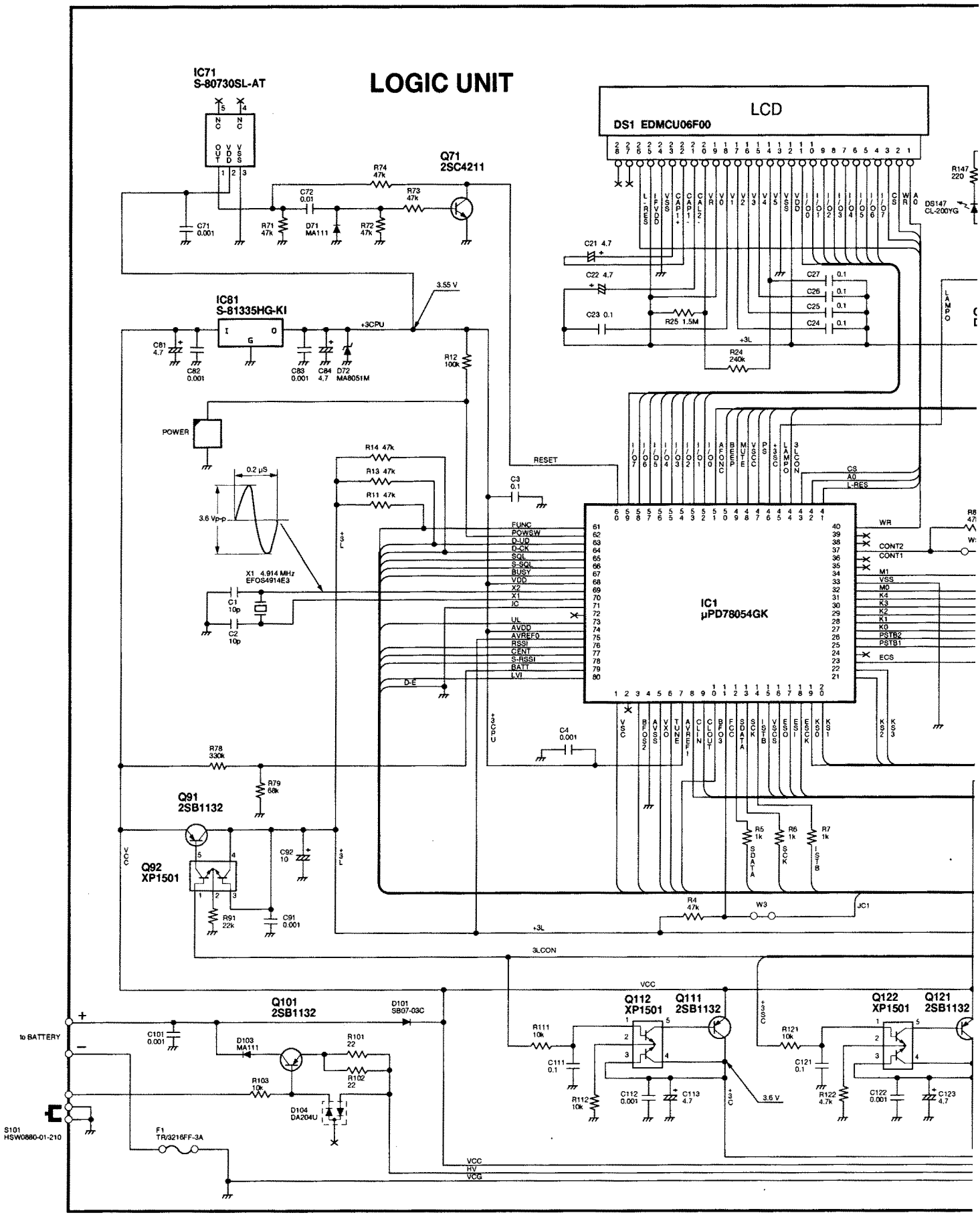

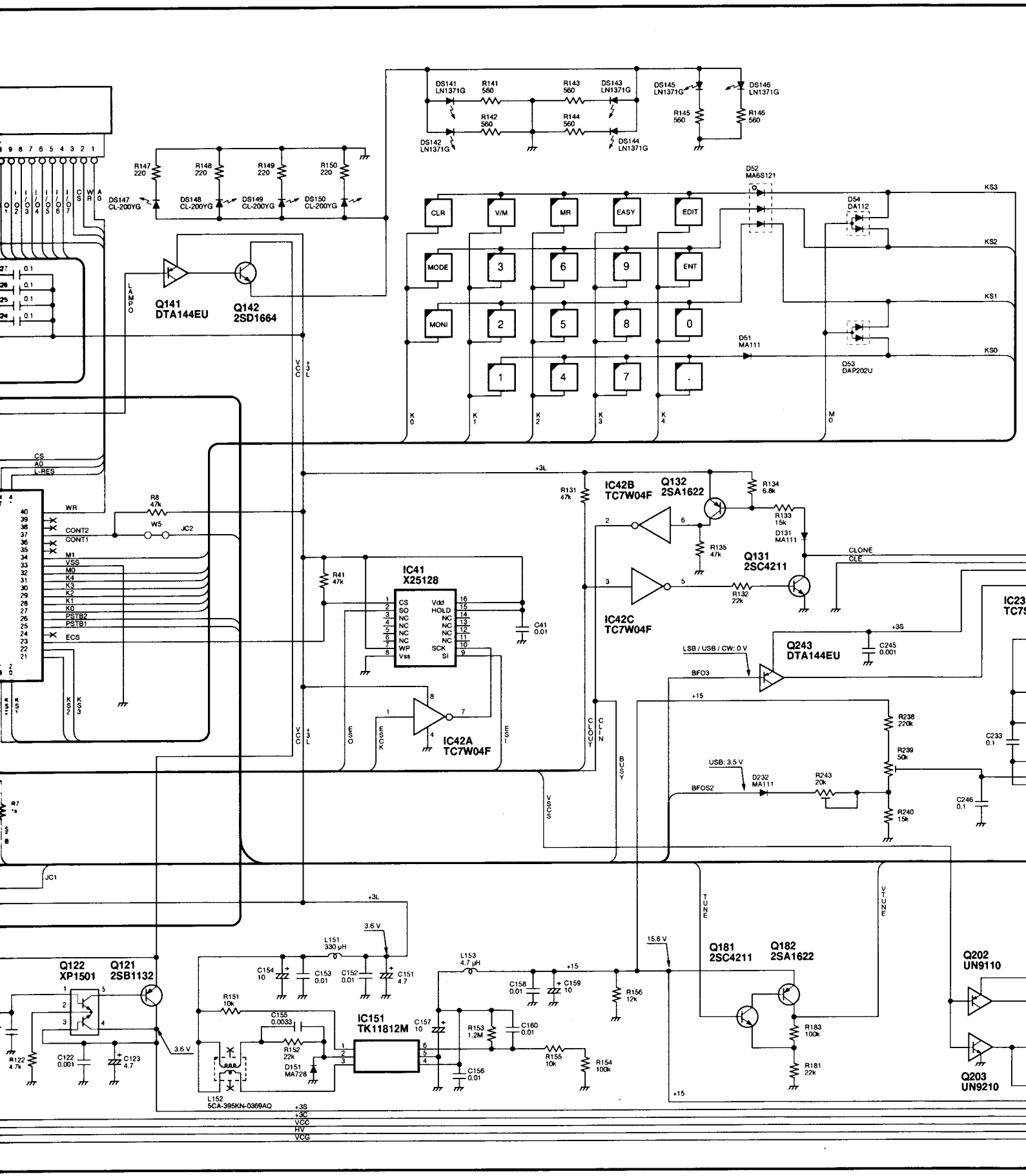
DS141 LN1371G
R141 560
R143 560
DS143 LN1371G
DS145 LN1371G
DS146 LN1371G
R142 560
R144 560
R145 560
R146 560
DS142 LN1371G
DS144 LN1371G
R147 220
R148 220
R149 220
R150 220
DS147 CL-200YG
DS148 CL-200YG
DS149 CL-200YG
DS150 CL-200YG
D52 MA6S121
D54 DA112
KS3
KS2
KS1
KS0
CLR
V/M
MR
EASY
EDIT
MODE
3
6
9
ENT
MONI
2
5
8
0
1
4
7
.
D51 MA111
D53 DAP202U
K0
K1
K2
K3
K4
M0
Q141 DTA144EU
Q142 2SD1664
LAMPO
VCC +3L
CS
A0
L-RES
WR
R8 47k
W5
JC2
CONT2
CONT1
M1
VSS
M0
K4
K3
K2
K1
K0
PSTB2
PSTB1
ECS
+3L
R131 47k
IC42B TC7W04F
Q132 2SA1622
R134 6.8k
R133 15k
D131 MA111
R135 47k
Q131 2SC4211
CLONE
CLE
R132 22k
IC42C TC7W04F
R41 47k
IC41 X25128
CS
SO
NC
WP
Vss
Vdd
HOLD
SCK
SI
C41 0.01
IC42A TC7W04F
+3S
C245 0.001
Q243 DTA144EU
LSB / USB / CW: 0 V
BFO3
+15
R238 220k
R239 50k
R240 15k
C233 0.1
C246 0.1
USB: 3.5 V
D232 MA111
R243 20k
BFOS2
CLOUT
CLIN
BUSY
VSCS
JC1
+3L
3.6 V
L151 330 μH
C154 10
C153 0.01
C152 0.01
C151 4.7
L153 4.7 μH
C158 0.01
C159 10
R156 12k
15.6 V
Q181 2SC4211
Q182 2SA1622
TUNE
VTUNE
Q202 UN9110
Q203 UN9210
Q122 XP1501
Q121 2SB1132
R122 4.7k
C122 0.001
C123 4.7
R151 10k
C155 0.0033
R152 22k
D151 MA728
IC151 TK11812M
C157 10
R153 1.2M
C160 0.01
R155 10k
R154 100k
C156 0.01
R183 100k
R181 22k
L152 5CA-395KN-0369AQ
+3S
+3C
VCC
HV
VCG

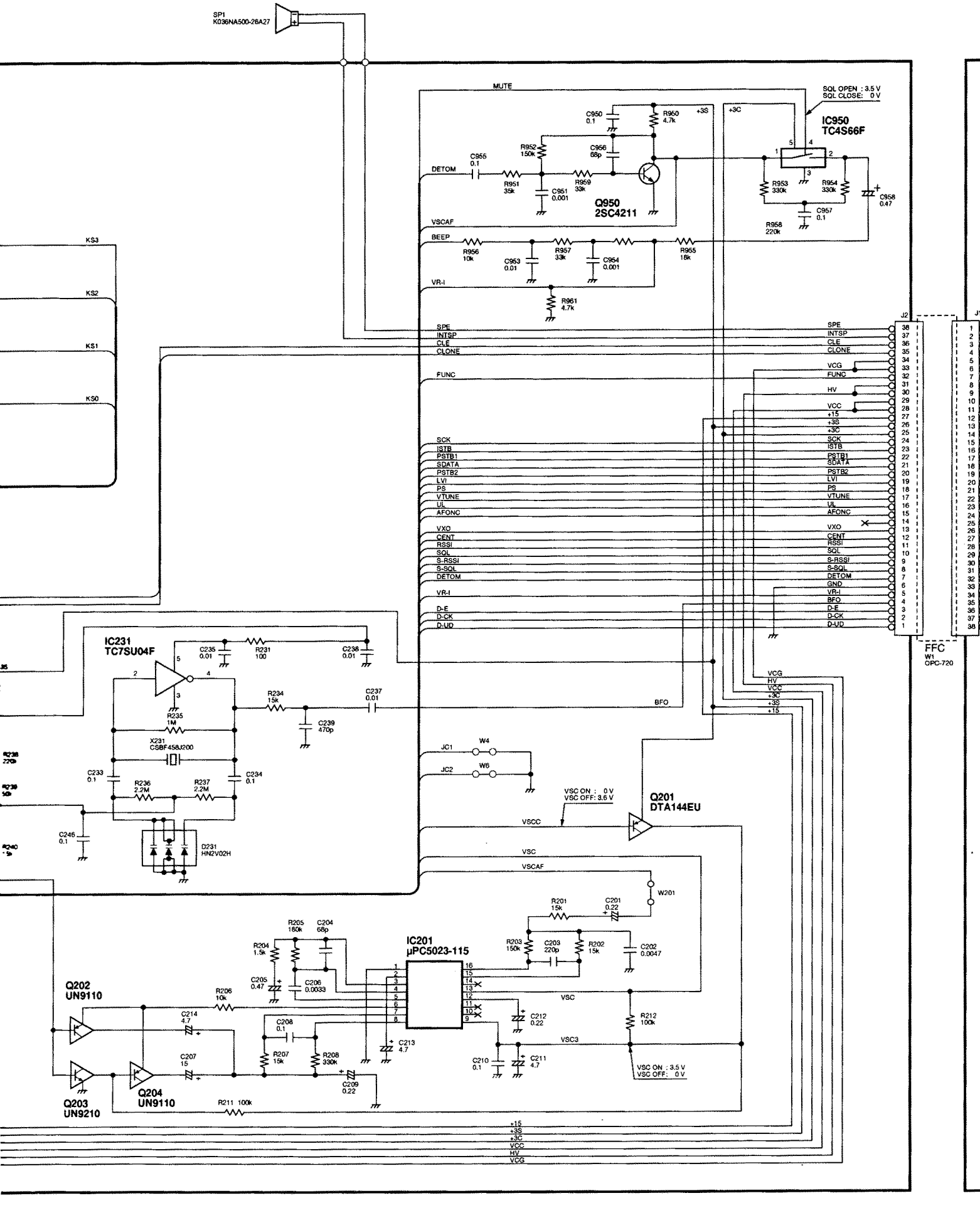
SP1
K036NA500-26A27
MUTE
SQL OPEN : 3.5 V
SQL CLOSE: 0 V
IC950
TC4S66F
Q950
2SC4211
DETOM
VSCAF
BEEP
VR-I
KS3
KS2
KS1
KS0
SPE
INTSP
CLE
CLONE
FUNC
SCK
ISTB
PSTB1
SDATA
PSTB2
LVI
PS
VTUNE
UL
AFONC
VXO
CENT
RSSI
SQL
S-RSSI
S-SQL
DETOM
VR-I
D-E
D-CK
D-UD
VCG
HV
VCC
+15
+3S
+3C
GND
BFO
J2
J1
FFC
W1
OPC-720
IC231
TC7SU04F
X231
CSBF458J200
D231
HN2V02H
JC1
JC2
W4
W6
VSC ON : 0 V
VSC OFF: 3.6 V
Q201
DTA144EU
VSCC
VSC
W201
IC201
μPC5023-115
Q202
UN9110
Q203
UN9210
Q204
UN9110
VSC3
VSC ON : 3.5 V
VSC OFF: 0 V

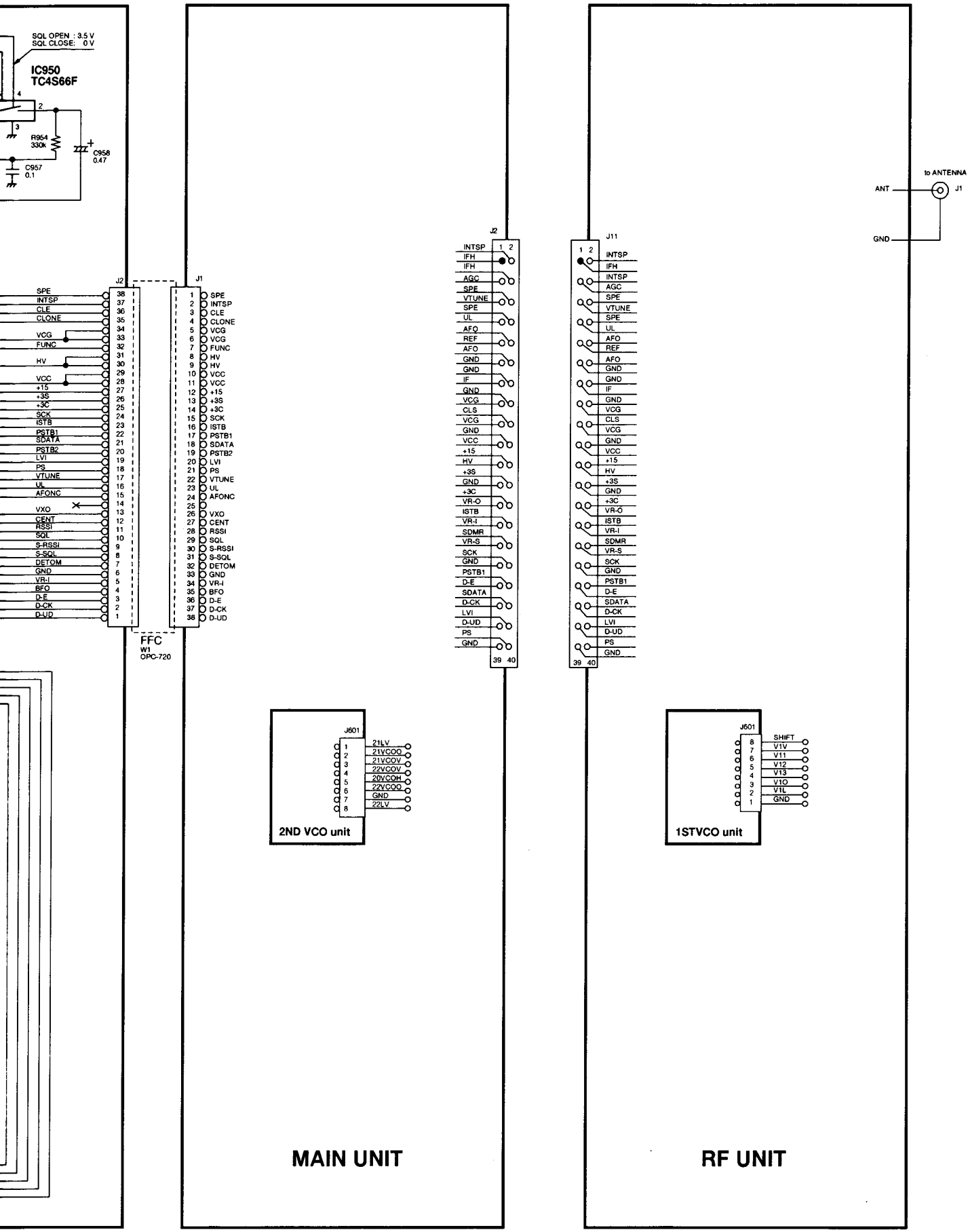
SQL OPEN : 3.5 V
SQL CLOSE: 0 V
IC950
TC4S66F
R954
330k
C958
0.47
C957
0.1
J2
J1
SPE
INTSP
CLE
CLONE
VCG
FUNC
HV
VCC
+15
+3S
+3C
SCK
ISTB
PSTB1
SDATA
PSTB2
LVI
PS
VTUNE
UL
AFONC
VXO
CENT
RSSI
SQL
S-RSSI
S-SQL
DETOM
GND
VR-I
BFO
D-E
D-CK
D-UD
FFC
W1
OPC-720
J601
21LV
21VCOQ
21VCOV
22VCOV
20VCOH
22VCOQ
GND
22LV
2ND VCO unit
MAIN UNIT
J11
INTSP
IFH
AGC
SPE
VTUNE
UL
AFO
REF
GND
IF
VCG
CLS
VCC
+15
HV
+3S
+3C
VR-O
ISTB
VR-I
SDMR
VR-S
SCK
PSTB1
D-E
SDATA
D-CK
LVI
D-UD
PS
to ANTENNA
ANT
J1
GND
J601
SHIFT
V1V
V11
V12
V13
V1O
V1L
GND
1STVCO unit
RF UNIT

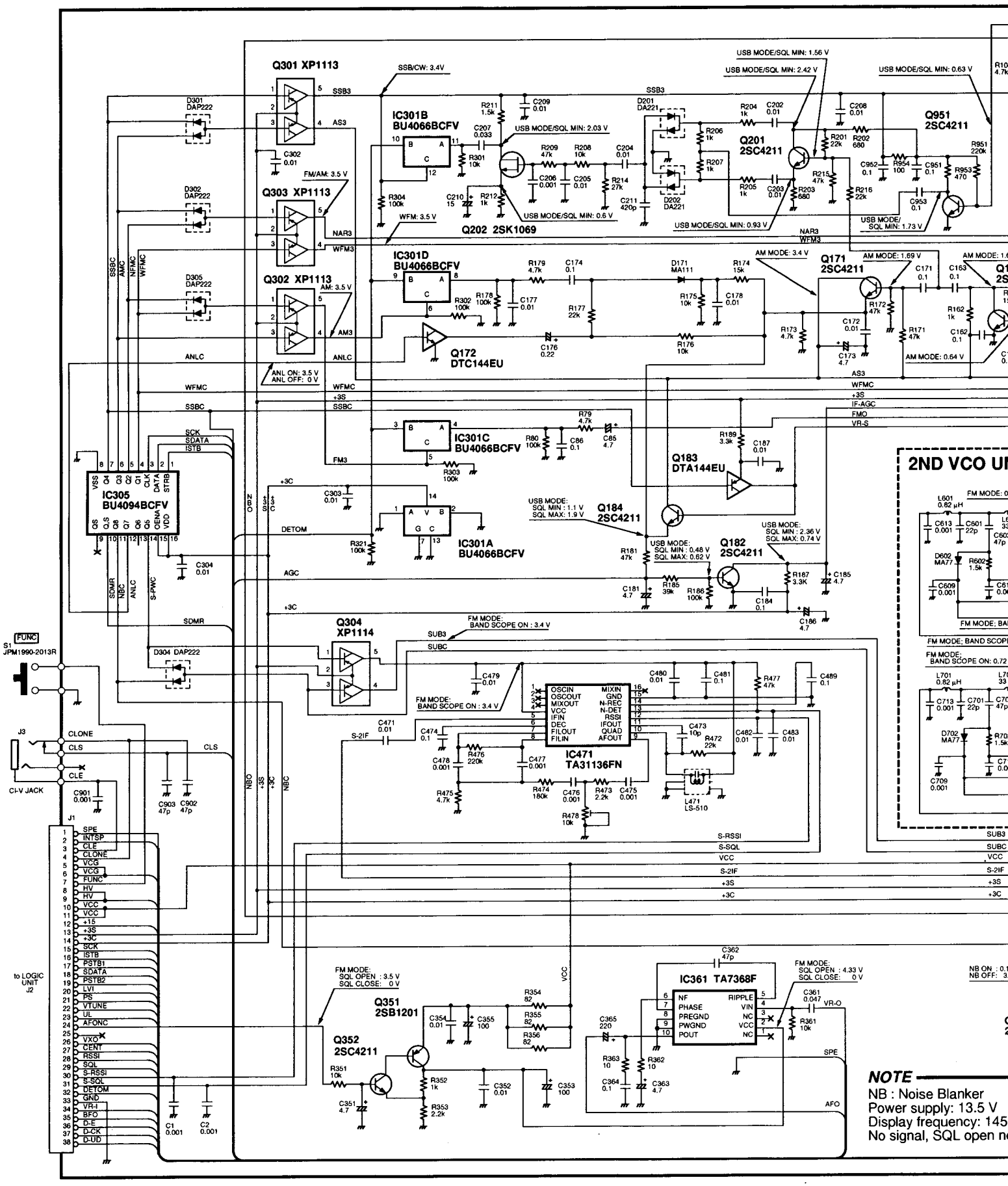
Q301 XP1113
Q303 XP1113
Q302 XP1113
Q304 XP1114
IC301B BU4066BCFV
IC301D BU4066BCFV
IC301C BU4066BCFV
IC301A BU4066BCFV
IC305 BU4094BCFV
IC471 TA31136FN
IC361 TA7368F
Q201 2SC4211
Q202 2SK1069
Q951 2SC4211
Q171 2SC4211
Q172 DTC144EU
Q183 DTA144EU
Q184 2SC4211
Q182 2SC4211
Q351 2SB1201
Q352 2SC4211
2ND VCO UN
FUNC
S1 JPM1990-2013R
J3
CI-V JACK
J1
to LOGIC UNIT J2
NOTE
NB : Noise Blanker
Power supply: 13.5 V
Display frequency: 145
No signal, SQL open n

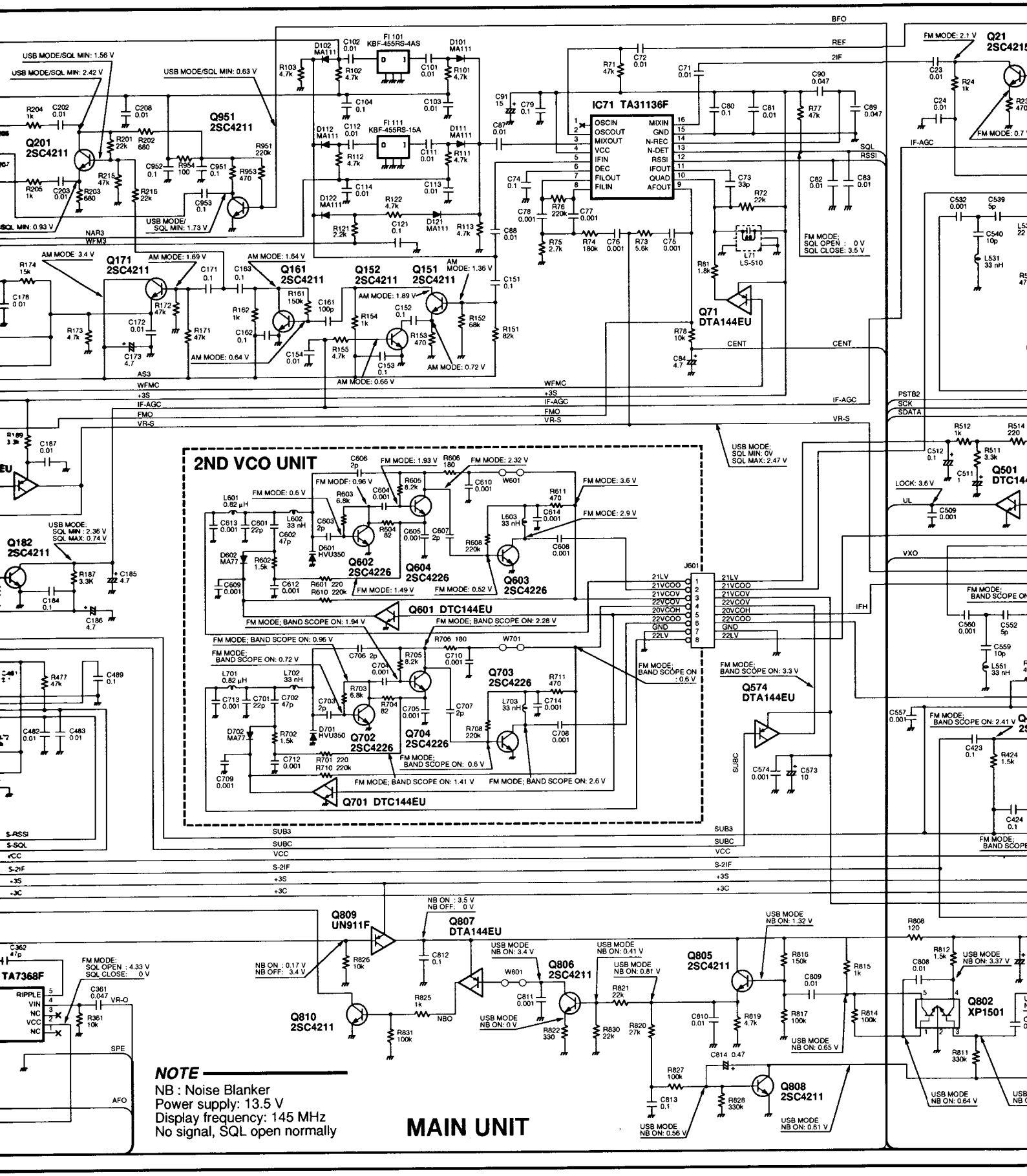
2ND VCO UNIT
IC71 TA31136F
OSCIN
OSCOUT
MIXOUT
VCC
IFIN
DEC
FILOUT
FILIN
MIXIN
GND
N-REC
N-DET
RSSI
IFOUT
QUAD
AFOUT
Q951 2SC4211
Q201 2SC4211
Q171 2SC4211
Q161 2SC4211
Q152 2SC4211
Q151 2SC4211
Q71 DTA144EU
Q21 2SC4215
Q501 DTC144
Q182 2SC4211
Q601 DTC144EU
Q602 2SC4226
Q603 2SC4226
Q604 2SC4226
Q702 2SC4226
Q703 2SC4226
Q704 2SC4226
Q701 DTC144EU
Q574 DTA144EU
Q809 UN911F
Q807 DTA144EU
Q806 2SC4211
Q805 2SC4211
Q810 2SC4211
Q808 2SC4211
Q802 XP1501
TA7368F
FI 101 KBF-455RS-4AS
FI 111 KBF-455RS-15A
L71 LS-510
J601
BFO
REF
2IF
SQL
RSSI
IF-AGC
CENT
WFMC
+3S
FMO
VR-S
PSTB2
SCK
SDATA
VXO
IFH
SUB3
SUBC
VCC
S-2IF
+3C
S-RSSI
S-SQL
NAR3
WFM3
AS3
SPE
AFO
VR-O
NBO
USB MODE/SQL MIN: 1.56 V
USB MODE/SQL MIN: 2.42 V
USB MODE/SQL MIN: 0.63 V
USB MODE/ SQL MIN: 1.73 V
SQL MIN: 0.93 V
AM MODE: 3.4 V
AM MODE: 1.69 V
AM MODE: 1.64 V
AM MODE: 1.36 V
AM MODE: 1.89 V
AM MODE: 0.64 V
AM MODE: 0.66 V
AM MODE: 0.72 V
FM MODE: 2.1 V
FM MODE: 0.7
FM MODE: SQL OPEN : 0 V SQL CLOSE: 3.5 V
USB MODE: SQL MIN: 0V SQL MAX: 2.47 V
USB MODE: SQL MIN : 2.36 V SQL MAX: 0.74 V
FM MODE: SQL OPEN : 4.33 V SQL CLOSE: 0 V
LOCK: 3.6 V
UL
FM MODE: 0.6 V
FM MODE: 0.96 V
FM MODE: 1.93 V
FM MODE: 2.32 V
FM MODE: 3.6 V
FM MODE: 2.9 V
FM MODE: 1.49 V
FM MODE: 0.52 V
FM MODE; BAND SCOPE ON: 1.94 V
FM MODE; BAND SCOPE ON: 2.28 V
FM MODE; BAND SCOPE ON: 0.96 V
FM MODE: BAND SCOPE ON: 0.72 V
FM MODE: BAND SCOPE ON : 0.6 V
FM MODE: BAND SCOPE ON: 3.3 V
FM MODE; BAND SCOPE ON: 0.6 V
FM MODE; BAND SCOPE ON: 1.41 V
FM MODE; BAND SCOPE ON: 2.6 V
FM MODE: BAND SCOPE ON: 2.41 V
NB ON : 3.5 V NB OFF: 0 V
NB ON : 0.17 V NB OFF: 3.4 V
USB MODE NB ON: 3.4 V
USB MODE NB ON: 0.41 V
USB MODE NB ON: 0.81 V
USB MODE NB ON: 0 V
USB MODE NB ON: 1.32 V
USB MODE NB ON: 0.65 V
USB MODE NB ON: 3.37 V
USB MODE NB ON: 0.64 V
USB MODE NB ON: 0.56 V
USB MODE NB ON: 0.61 V
NOTE
NB : Noise Blanker
Power supply: 13.5 V
Display frequency: 145 MHz
No signal, SQL open normally
MAIN UNIT

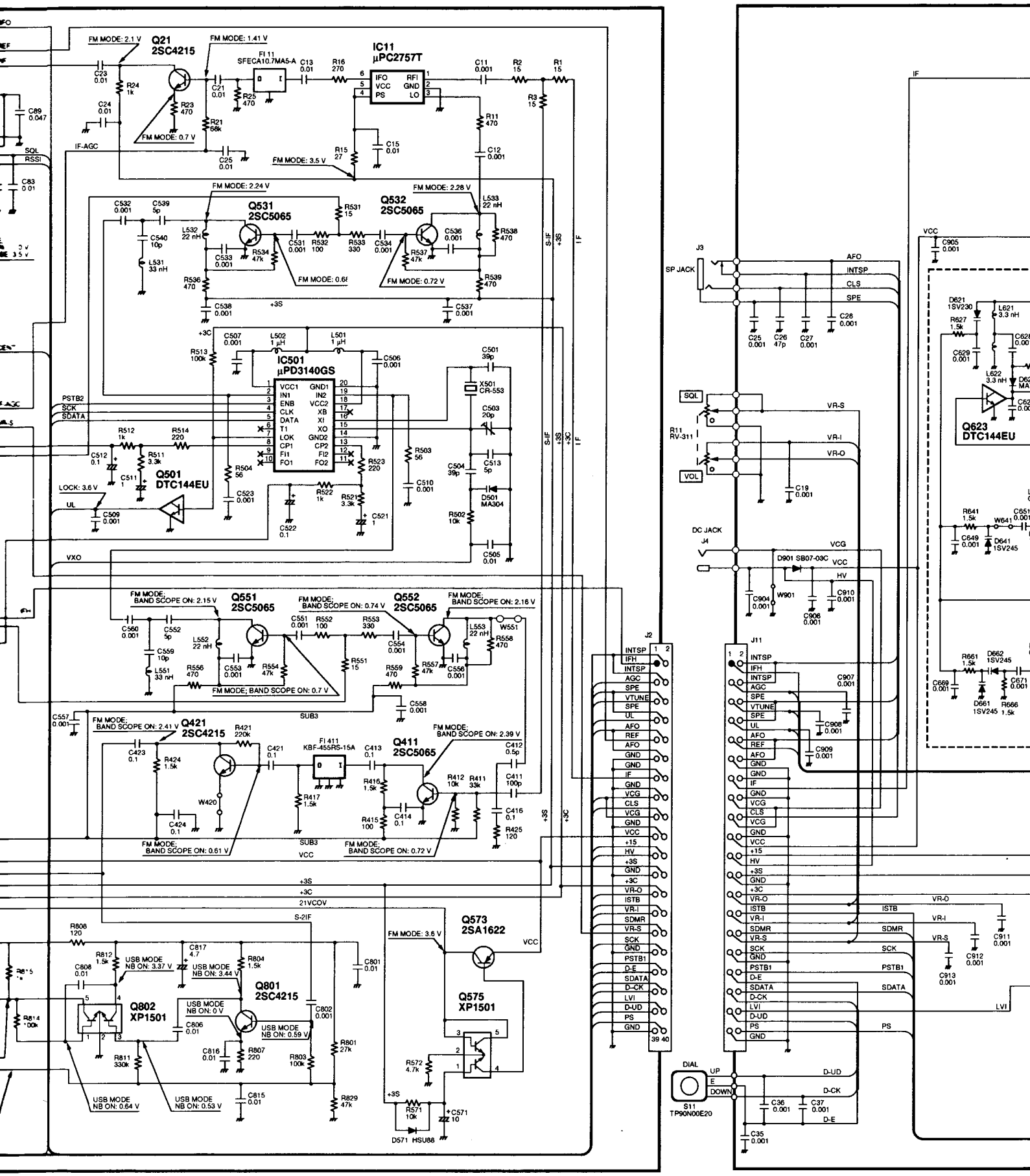
Q21
2SC4215
FM MODE: 2.1 V
FM MODE: 1.41 V
FM MODE: 0.7 V
FI 11
SFECA10.7MA5-A
IC11
μPC2757T
IFO
VCC
PS
RFI
GND
LO
FM MODE: 3.5 V
IF-AGC
SQL
RSSI
FM MODE: 2.24 V
Q531
2SC5065
FM MODE: 2.28 V
Q532
2SC5065
FM MODE: 0.72 V
+3S
+3C
IC501
μPD3140GS
VCC1
IN1
ENB
CLK
DATA
T1
LOK
CP1
FI1
FO1
GND1
IN2
VCC2
XB
XI
XO
GND2
CP2
FI2
FO2
PSTB2
SCK
SDATA
Q501
DTC144EU
LOCK: 3.6 V
UL
VXO
FM MODE:
BAND SCOPE ON: 2.15 V
Q551
2SC5065
FM MODE:
BAND SCOPE ON: 0.74 V
Q552
2SC5065
FM MODE:
BAND SCOPE ON: 2.16 V
FM MODE; BAND SCOPE ON: 0.7 V
SUB3
FM MODE:
BAND SCOPE ON: 2.41 V
Q421
2SC4215
FI 411
KBF-455RS-15A
Q411
2SC5065
FM MODE:
BAND SCOPE ON: 2.39 V
FM MODE:
BAND SCOPE ON: 0.61 V
FM MODE:
BAND SCOPE ON: 0.72 V
VCC
+3S
+3C
21VCOV
S-2IF
Q573
2SA1622
FM MODE: 3.6 V
Q802
XP1501
USB MODE
NB ON: 3.37 V
USB MODE
NB ON: 3.44 V
Q801
2SC4215
USB MODE
NB ON: 0 V
USB MODE
NB ON: 0.59 V
USB MODE
NB ON: 0.64 V
USB MODE
NB ON: 0.53 V
Q575
XP1501
D571 HSU88
J2
INTSP
IFH
INTSP
AGC
SPE
VTUNE
SPE
UL
AFO
REF
AFO
GND
GND
IF
GND
VCG
CLS
VCG
GND
VCC
+15
HV
+3S
GND
+3C
VR-O
ISTB
VR-I
SDMR
VR-S
SCK
GND
PSTB1
D-E
SDATA
D-CK
LVI
D-UD
PS
GND
39 40
J3
SP JACK
AFO
INTSP
CLS
SPE
SQL
R11
RV-311
VOL
VR-S
VR-I
VR-O
DC JACK
J4
VCG
D901 SB07-03C
VCC
HV
J11
DIAL
UP
E
DOWN
S11
TP90N00E20
D-UD
D-CK
D-E
Q623
DTC144EU

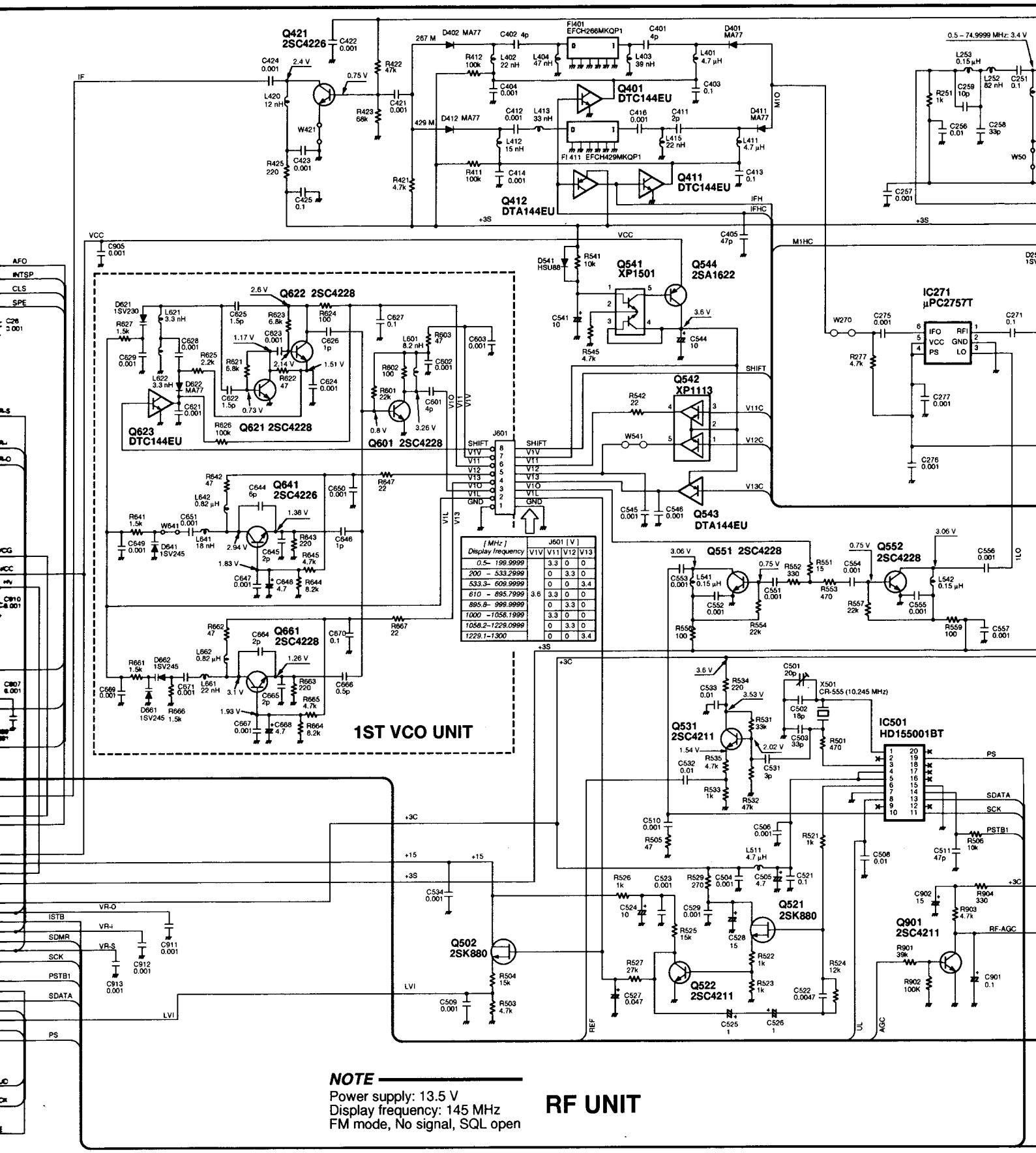
Q421 2SC4226
Q401 DTC144EU
Q411 DTC144EU
Q412 DTA144EU
FI401 EFCH266MKQP1
FI411 EFCH429MKQP1
Q541 XP1501
Q544 2SA1622
IC271 μPC2757T
Q542 XP1113
Q543 DTA144EU
Q622 2SC4228
Q623 DTC144EU
Q621 2SC4228
Q601 2SC4228
Q641 2SC4226
Q661 2SC4228
1ST VCO UNIT
Q551 2SC4228
Q552 2SC4228
Q531 2SC4211
IC501 HD155001BT
X501 CR-555 (10.245 MHz)
Q502 2SK880
Q521 2SK880
Q522 2SC4211
Q901 2SC4211
RF UNIT
NOTE
Power supply: 13.5 V
Display frequency: 145 MHz
FM mode, No signal, SQL open

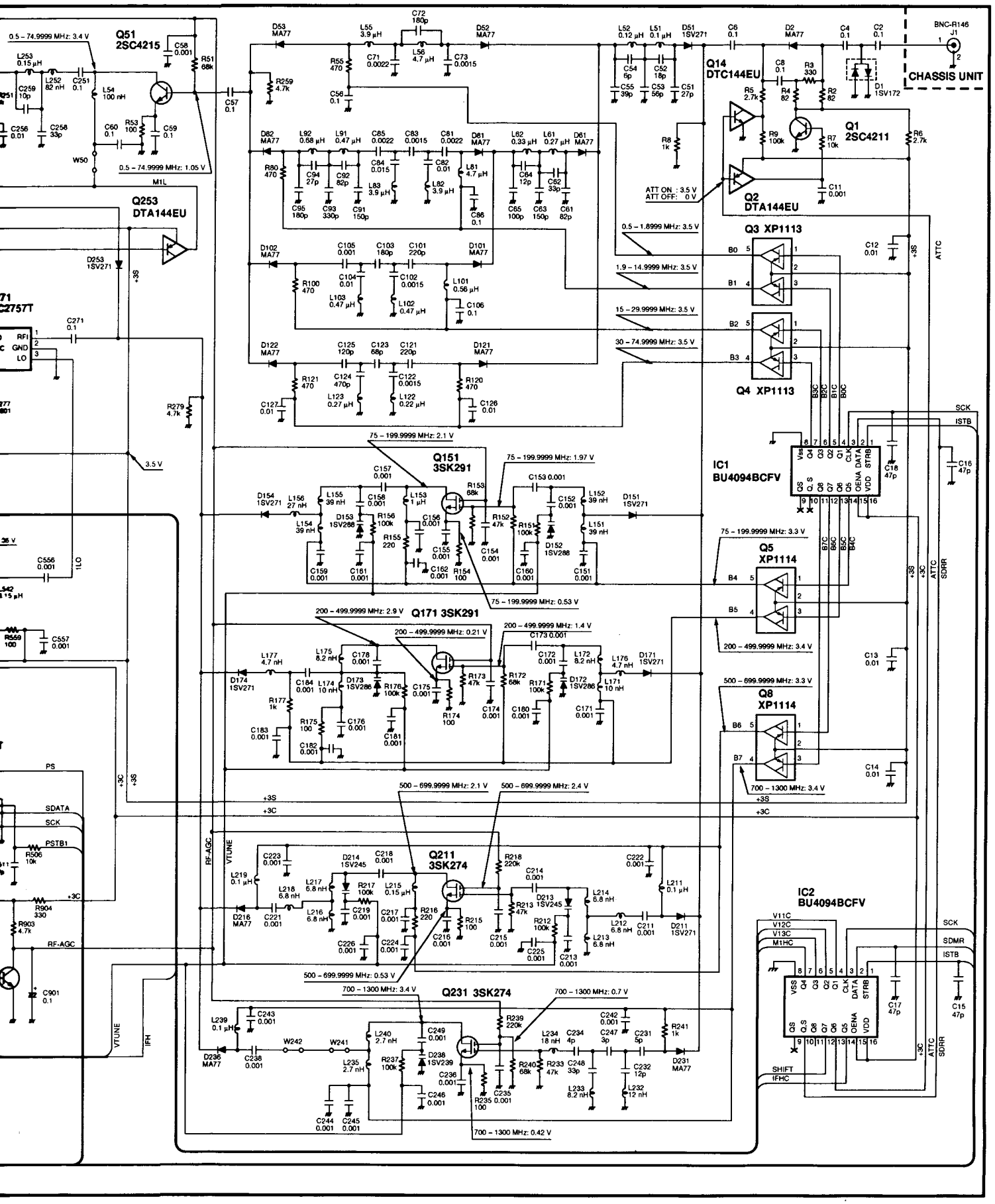
Q51
2SC4215
Q253
DTA144EU
Q14
DTC144EU
Q1
2SC4211
Q2
DTA144EU
Q3 XP1113
Q4 XP1113
Q151
3SK291
Q171 3SK291
Q5
XP1114
Q8
XP1114
Q211
3SK274
Q231 3SK274
IC1
BU4094BCFV
IC2
BU4094BCFV
CHASSIS UNIT
BNC-R146
0.5 – 74.9999 MHz: 3.4 V
0.5 – 74.9999 MHz: 1.05 V
0.5 – 1.8999 MHz: 3.5 V
1.9 – 14.9999 MHz: 3.5 V
15 – 29.9999 MHz: 3.5 V
30 – 74.9999 MHz: 3.5 V
75 – 199.9999 MHz: 2.1 V
75 – 199.9999 MHz: 1.97 V
75 – 199.9999 MHz: 0.53 V
75 – 199.9999 MHz: 3.3 V
200 – 499.9999 MHz: 2.9 V
200 – 499.9999 MHz: 0.21 V
200 – 499.9999 MHz: 1.4 V
200 – 499.9999 MHz: 3.4 V
500 – 699.9999 MHz: 3.3 V
500 – 699.9999 MHz: 2.1 V
500 – 699.9999 MHz: 2.4 V
500 – 699.9999 MHz: 0.53 V
700 – 1300 MHz: 3.4 V
700 – 1300 MHz: 0.7 V
700 – 1300 MHz: 0.42 V
ATT ON : 3.5 V
ATT OFF: 0 V
SCK
ISTB
SDMR
SHIFT
IFHC
SDATA
PSTB1
RF-AGC
VTUNE
ATTC
SDRR
+3S
+3C
3.5 V

Icom Inc.

6-9-16, Kamihigashi, Hirano-ku, Osaka 547, Japan
Phone : 06 793 5302
Fax : 06 793 0013

Icom America Inc.

<Corporate Headquarters>
2380 116th Avenue N.E., Bellevue, WA 98004, U.S.A.
Phone : (425) 454-8155
Fax : (425) 454-1509
Telex : 152210 ICOM AMER BVUE

<Customer Service>
Phone : (206) 454-7619

Icom Canada

A Division of Icom America Inc.
3071 #5 Road, Unit 9, Richmond, B.C., V6X 2T4, Canada
Phone : (604) 273-7400
Fax : (604) 273-1900

Icom (Australia) Pty. Ltd.

A.C.N. 006 092 575
290-294 Albert Street, Brunswick, Victoria, 3056, Australia
Phone : 03 9387 0666
Fax : 03 9387 0022

Icom (Europe) GmbH

Communication Equipment
Himmelgeister Str. 100, D-40225 Düsseldorf, Germany
Phone : 0211 346047
Fax : 0211 333639

Icom Telecomunicaciones s.l.

"Edificio Can Castanyer" Crta. Gracia a Manresa km. 14,750
08190 Sant Cugat Del Valles Barcerona, SPAIN
Phone : (3) 589 46 82
Fax : (3) 589 04 46

Icom (UK) Ltd.

Unit 9, Sea St., Herne Bay, Kent, CT6 8LD, U.K.
Phone : 01227 741741
Fax : 01227 741742
Telex : 317210 BUREAU G

Icom France S.a

Zac de la Plaine, Rue Brindejonc des Moulinais
BP 5804, 31505 Toulouse Cedex, France
Phone : 561 36 03 03
Fax : 561 36 03 00
Telex : 521515 ICOM FRA

Count on us!

Icom Inc.
6-9-16, Kamihigashi, Hirano-ku, Osaka 547, Japan

A-5410KG-S
Printed in Singapore
Copyright © 1997 by Icom Inc.