SHARP SERVICE MANUAL

CDDE: 00ZER1970SM-E

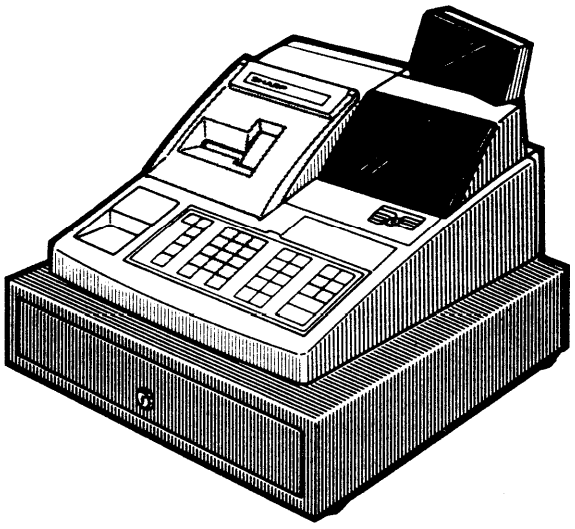

ELECTRIC CASH REGISTER

MODEL ER-1970

SRV KEY : LKGIM7113RCZZ
PRINTER : CR-802A

CONTENTS

CHAPTER 1. SPECIFICATION 1
CHAPTER 2. OPTIONS 3
CHAPTER 3. HARDWARE DESCRIPTION 4
CHAPTER 4. TEST FUNCTION 11
CHAPTER 5. CIRCUIT DIAGRAM & PWB LAYOUT 13
PARTS GUIDE

Parts marked with "⚠" is important for maintaining the safety of the set. Be sure to replace these parts with specified ones for maintaining the safety and performance of the set.

SHARP CORPORATION

This document has been published to be used for after sales service only.
The contents are subject to change without notice.

(Note)

One lead wire of R29 (220 Ω) in the service unit of the main PWB is disconnected to prevent against discharging. When replacing the main PWB, therefore, solder R29 before use.

CHAPTER 1. SPECIFICATION

1-1. Outline

This model basically is a successor to the current model ER-1772S mainly used in pub & bar market. However, this model is not designed only for the market place of pub, but also for other markets like fast food shops, flower shops, pedlars, etc. which need a cash register available of quick operation and water spill proof NOTE: Only the parts of keyboard and printer are covered as water spill proof with flat keyboard and printer cover.
In order to meet the updated requirements from the various markets like mentioned above as well as pub, ER-1970 has a lot of functions as below.

Main features:

- Low profile style cabinet
- Durable drum type receipt & journal printer
- Water spill proof printer cover as standard
- Spil proof flat keyboard
- Free programmable keyboard layout (except for paper feed keys)
- 3 auto VAT or add-on tax calculation
- 10 standard up to 30 departments
- Standard 150 PLUs/Sub departments with 3-digits free code
- 4 Cashiers with overlap entry function
- Itemized and total (programmable) after receipt, available with overlap cashier entry
- Max. 4 media keys (1-Cash key, 1-Check key, 2-Credit key)
- Sub-total void function
- Drawer open alarm function
- Currency conversion function
- Compulsory Cash Declaration
- Half pint (only half price by half pint key)

1-2. Reference documents

(1) Cash register, basic manual

(2) CR-802 Printer service manual (00ZCR812SM/-E)

(3) CR-802A Printer service manual (00ZCR802ASM/M)

(4) ER-1970 Programming manual (00ZER1970PG-E)

(5) ER-1970 Installation manual (00ZER1970IM-E)

1-3. Appearance

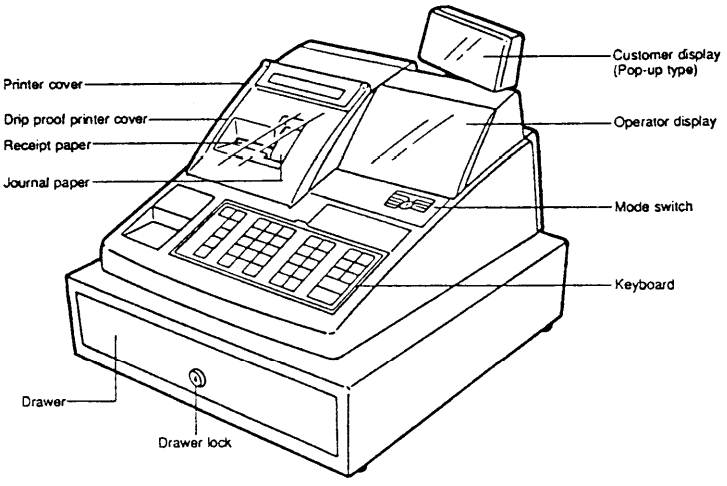

1-4. Rating

External dimensions:	420(W) x 426(D) x 288(H) mm (When the customer display is popped up : 349.5(H) mm)
Weight:	13.2kg
Power source:	Official (nominal) voltage and trequency
Power consumption:	Stand-by 12 W Operating 34 W
Working temperature:	32 to 104°F (0 to 40°C)

1-5. Keyboard

(1) Standard keyboard layout

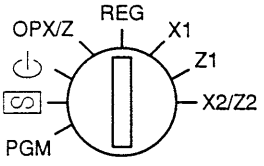

↑ RECE-IPT	↑ JOUR-NAL		⊗	•	CL		5	10		AMT	PLU
	E		7	8	9		4	9		#/TM	RCPT
	D		4	5	6		3	8		CH	CR
	B		1	2	3		2	7		ST	
	A		0		00		1	6		TL	

(2) Key top name

0 00 ~ 9	:	Numeric keys
•	:	Decimal point key
CL	:	Clear key
⊗	:	Multiplication key
1 ~ 10	:	Department keys
↑ RECEIPT ↓ JOURNAL	:	Paper feed keys (receipt & journal)
A B D E	:	Cashier keys
AMT	:	Amount enter for sub-dept key
PLU	:	PLU key
#/TM	:	Non-add code/time key
RCPT	:	Receipt print key
CH	:	Check key
CR	:	Credit key
ST	:	Sub-total key
TL	:	Total/amount-tendered key

1-6. Mode key switch position

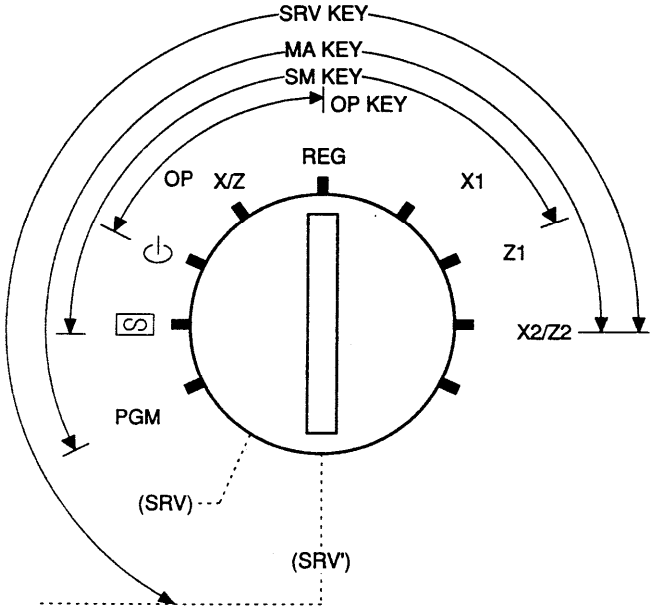

Note: 1. The key can be removed in the REG or ⏻ position.
2. Service mode is not prompted on the display.

[Mode switch positions]

SRV': Service mode (To reset the timer)
SRV: Service mode (SRV programming)
PGM: Program mode
: Void mode
⏻: Power off mode (AC power remains on)
OPX/Z: Clerk sales reading and resetting mode
REG: Registration mode
X: Reading of daily sales (X report)
Z: Resetting of daily sales (Z report)
X2/Z2: Reading and resetting of any periodic sales totals

[Mode select keys]

SRV: Service keys: LKGIM7113RCZZ
MA: Manager key: LKGIM7110RCZZ
SM: Sub manager key: LKGIM7129RCZZ
OP: Operator key: LKGIM7111RCZZ

Note: SRV key is not included in the accessories. (Supplied service part.)

1-7. Operator display

Display device:	Fluorescent display tube
Number of lines:	1 line
Number of positions:	9 (all of 9 positions are used) 7-segment type
Color of display:	Green
Character size:	10(H) x 4.5(W) mm

Operator display layout:

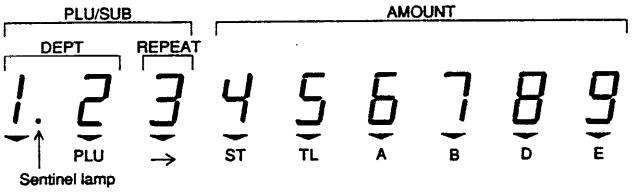

1-8. Customer display (Pop-up type)

Display device:	Fluorescent display tube
Number of lines:	1 line
Number of positions:	9 (all of 9 positions are used) 7-segment type
Color of display:	Green
Character size:	10(H) x 4.5(W) mm

Layout:

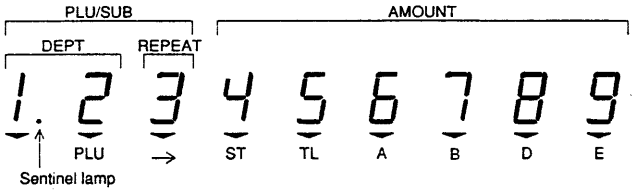

1-9. Printer CR-802A

1. Receipt/journal printer

Printing system:	Wheel
Number of columns:	10
Number of stations:	2
Max. number of characters:	10 characters/line
Printing speed:	2.6 lines/second
Roll paper:	44.5 ± 0.5 mm(W) 83φmm(Max Diameter) DPAPR1006CSZZ
Character size:	3.2(H) x 1.7(W) mm
Receipt type selection:	1 type
Inking:	Ink roller (NROLR6638RCZZ)
Stamp:	Yes (Ink refill enable)
Stamp ink:	UINK-1001CCZZ
Max. size of stamp:	20(H) x 30(W) mm

Printing wheel layout
Part code: 00BM712002260
Price rank: BK

PL	Z	TX	•	•	•	•	GT	CA	@	
–	–	–	–	–	–	–	#	CH	1	
★	★	★	★	★	★	★	%	CR	2	
0	0	0	0	0	0	0	0	A	←	
1	1	1	1	1	1	1	1	B	→	
2	2	2	2	2	2	2	2	D	◀	
3	3	3	3	3	3	3	3	E	▶	
4	4	4	4	4	4	4	4	TX	ST	
5	5	5	5	5	5	5	5	T	TL	
6	6	6	6	6	6	6	6	⊖	Q	
7	7	7	7	7	7	7	7	X	∞	
8	8	8	8	8	8	8	8	EX	NS	
9	9	9	9	9	9	9	9	RF		

1-10. Main drawer

Outer case:	Metal SK423 type middle seize
Separation from the main unit:	Enable(Under cabinet and noise chassis kit must be prepared from service option)
Open sensor:	Standard
Lock:	Yes
Lock/Open key position:	Front side
Money case:	4B/8C

CHAPTER 2. OPTIONS

2-1. Service options

No.	Name	Parts code	Price rank	Description
1	Service key	LKGIM7113RCZZ	EB	
2	Noise chassis	DKIT-3381RCZZ	GN	The bottom cab is required to separate the main body and the drawer. GCABA7081RCZZ---Bottom cab
3	Drawer fixing kit	DKIT-8633RCZZ	FQ	

2-2. Supplies

No.	Name	Pants code	Description
1	Ink	UINK-1001CCZZ	5cc
2	Ink roller	NROLR6638RCZZ	Purple
3	Roll paper	DPAPR1006CSZZ	5 rolls

CHAPTER 3. HARDWARE DESCRIPTION

Circuit block diagram

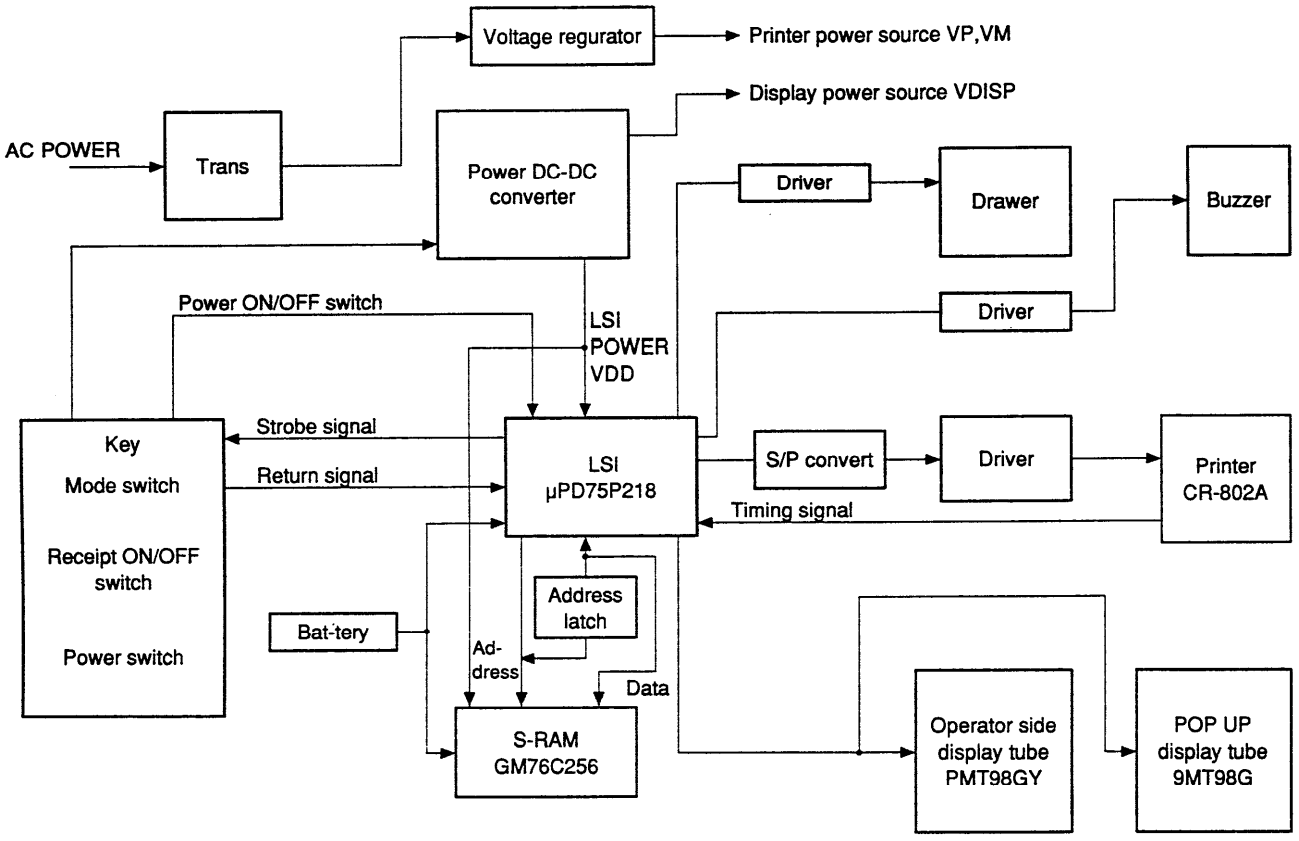

Fig. 2-1

3-1. uPD75P218 Terminal signal

No.	Name	Description	I/O
1	S3	Key strobe/Display tube segment signal (d)	out
2	S2	Key strobe/Display tube segment signal (c)	out
3	S1	Key strobe/Display tube segment signal (b)	out
4	S0	Key strobe/Display tube segment signal (a)	out
5	P00	Power off signal	in
6	P01	Print data shift clock output	out
7	P02	Print data output	out
8	P03	Mode switch/PF key return signal	in
9	α	Printer timing signal input	in
10	P11	Key return signal	in
11	P12	Key return signal	in
12	P13	Key return signal	in
13	-CS1	RAM chip select signal	out
14	-WE	RAM write signal	out
15	P22	Printer motor on signal	out
16	P23	Address latch enable for RAM	out
17	P30	Key return signal	in
18	P31	Key return signal	in
19	P32	Drawer open sense signal	out
20	A12	RAM Address bus A12	out
21	A8	RAM Address bus A8	out
22	A9	RAM Address bus A9	out
23	A11	RAM Address bus A11	out
24	A10	RAM Address bus A10	out
25	D7/A0	Data bus D2/Address bus A0	in/out
26	D6/A1	Data bus D1/Address bus A1	in/out
27	D5/A4	Data bus D0/Address bus A4	in/out
28	D4/A2	Data bus D7/Address bus A2	in/out
29	PP0	Buzzer signal	out
30	X1	X'tal terminal 4.19MHz	in
31	X2	X'tal terminal 4.19MHz	in
32	VSS	GND	in
33	XT1	Timer X'tal terminal 32.768KHz	in
34	XT2	Timer X'tal terminal 32.768KHz	in
35	D0/A7	Data bus D0/Address bus A7	in/out
36	D1/A6	Data bus D1/Address bus A6	in/out
37	D2/A5	Data bus D2/Address bus A5	in/out
38	D3/A3	Data bus D3/Address bus A3	in/out
39	-RESET	Reset signal input	in
40	T0	Display tube 1st digit drive signal	out
41	T1	Display tube 2nd digit drive signal	out
42	T2	Display tube 3rd digit drive signal	out
43	T3	Display tube 4th digit drive signal	out
44	T4	Display tube 5th digit drive signal	out
45	T5	Display tube 6th digit drive signal	out
46	T6	Display tube 7th digit drive signal	out
47	T7	Display tube 8th digit drive signal	out
48	T8	Display tube 9th digit drive signal	out
49	T9	NU	
50	A14	RAM Address bus A14	
51	A13	RAM Address bus A13	
52	PH1	Printer magnet data output enable signal	out
53	PH0	Printer magnet data strobe signal	out
54	S11	Key strobe signal	out
55	S10	Key strobe signal	out
56	Vload	Power (-20V) for display	in
57	Vpre	Power (-4V) for display	in
58	S9	Key strobe signal	out
59	S8	Key strobe signal, Display tube segment (▼)	out
60	S7	Key strobe/Display tube segment (DP) signal	out
61	S6	Key strobe/Display tube segment signal (g)	out
62	S5	Key strobe/Display tube segment signal (f)	out
63	S4	Key strobe/Display tube segment signal (e)	out
64	VDD	Power (+5V)	in

3-2. Circuit description

1) RAM Read/write circuit

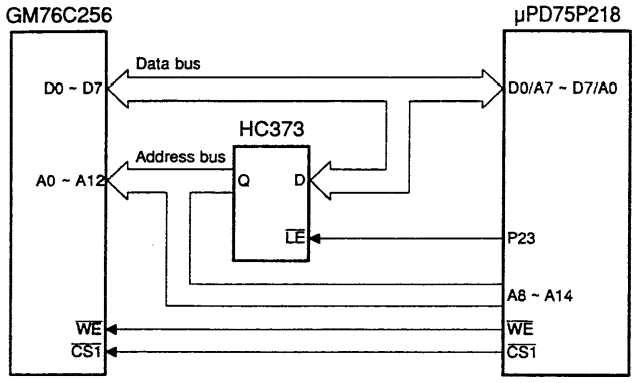

Fig. 2-2

Since the 8-bit data bus of the μPD75P218 shares the same lines with the 8-bit address bus of the GM76C256, selection of the RAM chip by the μPD75P218 causes the HC373 to latch the 8-bit address when P32 of μPD75P218 is inputted.

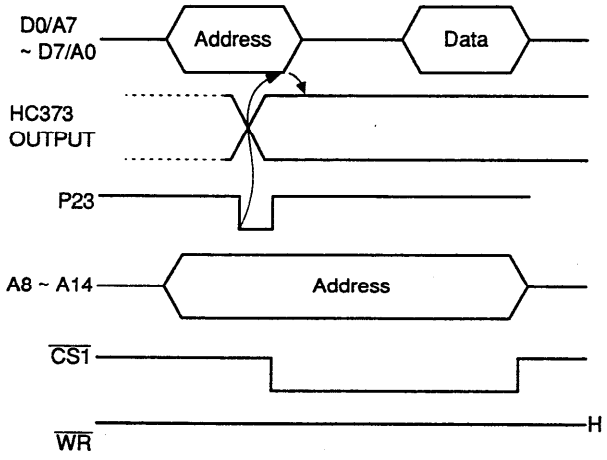

RAM data read timing

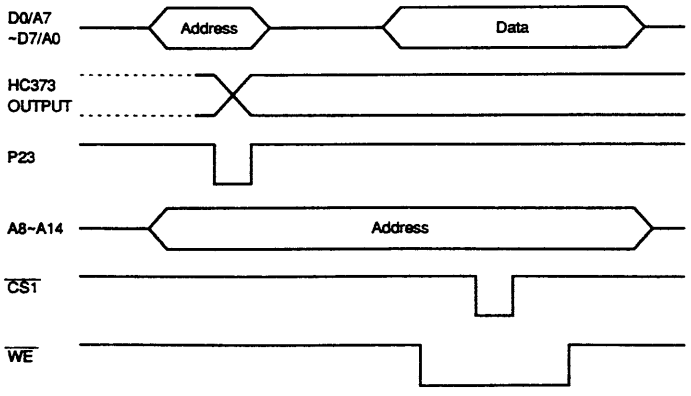

RAM data write timing

2) Battery circuit

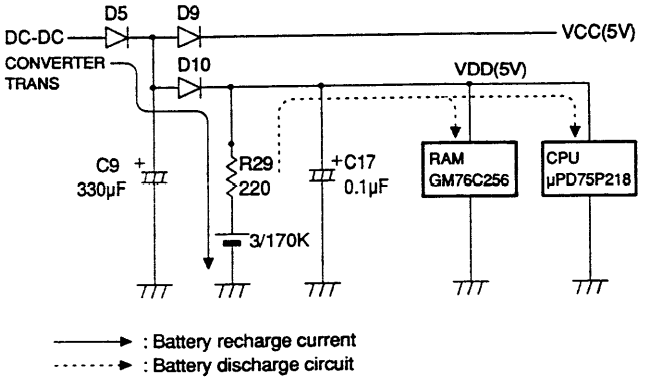

Fig. 2-3

3) P-OFF circuit

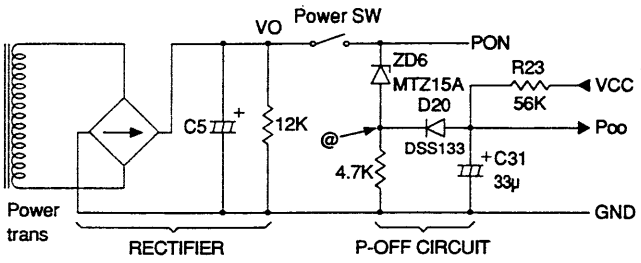

Fig. 2-4

At power on

When P-ON voltage reaches 16V, the current flows through the zener diode (MTZ15A) so that the level at point @ goes high.
The level of P-OFF rises as VCC increases. As a result, the P-OFF signal changes from low to high level.

At power off

When the power is turned off, the P-ON voltage drops under 15V causing the zener diode to stop current flow, which causes potential at point @ to drop.

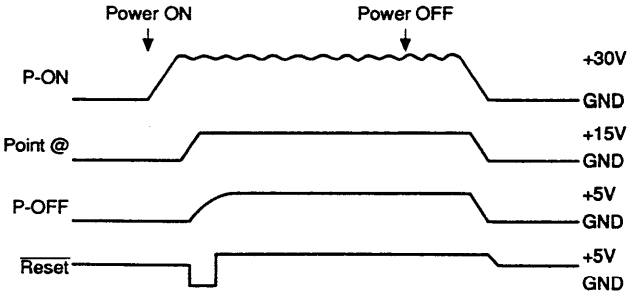

Fig. 2-5

4) Key and switch

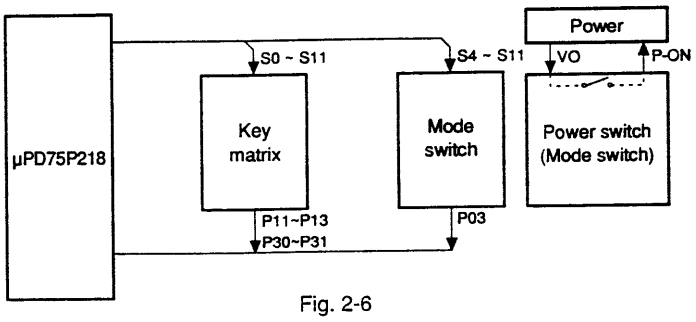

Fig. 2-6

S0 ~ S11 : Key scan signal
P11 ~ P13, P30 ~ P31 : Key return signal
V0 : Power switch
P-ON : Mode switch
P03 : Mode switch return signal

5) Display control

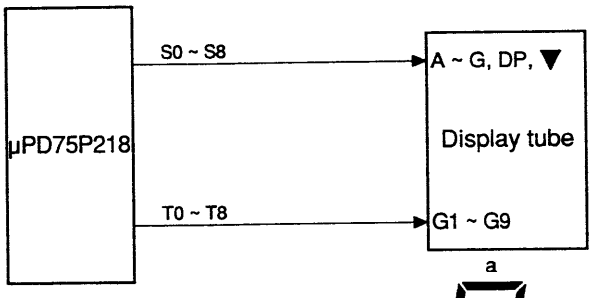

a ~ g : Display segment
DP : Decimal point
▼ : Indicator

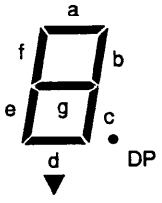

Fig. 2-7

6) Printer control

Block diagram

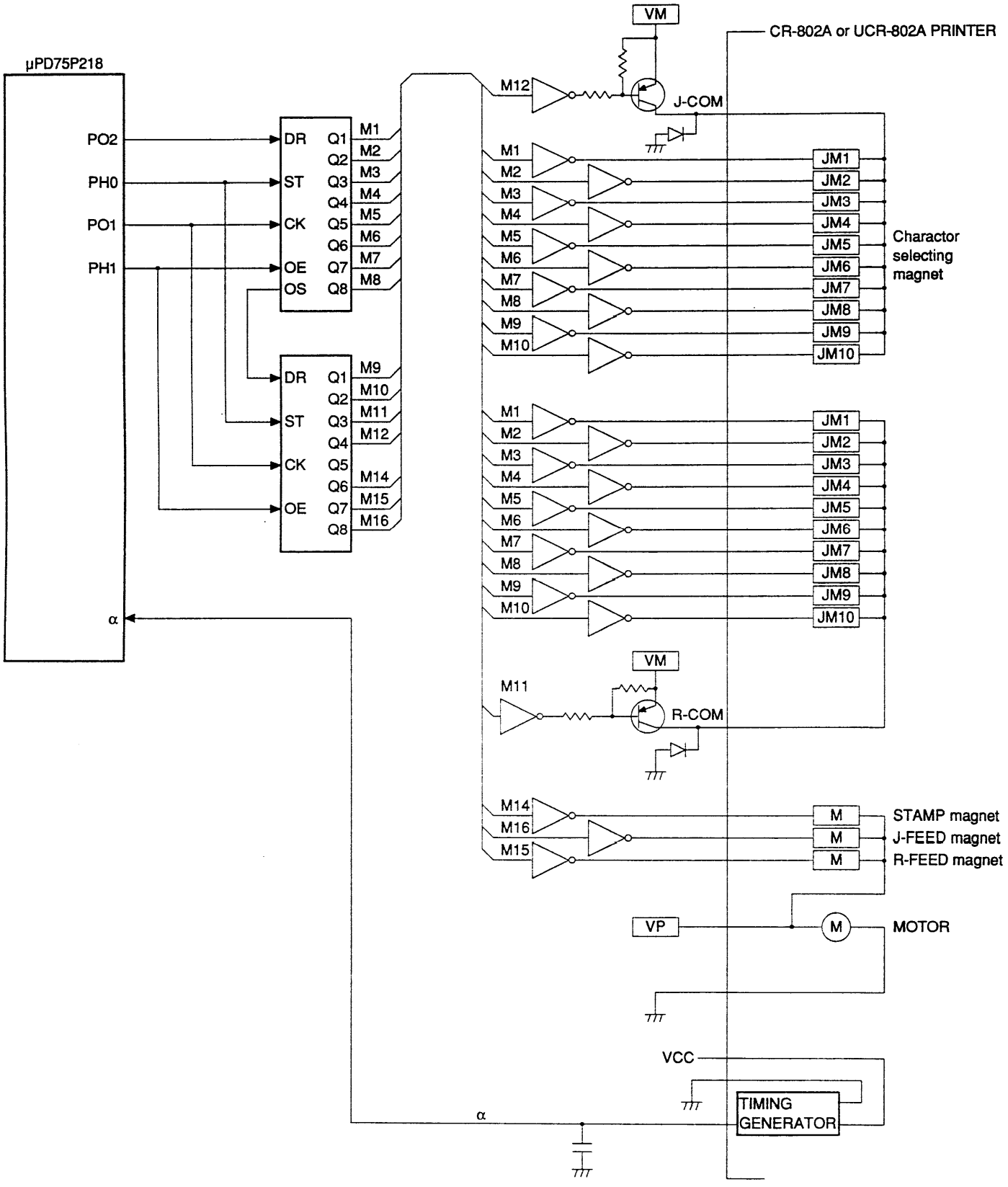

Fig. 2-8

PO2 : Print data output (serial output)
PO1 : Print data shift clock
PH0 : Printer magnet data strobe signal
PH1 : Printer magnet data output enable signal
M1
~ : Printer magnet drive signal
M10
VP : Printer power
α : Printer timing signal
M11 : Receipt side magnet common
M12 : Journal side magnet common
M14 : STAMP drive
M15 : Receipt feed
M16 : Journal feed

Printer control procedure

Printer is controlled mainly with CPU signals PH0, PH1, PO1, PO2, α, and P22.

1) Make P22 high to drive the motor with the CPU. This activates VP to rotate the printer motor.
2) α (Timing Signal) from the printer allows output of the first line print data.
3) Print data is outputted serial-parallel converted in TC4094 and internally latched by the strobe signal of PH0.
   When PH1 output enable signal is inputted. The latched data is outputted as M1~M16.
4) The next α is detected and procedure 3) is repeated.

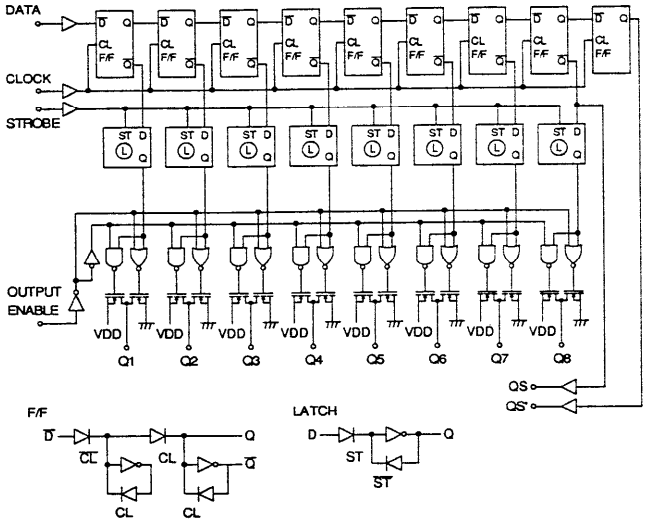

TIMING

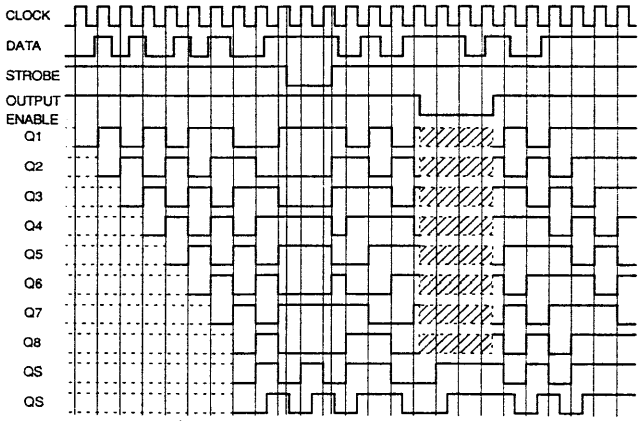

TC4094 internal circuit

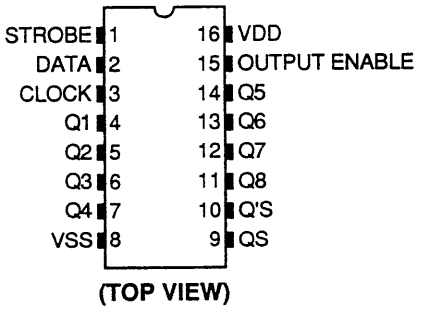

7) Printer motor drive circuit

BLOCK diagram

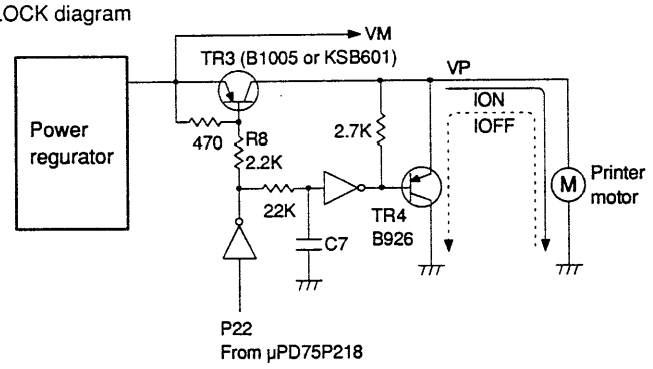

Fig. 2-9

A high on P22 of the μPD75P218 makes TR3 active and TR4 inactive so that current flows through the motor to run. On the other hand, a low on P22 turns off TR3 and turns on TR4 stop the motor.

8) Drawer control

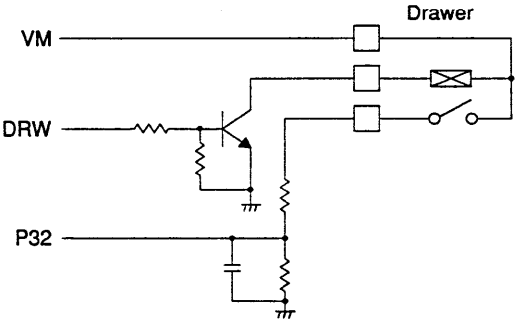

Fig. 2-10

The drawer magnet drive is controlled by turning on/off the output DRW signal of TC4094.
Drawer open sense is performed by sensing P32 port level.

9) Power circuit

(1) Block diagram

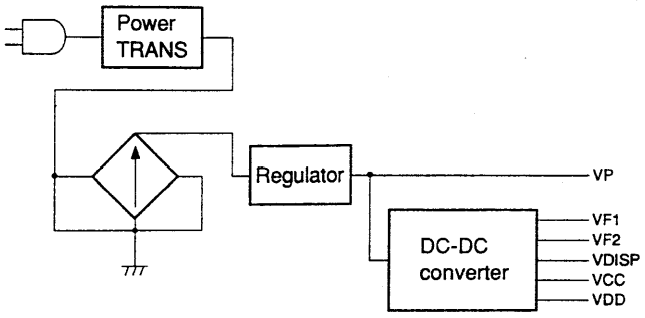

Fig. 2-11

VP : +20V
VF1, VF2 : –4.3V AC
VDISP : –25V
VCC : +5V
VDD : +5V

(2) Regulator circuit

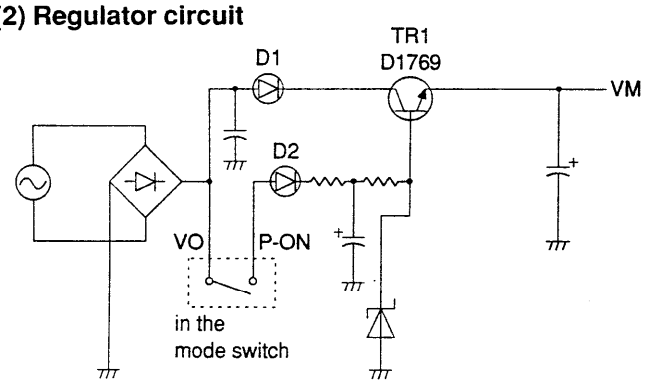

Fig. 2-12

1) If VO-P-ON was not shorted within the mode switch (power off), TR1 remains inactive as no voltage is applied to the base of TR1.
2) If VO-P-ON was shorted, TR1 goes active as voltage is added to the base of TR1.
3) With activation of TR1, the voltage VM begins to increase.

(3) DC-DC converter

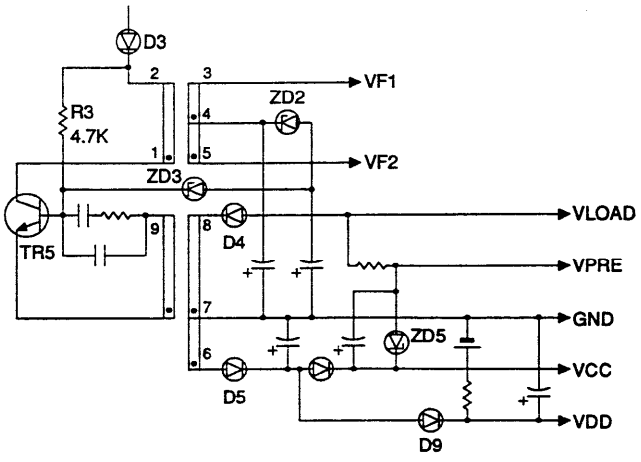

Fig. 2-13

The bias is added to the base of TR5 when the power switch is turned on, so that TR5 starts self-oscillation. VLOAD from the secondary side is fed back through the zener diode ZD3 to suppress voltage fluctuation on the secondary side.

10) Buzzer control

The buzzer operates in excitement oscillation system, and outputs about 2KHz from the CPU PPO port (pulse output possible).

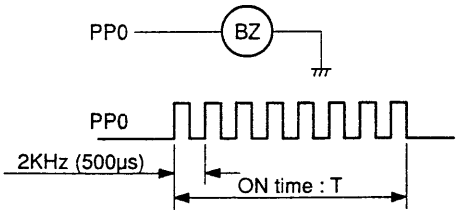

Key catch sound : T ≒ 25ms
Miss operation sound : T ≒ 250ms
Continuous error sound : Until CL key is on

CHAPTER 4. TEST FUNCTION

4-1. Test list/Key operation

No.	Description	Key operation
1	Mode switch test	1 → ST
2	Key test	***02 → ST
3	Display test	3 → ST
4	Buzzer test	4 → ST
5	Not used	5 → ST
6	Drawer open/open sense test	6 → ST
7	Printer test	7 → ST
8	RAM test	8 → ST
9	Key position code test	9 → ST
10	Sequential test	***10 → ST
11	CPU mask version test	11 → ST

*** = Key layout sum check data = 115

4-2. Test description

1) Mode switch test

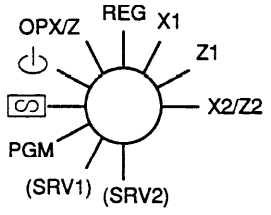

Mode switch operation	Display	
SRV1	1	1
PGM	1	2
	1	3
OPX/Z	1	4
REG	1	5
X1	1	6
Z1	1	7
X2/Z2	1	8

End : Return to SRV1.
Normal end print : 1
Error print : -------1E

2) Key test

Press all the keys excluding the TL key, and compare the total of the hard codes and the previously set sum code.

Display : 2 5-1 A: 10, B: 11

End : Press the TL key.
Normal end print : 2
Error print : -------2E

3) Display test

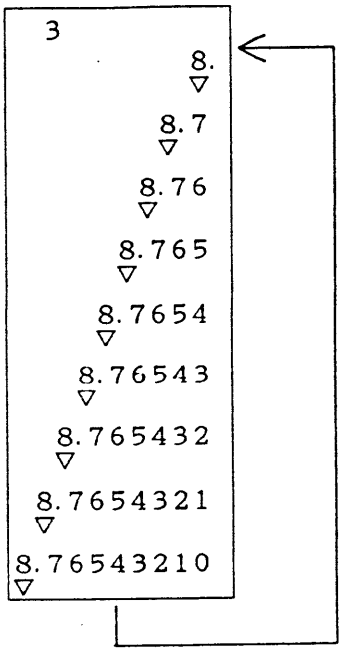

End : Press any key.
Normal end print : 4
Error print : -------4E

4) Buzzer test

End : Press any key.
Normal end print : 4
Error print : -------4E

5) Not used

6) Drawer open/open sense test

Display : 6 0 Drawer open
6 C Drawer close

End : Press any key.
Error print : 6

7) Print test

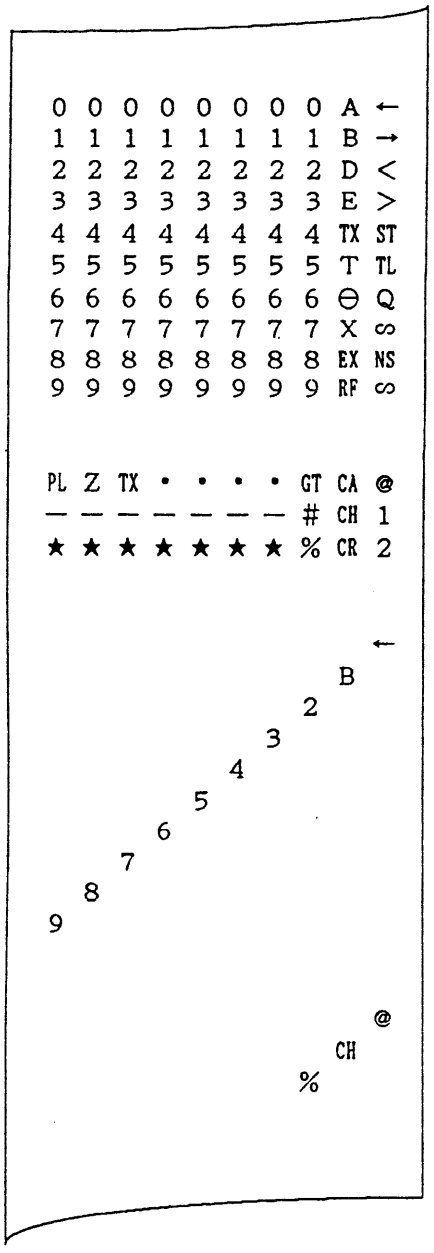

Display : 7

End : Press any keys continuously.

8) RAM test

Check write/read of address VS. data.

Add \ *	0	1	2	3	4	5	6	7	8	9	A	B	C	D	E	F
001*	0	1	2	3	4	5	6	7	8	9	A	B	C	D	E	F
002*	F	0	1	2	3	4	5	6	7	8	9	A	B	C	D	E
004*	E	F	0	1	2	3	4	5	6	7	8	9	A	B	C	D
008*	D	E	F	0	1	2	3	4	5	6	7	8	9	A	B	C
010*	C	D	E	F	0	1	2	3	4	5	6	7	8	9	A	B
020*	B	C	D	E	F	0	1	2	3	4	5	6	7	8	9	A
040*	A	B	C	D	E	F	0	1	2	3	4	5	6	7	8	9
080*	9	A	B	C	D	E	F	0	1	2	3	4	5	6	7	8
100*	8	9	A	B	C	D	E	F	0	1	2	3	4	5	6	7
200*	7	8	9	A	B	C	D	E	F	0	1	2	3	4	5	6
400*	6	7	8	9	A	B	C	D	E	F	0	1	2	3	4	5
800*	5	6	7	8	9	A	B	C	D	E	F	0	1	2	3	4
	Data															

Display : 8

Normal end print : 8

Error print : -------8E

9) Key position code test

Print hard codes of pressed keys excluding the TL key.

Print : 9 10 Hard code: *0 ~ *9

9 1A Hard code: *A, *B

End : Press the TL key.

10) Sequential test

Test No. 1 through No. 8 are performed continuously.
The display test and the print test are completed in one cycle. After completion of Test No. 8, this test is completed automatically.

11) CPU mask version test

MP CPU (PROM/MASK) or the program version is printed.

End : Press the TL key.

Print : 11 1.00 Test version: 0.00 ~
MP version: 1.0 ~

CHAPTER 5. CIRCUIT DIAGRAM & PWB LAYOUT

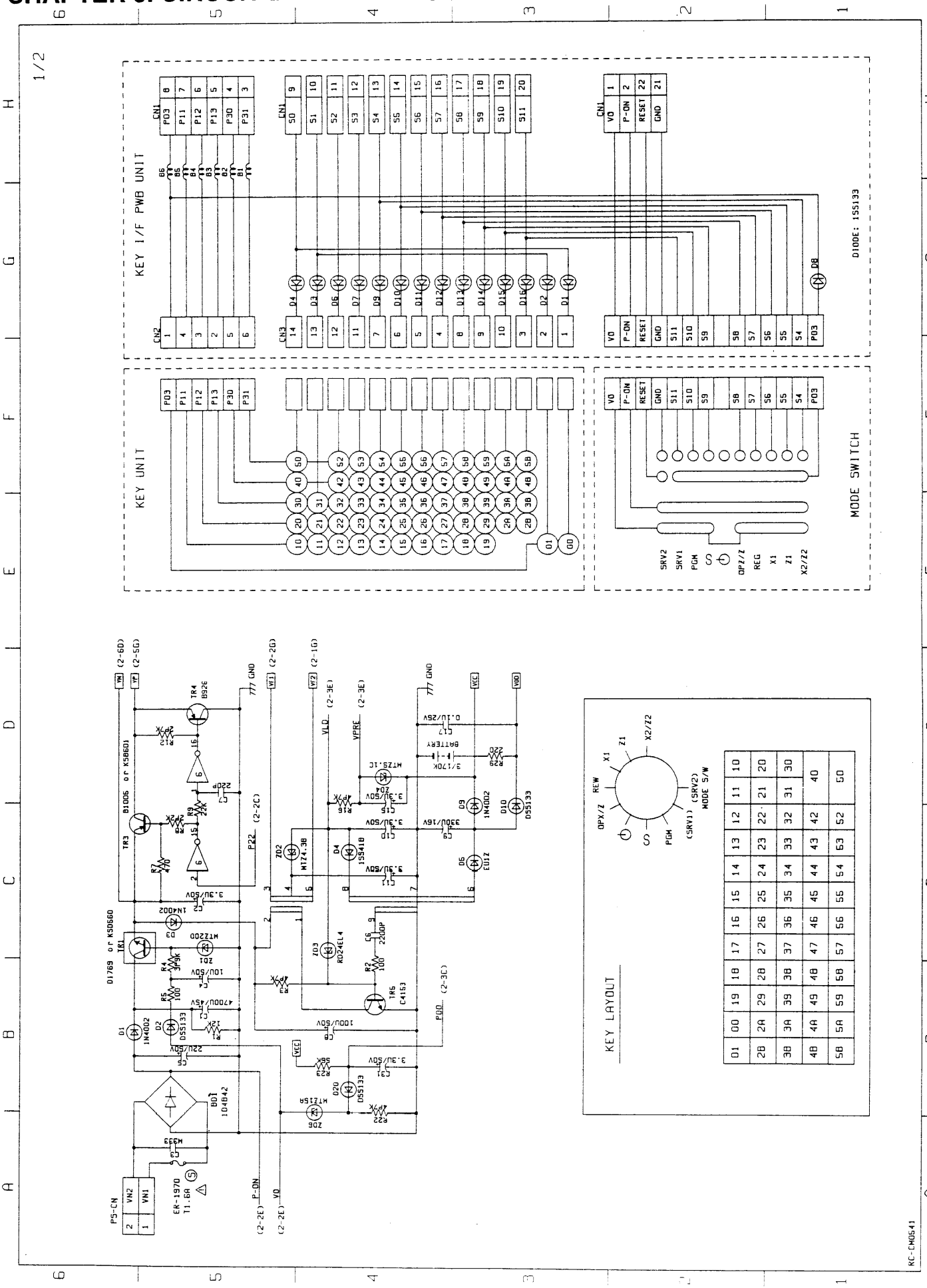

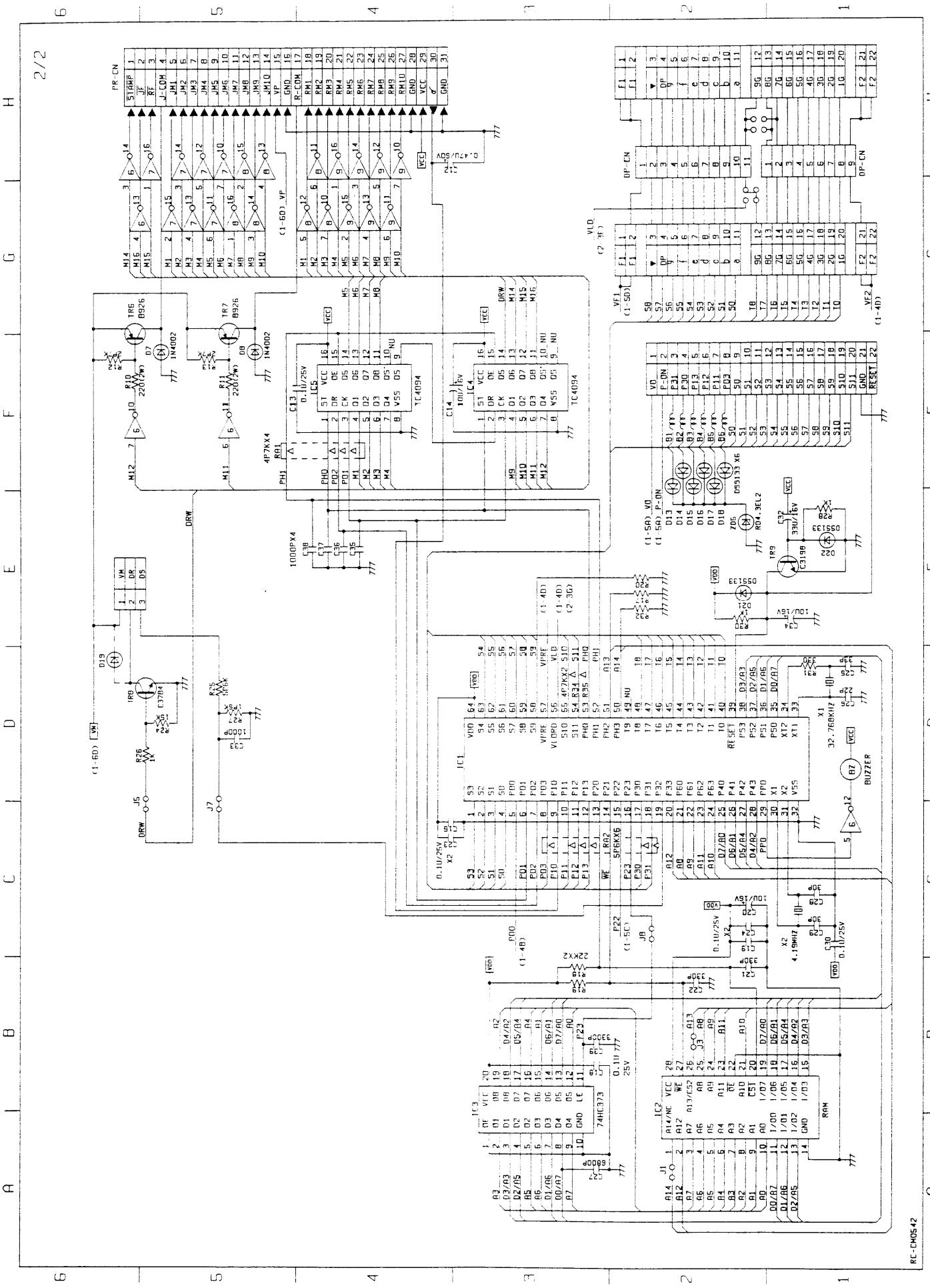
2/2
PR-CN
DP-CN
IC1
IC2
IC3
IC4
IC5
TC4094
74HC373
RAM
BUZZER
X1
32.768KHZ
X2
4.19MHZ
RE-CM0542

PWB LAYOUT

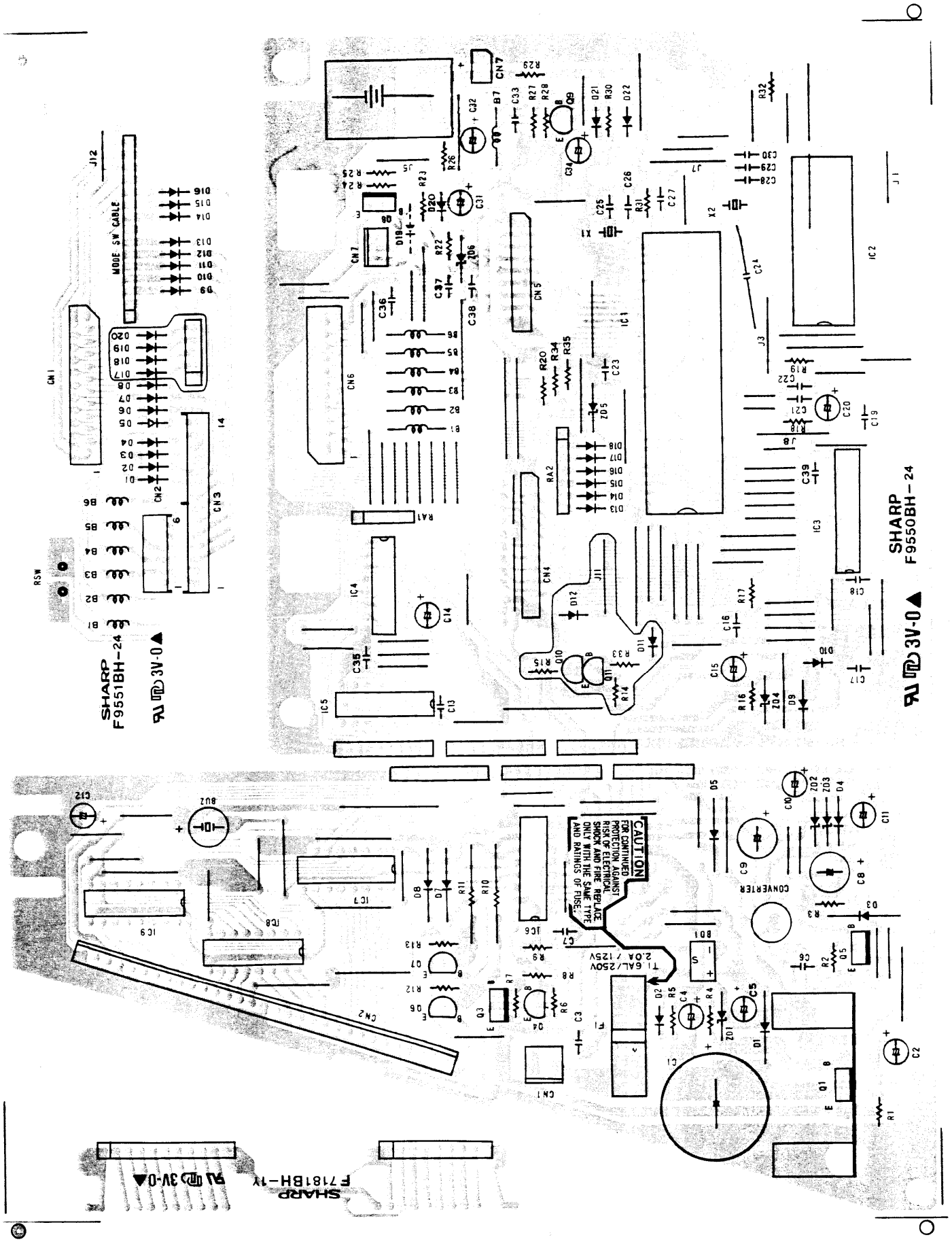
SHARP
F9551BH-24
3V-0
SHARP
F9550BH-24
3V-0
SHARP
F7181BH-1Y
3V-0
CAUTION
FOR CONTINUED PROTECTION AGAINST RISK OF ELECTRICAL SHOCK AND FIRE REPLACE ONLY WITH THE SAME TYPE AND RATINGS OF FUSE.
T1.6AL/250V
2.0A/125V
CONVERTER
MODE SW CABLE

SHARP PARTS GUIDE

MODEL ER-1970

(for KA, KB)
PRINTER : UCR802A

CONTENTS

1 Exteriors
2 Keyboard unit
3 Packing material & Accessories
4 Drawer box unit (SK423 type)
5 Main PWB unit
6 Key i/F PWB unit
7 Pop-up PWB unit
8 Articles for consumption
9 AC cord
■ Index

Because parts marked with "⚠" is indispensable for the machine safety maintenance and operation, it must be replaced with the parts specific to the product specification.

Table of destinations

SELECTION CODE	COUNTRIES
U	U. S. A., Guam
A	Canada
TS	Germany
TQ	SEEG territory other than Germany (Stamp : English)
TR	SEEG territory other than Germany (Stamp : Spanish)
KB	U. Kingdom
KA	Australia

SELECTION CODE	COUNTRIES
SB	Saudi Arabia (127V area)
SBA	Saudi Arabia (220V area)
SC	Taiwan
SD	Venezuela
SE	Hong Kong
SG	Lebanon, Syria, Greece, Pakistan, Iran, Egypt, Thailand, Iraq, Mauritius, Seychelles, Tahiti, Jordan, Sudan, Turkey
SH	South Africa (U. S. A. version)
SHE	South Africa (Europe version)
SJ	Philippines (Europe version)
SJ2	Philippines (U. S. A. version)
SM	Kuwait, Qatar, Oman, UAE, Malta, Bahrain
SMT	Nigeria, Yemen, Kenya

SELECTION CODE	COUNTRIES
K	Korea

SELECTION CODE	COUNTRIES
RA1	Morocco, Algeria, Tunisia, West Africa
RA2	Chile, Uruguay, Peru, Argentina, Paraguay
RA5	Sri Lanka

SELECTION CODE	COUNTRIES
RB3	Indonesia
RB4	
RB5	Cyprus
RB6	Panama
RB7	Barbados
RB8	Malaysia (U. S. A. version)

SELECTION CODE	COUNTRIES
RC1	Malaysia (Europe version)
RC2	Singapore
RC5	Dominican Republic, Ecuador

1 Exteriors

NO.	PARTS CODE	PRICE RANK	NEW MARK	PART RANK	DESCRIPTION
1	CCŌVB7037BH01	AZ	N	D	Printer cover unit (Include №2~5)
2	GDAi-6665BHZZ	AF	N	D	Badge stand
3	HBDGD6888BHZZ	AE	N	D	Model badge
4	XWHSD40-08100	AA		C	Washer (4M)
5	XUBSD30P12000	AA		C	Screw (3×12)
6	XBPSD30P06KS0	AA		C	Screw (3×6KS)
7	TLABJ1083CCNK	AA		D	SUK label (MADE IN KOREA) [KB]
	TLABH6909BHZZ	AD	N	D	Drip label [KA]
8	GCŌVB7033BHZZ	AV	N	D	Proof cover
9	LBNDJ2003SCZZ	AA		C	Band,wire (large)(CV-100)
10	GCABB7084BHZZ	AQ	N	D	Pop-up cabinet
11	CPWBF7181BH01	BN	N	E	Pop-up PWB unit
12	PFiLW6889BHZZ	AS	N	D	Pop-up filter
13	LHLDW6812BHZZ	AC	N	C	Holder
14	XUBSD30P08000	AA		C	Screw (3×8)
15	GCABB7078BHZZ	BH	N	D	Top cabinet
16	TCAUS6677BHZZ	AD	N	D	Caution label
17	XBBSC30P08000	AA		C	Screw (3×8)
18	GCŌVB7046BHZZ	AZ	N	D	Mode sw cover
19	HDECP6826BHZZ	AP	N	D	Deco.panel
20	GCŌVH7034BHZZ	AE	N	D	Battery cover
21	GFTAB6754BHZZ	AF	N	D	Lid of clerk
22	XHPSD30P08000	AA		C	Screw (3×8)
23	XBPSD30P10KS0	AB		C	Screw (3×10KS)
24	PCUSG1220CCZZ	AB		D	Printer cushion
25	Ki-ŌB6742RCZZ	BX		E	Printer (UCR802A)
26	LX-BZ6769RCZZ	AB		C	Screw (M3×10)
27	PSTM-6658RC01	AR		C	Stamp (YOUR RECIPT THANK YOU)
28	XUBSD30P12000	AA		C	Screw (3×12)
29	QCNW-7000RC25	AD		C	GND wire
30	XJPSD30P16X00	AA	N	C	Screw (3×16X)
⚠ 31	RTRNP6851BHZZ	BE	N	B	Power transformer
32	GCŌVH7035BHZZ	AS	N	D	Trans cover
33	XBPBZ40P08K00	AA		C	Screw (4×8K)
34	LX-BZ6755RCZZ	AA		C	Screw (M3×25)
35	XNESD30-24000	AA		C	Nut (3NS)
36	QCNW-7451BHZZ	AG	N	C	Trans cable (2pin)
⚠	QACCL7421QCZZ	AS		B	AC cord (7.5A) [KA]
⚠ 37	QCNW-7212RCZZ	AH		B	BS ordiary cable [KB]
⚠	QPLGA0006QCZZ	AQ		C	Plug (3A 250V) [KB]
38	LHLDW6802RCZZ	AB		C	Disply holder
39	CPWBF9550BH01	CG	N	E	Main PWB unit
40	LANGK7410BHZZ	AM	N	C	PWB angle
41	PRDAF1032BHZZ	AM	N	C	Heat sink
42	QTANP1143CCZZ	AB		C	Earth terminal (AC 3pin)
43	LX-BZ6778BHZZ	AA	N	C	Screw
44	XHBSD30P08000	AA		C	Screw (3×8)
501	DUNTK1970BH01	BF	N	E	Power unit (Include №31,32)

1 Exteriors

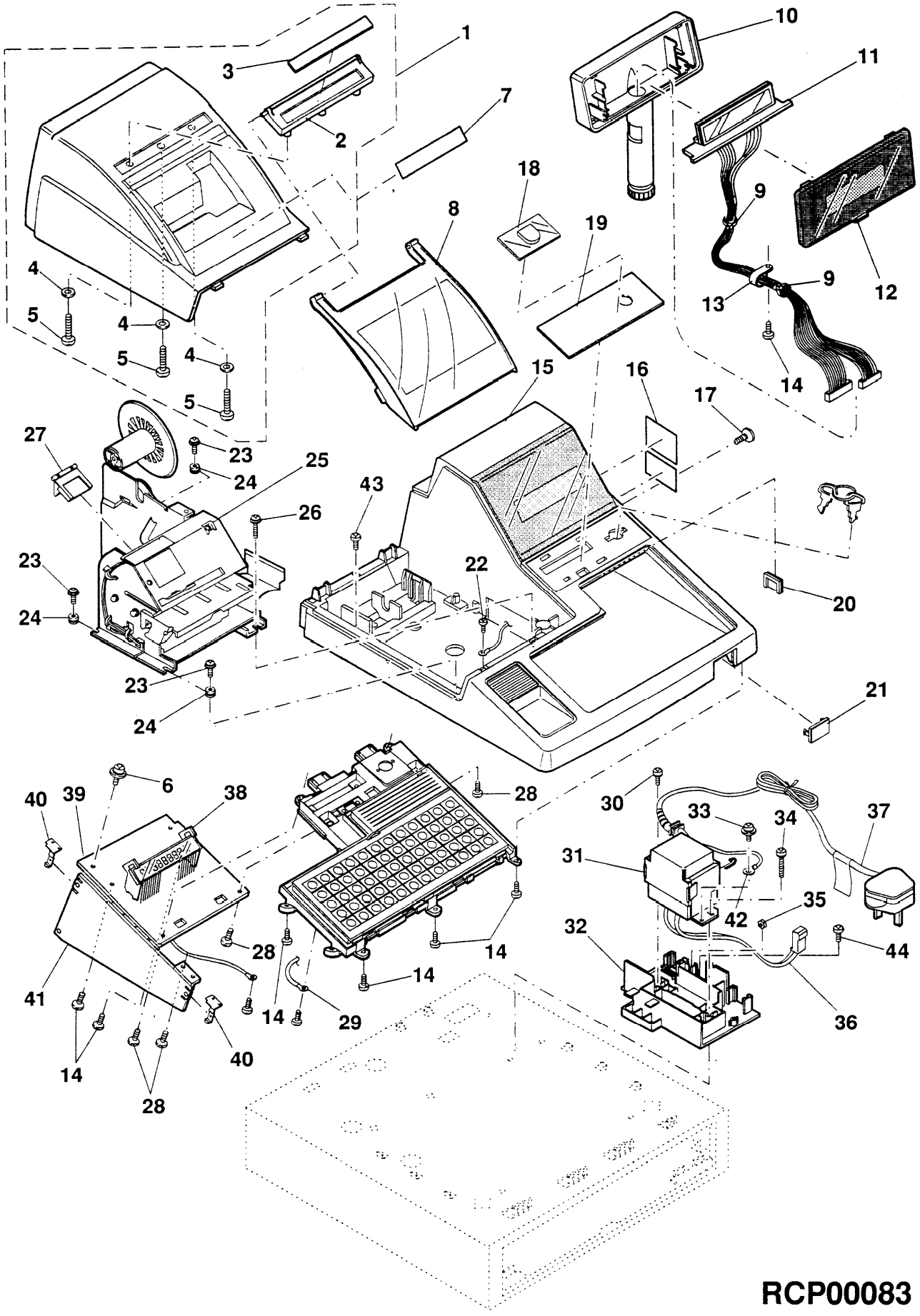

RCP00083

2 Keyboard unit

NO.	PARTS CODE	PRICE RANK	NEW MARK	PART RANK	DESCRIPTION
1	GCOVB7032BHZZ	AN	N	D	Key cover
2	TLABH6907BHZZ	AP	N	D	Key label
3	PSHEP6768BHZZ	BB	N	C	Key sheet
4	XUPSD30P06000	AA		C	Screw (3×6)
5	LFRM-6681BHZZ	AY	N	D	Key frame
6	PGUMM6694BHZZ	BF	N	C	Key rubber
7	CSHEP6769BH01	AZ	N	C	Key sheet unit
8	LPLTM6670BHZZ	AV	N	C	Key plate
9	XUPSD30P08000	AA		C	Screw (3×8)
10	0DUBODY000002	AP		B	Mode switch (body)
11	CPWBF9551BH01	AX	N	E	Key I/F PWB unit
12	XUBSD30P08000	AA		C	Screw (3×8)
13	QCNW-7431RCZZ	AF		C	Key cable (22pin)
14	LKGiM7111RCZZ	AG		B	Mode switch key (OP)
	LKGiM7129RCZZ	AG		B	Mode switch key (SM)
	LKGiM7110RCZZ	AG		B	Mode switch key (MA)
501	DUNTK1273BHZZ	BP	N	E	Keyboard unit (Include No.5~8)

3 Packing material & Accessories

NO.	PARTS CODE	PRICE RANK	NEW MARK	PART RANK	DESCRIPTION
1	SPAKC7981BHZZ	BA	N	D	Packing case
2	SPAKA7837BHZZ	AX	N	D	Packing add-L
3	PSHEP6681BHZZ	AF	N	D	Packing sheet
4	SPAKA7836BHZZ	AX	N	D	Packing add-R
5	LKGiM7331BHZZ	AE	N	B	Lock key (1PC)
6	LKGiM7111RCZZ	AG		B	Mode switch key (OP)
	LKGiM7129RCZZ	AG		B	Mode switch key (SM)
	LKGiM7110RCZZ	AG		B	Mode switch key (MA)
7	SSAKH3012CCZZ	AA		D	Vinyl bag (80×120mm)
8	TGANE1001BHZZ	AG	N	D	Guaranty [KA]
9	TCADZ2001BHZZ	AM	N	D	Card [KA]
10	TiNSE7232BHZZ	AS	N	D	Instruction book
11	UiNK-1001CCZZ	AK		S	Ink (5cc)
12	SSAKH3015CCZZ	AA		D	Vinyl bag
13	SSAKA5004CCZZ	AA		D	Vinyl bag (100×300mm)
14	TCAUS0002BHZZ	AD	N	D	Caution label(inportant label) [KB]
15	TCADH6788BHZZ	AC	N	D	Caution card
101	UBNDA1008CCZZ	AC		C	AC cord band

2 Keyboard unit

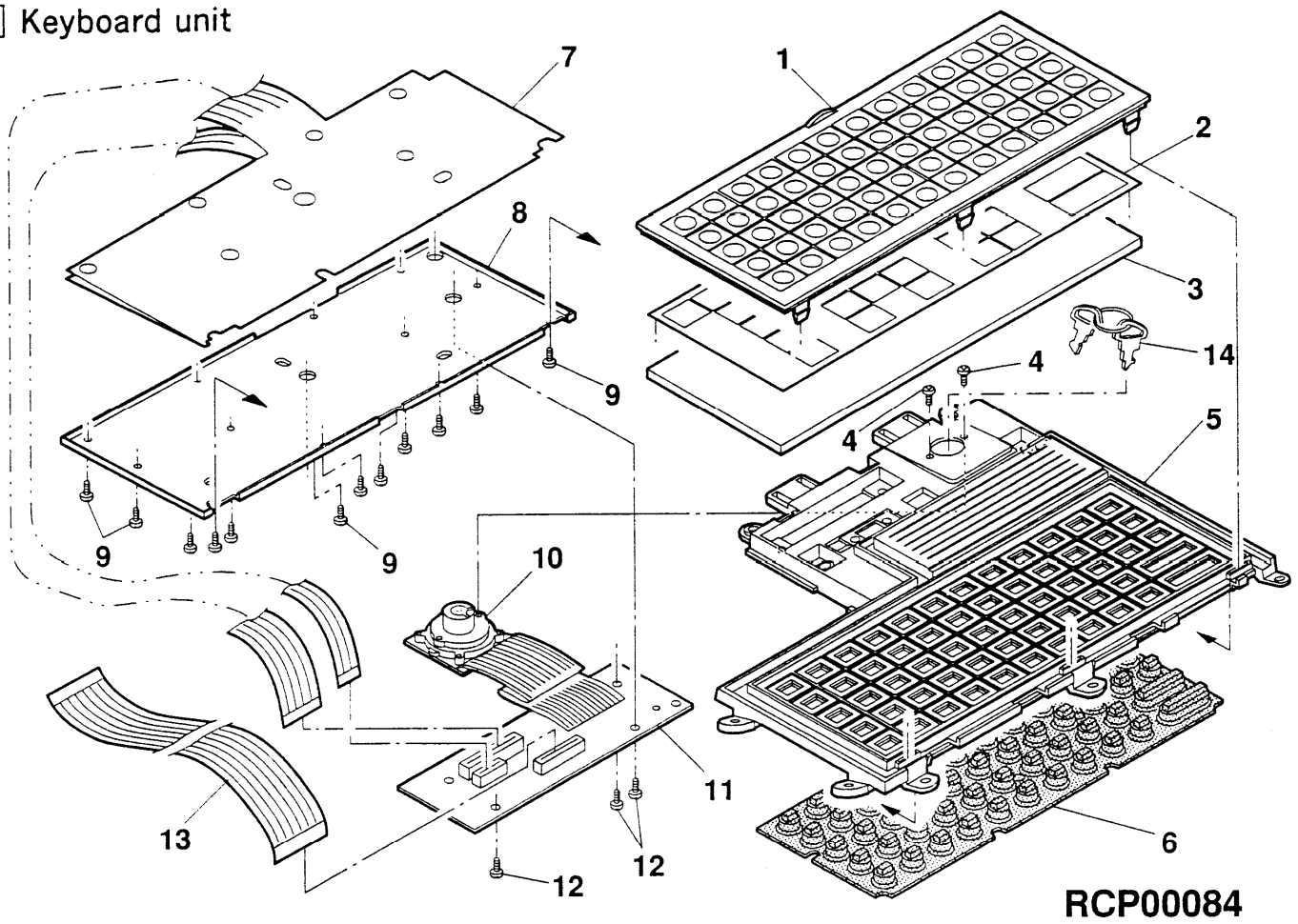

3 Packing material & Accessories

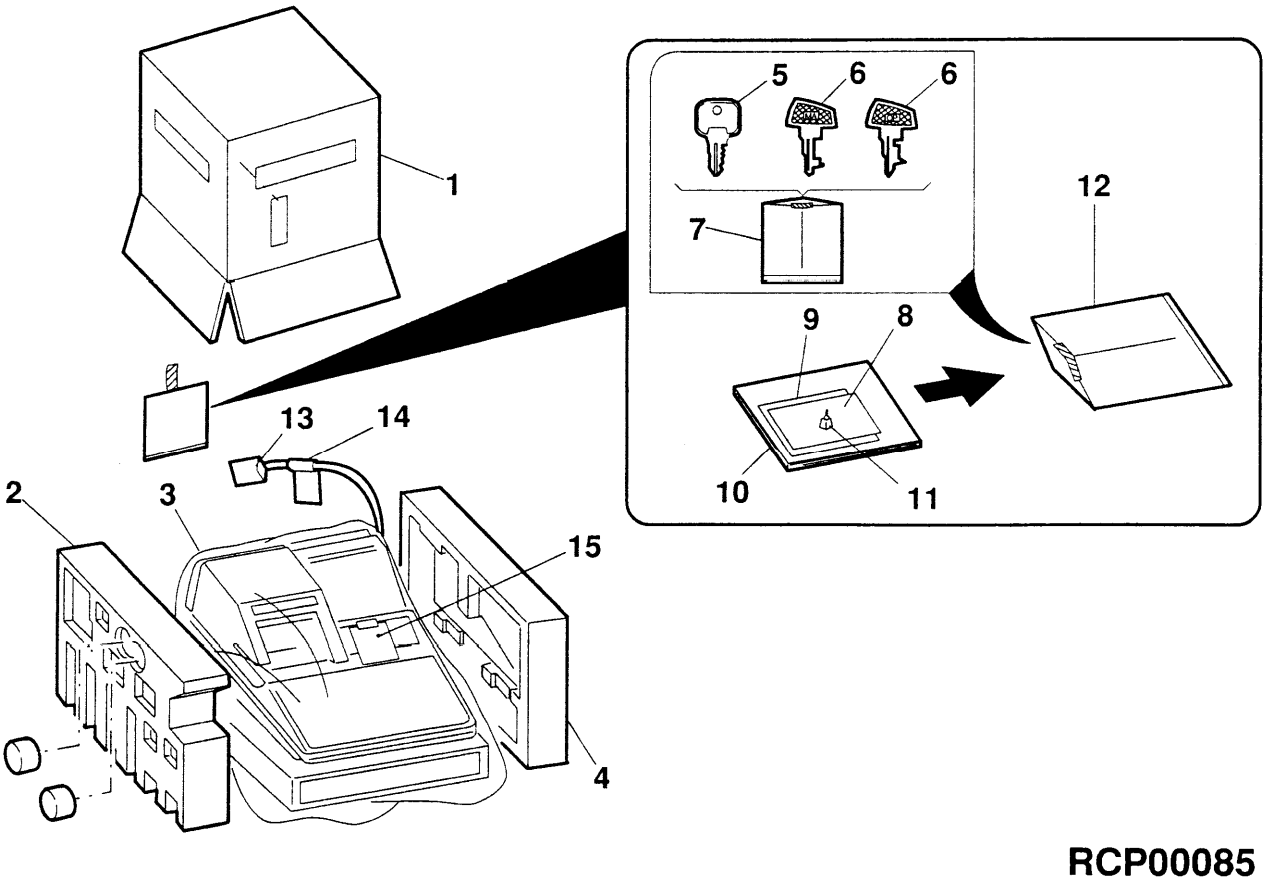

4 Drawer box unit (SK423 type)

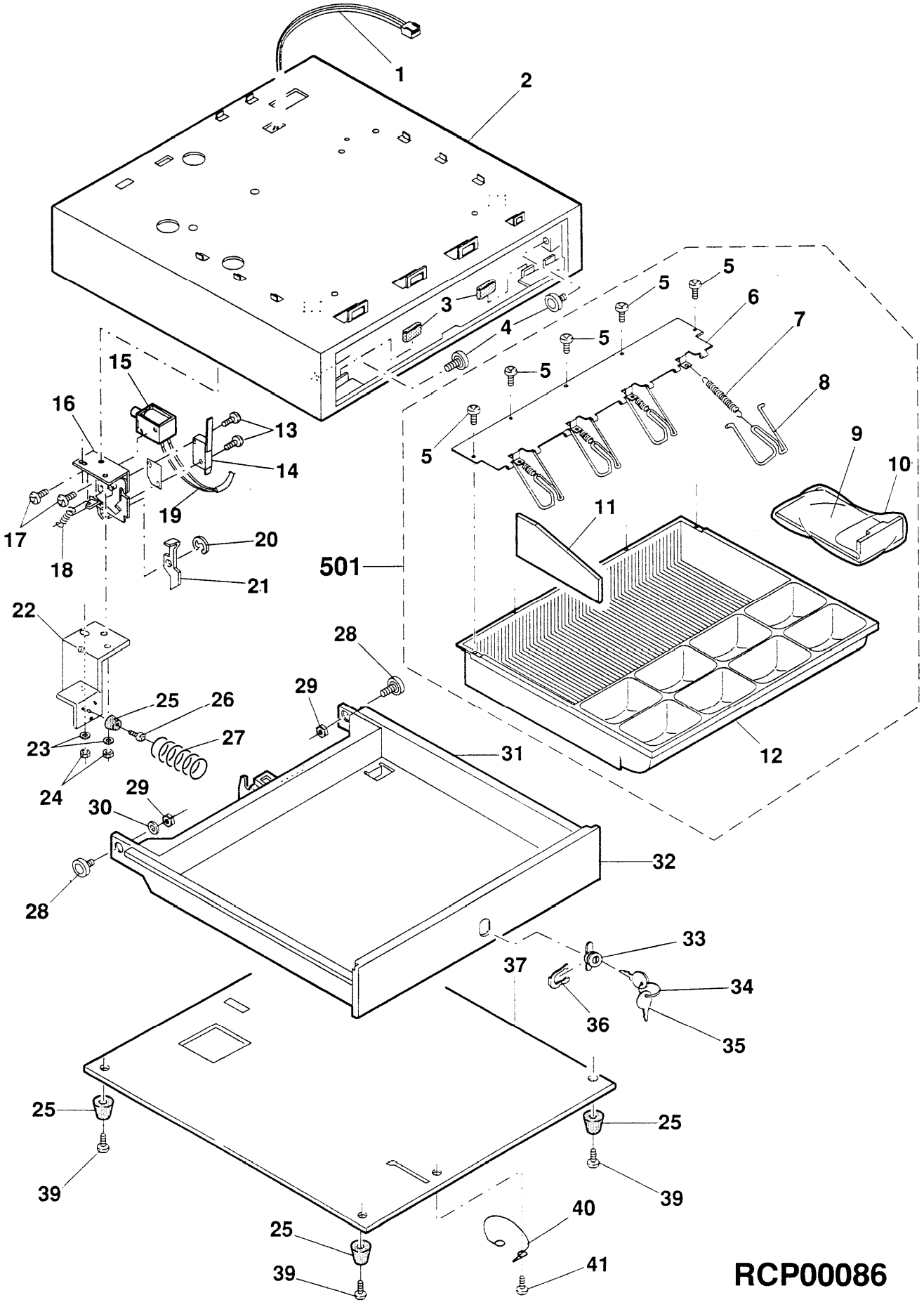

4 Drawer box unit (SK423 type)

NO.	PARTS CODE	PRICE RANK	NEW MARK	PART RANK	DESCRIPTION
1	QCNW-7556BHZZ	AL	N	C	Connector with wire
2	CCABM7139BH01	BR	N	D	Cabinet unit
3	PGUMM6695BHZZ	AE	N	D	Stopper gum
4	NRŌLP6650BHZZ	AP	N	C	Roller
5	XUPSD30P08000	AA		C	Screw (3×8)
6	LBRC-6663BHZZ	AQ	N	C	Bill bracket
7	MSPRT6714BHZZ	AE	N	C	Bill spring
8	MLEVF6695BHZZ	AK	N	C	Bill lever
9	PSKR-6629BHZZ	AL	N	C	Bill separator
10	SSAKA5004CCZZ	AA		D	Vinyl bag (100×300mm)
11	PSKR-6628BHZZ	AG	N	C	Separator
12	GCAS-6678BHZZ	BC	N	D	Money case
13	LX-BZ6776BHZZ	AA	N	C	Screw
14	QSW-M6872BHZZ	AR	N	B	Micro switch
15	RPLU-6637BHZZ	AZ	N	B	Plunger
16	CFRM-6683BH01	AW	N	C	Look frame unit
17	LX-BZ6775BHZZ	AA	N	C	Screw
18	MSPRT6713BHZZ	AD	N	C	Open lever spring
19	QCNW-7576BHZZ	AB	N	C	Wire
20	XRESJ50-06000	AA		C	E type ring (5mm)
21	MCAMM6633BHZZ	AG	N	C	Lock cam
22	LFRM-6682BHZZ	AN	N	C	Bell frame
23	XWSSD40-10000	AA		C	Washer (4mm)
24	XNESD40-32000	AA		C	Nut (M4)
25	PGUMM6696BHZZ	AE	N	D	Gum leg
26	XHBSD30P12000	AA		C	Screw (3×12)
27	MSPRC6712BHZZ	AF	N	C	Push out spring
28	NRŌLP6650BHZZ	AP	N	C	Roller
29	XNESD60-50000	AA		C	Nut (M6)
30	XWSSD60-15000	AA		C	Washer (6mm)
31	CCAS-6677BH01	BC	N	D	Case unit
32	GCŌVA7036BHZZ	AS	N	D	Front cover
33	LKGiW7330BHZZ	AY	N	B	Lock key(body)
34	PRNGT6637BHZZ	AA	N	C	Key ring
35	LKGiM7331BHZZ	AE	N	B	Lock key (1PC)
36	MSPRK6718BHZZ	AF	N	C	Lock key spring
37	LPLTM6674BHZZ	AZ	N	D	Bottom plate
39	XHBSD40P15000	AA	N	C	Screw (4×15)
40	MSPRB6711BHZZ	AD	N	C	Earth spring
41	XHPSC30P08000			C	Screw (3×8)
501	CCAS-6678BH01	BK	N	D	Money case unit (4B/8C)
502	GDRW-6678BHZZ	BF	N	D	Drawer case unit (Include No.28~30,32)
	(Unit)				
901	GBŌXD7098BHZZ	CA	N	E	Drawer box unit

5 Main PWB unit

NO.	PARTS CODE	PRICE RANK	NEW MARK	PART RANK	DESCRIPTION
1	LANGK7410BHZZ	AG	N	C	PWB angle
2	LX-BZ6644BHZZ	AA	N	C	Screw (M3.5+8S)
3	PRDAF1032BHZZ	AL	N	C	Heat sink
4	QCNCM1101BHZZ	AC	N	C	Connector (5273-2) [CN1]
5	QCNCM6865BH0i	AD	N	C	Connector (5267-9A) [CN5]
6	QCNCM6865BH1A	AE	N	C	Connector (5267-11A) [CN4]
7	QCNCM6969RC0H	AD		C	Connector (8pin)
8	QCNCM6969RC1J	AD		C	Connector (10pin)
9	QCNCM7057BHZZ	AB	N	C	Connector (5045-3) [CN7]
10	QCNCW5111BH2B	AM	N	C	Connector (52045-22) [CN6]
11	QCNCW6854RC3A	AH		C	Connector (31pin) [CN2]
12	QCNW-7554BHZZ	AD	N	C	GND wire(Main-key)
⚠ 13	QFS-C1035CCZZ	AE		A	Fuse (1.6A/250V)
14	QFSHD5002CHZZ	AB		C	Fuse holder
15	RALMB6646BHZZ	AQ	N	B	Buzzer
16	RC-EZB478RC1W	AK		C	Capacitor (45WV 4700μF) [C1]
17	RC0RF6671BHZZ	AH	N	C	Bead core (BFS3550A) [B1~6]
18	RCRM-1011CCZZ	AD		B	Oscillator (4.19MHz) [X2]
19	RCRSP1003CCZZ	AT		B	Crystal (32KHz) [X1]
20	RMPTC4472QCJB	AB		B	Block resistor (4.7KΩ×4 1/8W ±5%) [RA1]
21	RMPTC6562QCJB	AB		B	Block resistor (5.6KΩ×6 1/8W ±5%) [RA2]
⚠ 22	RTRNH6838RCZZ	AE		B	Converter transformer
23	UBATN6639BHZZ	BC	N	B	Battery (170MAH 3.6V)
24	VCCCPU1HH220J	AA		C	Capacitor (50WV 22PF) [C26]
25	VCCCPU1HH300J	AA		C	Capacitor (50WV 30PF) [C28,29]
26	VCCCPU1HH330J	AB		C	Capacitor (50WV 33pF) [C25]
27	VCEAGA1CW106M	AA		C	Capacitor (16WV 10μF) [C4,14,20]
28	VCEAGA1CW336M	AA		C	Capacitor (16WV 33μF) [C32]

5 Main PWB unit

NO.	PARTS CODE	PRICE RANK	NEW MARK	PART RANK	DESCRIPTION	
29	VCEAGA1CW337M	AB		C	Capacitor (16WV 330μF)	[C9]
30	VCEAGA1HW106M	AA		C	Capacitor (50WV 10μF)	[C34]
31	VCEAGA1HW107M	AA		C	Capacitor (50WV 100μF)	[C8]
32	VCEAGA1HW226M	AB		C	Capacitor (50WV 22μF)	[C5]
33	VCEAGA1HW335M	AB		C	Capacitor (50WV 3.3μF)	[C2,10,11,15,31]
34	VCEAGA1HW474M	AB		C	Capacitor (50WV 0.47μF)	[C12]
35	VCKYPU1HB222K	AA		C	Capacitor (50WV 2200PF)	[C6]
36	VCKYPU1HB682K	AA		C	Capacitor (50WV 6800pF)	[C27]
37	VCKYPU1HB102K	AA		C	Capacitor (50WV 1000PF)	[C33,35,37,38]
38	VCKYPU1HB221K	AB		C	Capacitor (50WV 220PF)	[C7]
39	VCKYPU1HB331K	AA		C	Capacitor (50WV 330PF)	[C21,22]
40	VCQYNA1HM333K	AA		C	Capacitor (50WV 0.033μF)	[C3]
41	VCTYPU1EX104M	AB		C	Capacitor (12WV 0.1μF)	[C13,16,17,18,19,23,30]
42	VHDDSS133HV−1	AA		B	Diode (DSS133HV)	[D2,10,13~18,20~22]
43	VHDEU1Z////−1	AB		B	Diode (EU1Z)	[D5]
44	VHD1D4B42//−1	AD		B	Diode (1D4B42)	[BD1]
45	VHD1N4002G/−1	AA		B	Diode (1N4002G)	[D1,3,6,7,9]
46	VHD1SS41B//−1	AB		B	Diode (1SS41B)	[D4]
47	VHEMTZ15A//−1	AB	N	B	Zener diode (MTZ15A)	[ZD6]
48	VHEMTZ20D//−1	AA		B	Zener diode (MTZ20D)	[ZD1]
49	VHEMTZ4.3B/−1	AA		B	Zener diode (MTZ4.3B)	[ZD2]
50	VHEMTZ9.1C/−1	AA		B	Zener diode (MTZ9.1C)	[ZD4]
51	VHERD24EL4/−1	AB		B	Zener diode (RD24EL4)	[ZD3]
52	VHERD4.3EL2−1	AB		B	Zener diode (RD4.3EL2)	[ZD5]
53	VHiG74HC373−1	AP	N	B	IC (74HC373)	[IC3]
54	VHiG76C256L10	BG	N	B	IC (G76C256L10)	[IC2]
55	VHiKiD65003AP	AE		B	IC (KID65003)	[IC6~9]
56	VHiTC4094BP−1	AM		B	IC (TC4094BP)	[IC4,5]
57	VHiU75P21802	AZ	N	B	IC (U75P21802)	[IC1]
58	VRD−RC2EY101J	AA		C	Resistor (1/4W 100Ω ±5%)	[R2,5]
59	VRD−RC2EY102J	AA		C	Resistor (1/4W 1.0KΩ ±5%)	[R26,28,30]
60	VRD−RC2EY123J	AA		C	Resistor (1/4W 12KΩ ±5%)	[R1]
61	VRD−RC2EY152J	AA		C	Resistor (1/4W 1.5KΩ ±5%)	[R27]
62	VRD−RC2EY153J	AA		C	Resistor (1/4W 15KΩ ±5%)	[R24]
63	VRD−RC2EY221J	AA		C	Resistor (1/4W 220Ω ±5%)	[R29]
64	VRD−RC2EY222J	AA		C	Resistor (1/4W 2.2KΩ ±5%)	[R8]
65	VRD−RC2EY223J	AA		C	Resistor (1/4W 22KΩ ±5%)	[R9,18,19]
66	VRD−RC2EY272J	AA		C	Resistor (1/4W 2.7KΩ ±5%)	[R6,12,13]
67	VRD−RC2EY331J	AA		C	Resistor (1/4W 330Ω ±5%)	[R31]
68	VRD−RC2EY392J	AA		C	Resistor (1/4W 3.9KΩ ±5%)	[R4]
69	VRD−RC2EY471J	AA		C	Resistor (1/4W 470Ω ±5%)	[R7]
70	VRD−RC2EY472J	AA		C	Resistor (1/4W 4.7KΩ ±5%)	[R3,16,17,20,22,32,34,35]
71	VRD−RC2EY562J	AA		C	Resistor (1/4W 5.6KΩ ±5%)	[R25]
72	VRD−RC2EY563J	AA		C	Resistor (1/4W 56KΩ ±5%)	[R23]
73	VRS−RE3DA221J	AB		C	Resistor (2W 220Ω ±5%)	[R10,11]
74	VSKSB601−//−1	AN	N	B	Transistor (2SB1005)(KSB601)	[Q3]
75	VS2SB926−S/TC	AD		B	Transistor (2SB926−S)	[Q4,6,7]
76	VS2SC3198−/−1	AL	N	B	Transistor (JC501)(2SC3198)	[Q9]
77	VS2SC3784−/−1	AD		B	Transistor (2SC3784)	[Q8]
78	VS2SC4153−/−1	AG		B	Transistor (2SC4153)	[Q5]
79	VS2SD1769−/−1	AE		B	Transistor (2SD1195)	[Q1]
80	VVK9MT98GY/−1	AW		B	Display tube	
81	XBPSD30P04000	AA		C	Screw (3×4)	
82	XBPSD30P06KS0	AA		C	Screw (3×6KS)	
83	VCKYPU1HB332K	AA		C	Capacitor (50WV 3300pF)	[C39]
	(Unit)					
901	CPWBF9550BH01	CG	N	E	Main PWB unit	

6 Key I/F PWB unit

NO.	PARTS CODE	PRICE RANK	NEW MARK	PART RANK	DESCRIPTION	
1	QCNCW5111BH2B	AM	N	C	Connector (52045−22)	[CN1]
2	QCNCW7058BH0E	AG	N	C	Connector (5229−6 CPB)	[CN2]
3	QCNCW7058BH1D	AL	N	C	Connector (5229−14 CPB)	[CN3]
4	QCNW−7555BHZZ	AG	N	C	Mode cable	
5	RCORF6675BHZZ	AC	N	C	Core (BFS3550R2F)	[B1~6]
6	VHDDSS133HV−1	AA		B	Diode (DSS133HV)	[D1~4,6~16]
	(Unit)					
901	CPWBF9551BH01	AX	N	E	Key I/F PWB unit	

7 Pop-up PWB unit

NO.	PARTS CODE	PRICE RANK	NEW MARK	PART RANK	DESCRIPTION
1	QCNCW6918BH09	AP	N	C	Connector (9pin)
2	QCNCW6918BH11	AR	N	C	Connector (11pin)
3	VVK9MT98G//-1	AW		B	Display tube
	(Unit)				
901	CPWBF7181BH01	BN	N	E	Pop-up PWB unit

8 Articles for consumption

NO.	PARTS CODE	PRICE RANK	NEW MARK	PART RANK	DESCRIPTION
1	UiNK-1001CCZZ	AK		S	Ink (5cc)
2	NRŌLR6638RCZZ	AY		S	Ink roller (purple)
3	DPAPR1006CSZZ	AK		S	Roll paper (5rolls/1pack)

9 AC CORD

NO.	PARTS CODE	PRICE RANK	NEW MARK	PART RANK	DESCRIPTION
⚠ 1	QACCJ1413QCZZ	AG		B	AC cord Japan, RB6, RB7, RC5, SC, SD
⚠	QACCA3441QCZZ	AL		B	AC cord SB
⚠ 2	QACCD8411QCZZ	AN		B	AC cord U. S. A. Canada, Japan (Okinawa), Guam
⚠ 3	QACCE1422QCZZ	AP		B	AC cord RA1, RA2, RB3, RB5, SG, TQ, TR, TS, K AC cord Yugoslavia
⚠ 4	QPLGA4501CCZZ	AK		B	Plug SE
⚠	QCNW-6629RCZZ	AN		B	AC cord SE
⚠ 5	QPLGA0018WRE0	AN		B	Plug SH, RA5
⚠	QCNW-6629RCZZ	AN		B	AC cord SH, RA5, SHE
⚠	PHOG-1023CCZZ	AB		B	Bushing for AC cord SH, RA5, SHE
⚠ 6	QACCL7421QCZZ	AS		B	AC cord KA, SL
7	QTANP0004HCZZ	AB		B	Lug terminal RC2, SM, SMT, RC1, SBA, RB8
	QPLGA0006QCZZ	AN		B	Plug KB, SM, SMT, RC1, SBA, RB8, RC2
	QCNW-7212RCZZ	AH		B	AC cord KB, RC1, RC2, SM, SMT, SBA
⚠	QCNW-6629RCZZ	AN		B	AC cord RB8
⚠ 8	QCNW-6629RCZZ	AN		B	AC cord RB4 (AC cord only. The plug is not included.)
⚠ 9	QACCZ3423QCZZ	AH		B	AC cord SJ, SJ2

Note : Instead of AC cords QACCZ3421QCZZ/QACCK1008CCZZ, the AC cord QACCE1422QCZZ(No.3) is supllied as service spare part.

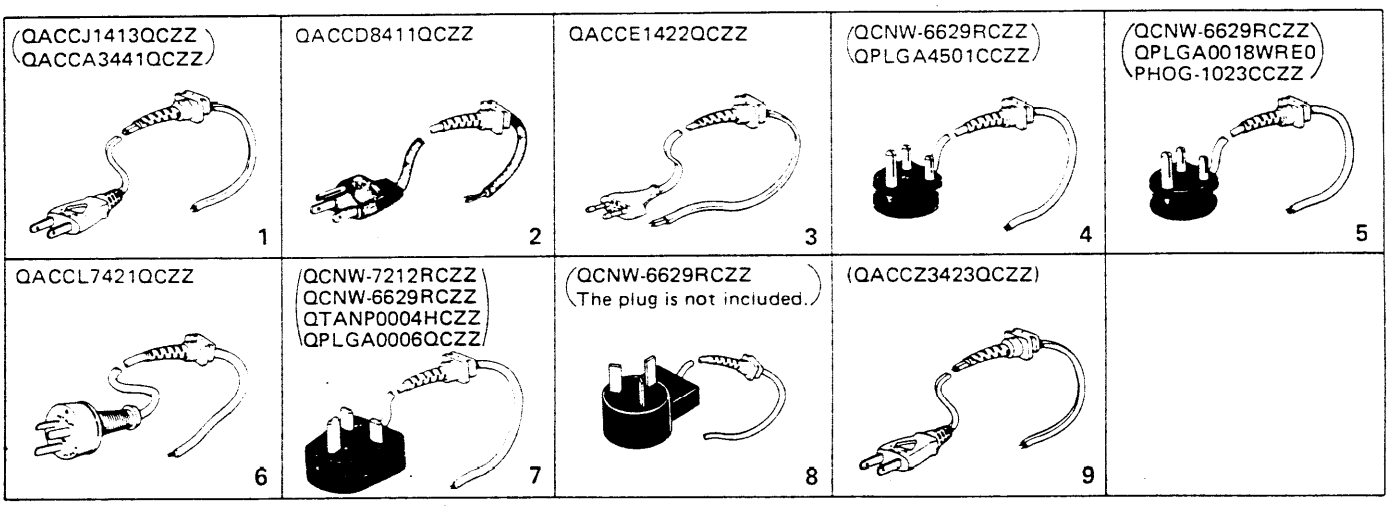

Table of destinations

SELECTION CODE	COUNTRIES
U	U. S. A., Guam
A	Canada
TS	Germany
TQ	SEEG territory other than Germany (Stamp : English)
TR	SEEG territory other than Germany (Stamp : Spanish)
KB	U. Kingdom
KA	Australia

SELECTION CODE	COUNTRIES
K	Korea

SELECTION CODE	COUNTRIES
SB	Saudi Arabia (127V area)
SBA	Saudi Arabia (220V area)
SC	Taiwan
SD	Venezuela
SE	Hong Kong
SG	Lebanon, Syria, Greece, Pakistan, Iran, Egypt, Thailand, Iraq, Mauritius, Seychelles, Tahiti, Jordan, Sudan, Turkey
SH	South Africa (U. S. A. version)
SHE	South Africa (Europe version)
SJ	Philippines (Europe version)
SJ2	Philippines (U. S. A. version)
SM	Kuwait, Qatar, Oman, UAE, Malta, Bahrain
SMT	Nigeria, Yemen, Kenya

SELECTION CODE	COUNTRIES
RA1	Morocco, Algeria, Tunisia, West Africa
RA2	Chile, Uruguay, Peru, Argentina, Paraguay
RA5	Sri Lanka

SELECTION CODE	COUNTRIES
RB3	Indonesia
RB4	
RB5	Cyprus
RB6	Panama
RB7	Barbados
RB8	Malaysia (U. S. A. version)

SELECTION CODE	COUNTRIES
RC1	Malaysia (Europe version)
RC2	Singapore
RC5	Dominican Republic, Ecuador

■ Index

PARTS CODE	NO.	PRICE RANK	NEW MARK	PART RANK	
〔C〕					
CCABM7139BH01	4- 2	BR	N	D	
CCAS-6677BH01	4- 31	BC	N	D	
CCAS-6678BH01	4- 501	BK	N	D	
CCŌVB7037BH01	1- 1	AZ	N	D	
CFRM-6683BH01	4- 16	AW	N	C	
CPWBF7181BH01	1- 11	BN	N	E	
〃	7- 901	BN	N	E	
CPWBF9550BH01	1- 39	CG	N	E	
〃	5- 901	CG	N	E	
CPWBF9551BH01	2- 11	AX	N	E	
〃	6- 901	AX	N	E	
CSHEP6769BH01	2- 7	AZ	N	C	
〔D〕					
DPAPR1006CSZZ	8- 3	AK		S	
DUNTK1273BHZZ	2- 501	BP	N	E	
DUNTK1970BH01	1- 501	BF	N	E	
〔G〕					
GBŌXD7098BHZZ	4- 901	CA	N	E	
GCABB7078BHZZ	1- 15	BH	N	D	
GCABB7084BHZZ	1- 10	AQ	N	D	
GCAS-6678BHZZ	4- 12	BC	N	D	
GCŌVA7036BHZZ	4- 32	AS	N	D	
GCŌVB7032BHZZ	2- 1	AN	N	D	
GCŌVB7033BHZZ	1- 8	AV	N	D	
GCŌVB7046BHZZ	1- 18	AZ	N	D	
GCŌVH7034BHZZ	1- 20	AE	N	D	
GCŌVH7035BHZZ	1- 32	AS	N	D	
GDAi-6665BHZZ	1- 2	AF	N	D	
GDRW-6678BHZZ	4- 502	BF	N	D	
GFTAB6754BHZZ	1- 21	AF	N	D	
〔H〕					
HBDGD6888BHZZ	1- 3	AE	N	D	
HDECP6826BHZZ	1- 19	AP	N	D	
〔K〕					
Ki-ŌB6742RCZZ	1- 25	BX		E	
〔L〕					
LANGK7410BHZZ	1- 40	AM	N	C	
〃	5- 1	AG	N	C	
LBNDJ2003SCZZ	1- 9	AA		C	
LBRC-6663BHZZ	4- 6	AQ	N	C	
LFRM-6681BHZZ	2- 5	AY	N	D	
LFRM-6682BHZZ	4- 22	AN	N	C	
LHLDW6802RCZZ	1- 38	AB		C	
LHLDW6812BHZZ	1- 13	AC	N	C	
LKGiM7110RCZZ	2- 14	AG		B	
〃	3- 6	AG		B	
LKGiM7111RCZZ	2- 14	AG		B	
〃	3- 6	AG		B	
LKGiM7129RCZZ	2- 14	AG		B	
〃	3- 6	AG		B	
LKGiM7331BHZZ	3- 5	AE	N	B	
〃	4- 35	AE	N	B	
LKGiW7330BHZZ	4- 33	AY	N	B	
LPLTM6670BHZZ	2- 8	AV	N	C	
LPLTM6674BHZZ	4- 37	AZ	N	D	
LX-BZ6644BHZZ	5- 2	AA	N	C	
LX-BZ6755RCZZ	1- 34	AA		C	
LX-BZ6769RCZZ	1- 26	AB		C	
LX-BZ6775BHZZ	4- 17	AA	N	C	
LX-BZ6776BHZZ	4- 13	AA	N	C	
LX-BZ6778BHZZ	1- 43	AA	N	C	
〔M〕					
MCAMM6633BHZZ	4- 21	AG	N	C	
MLEVF6695BHZZ	4- 8	AK	N	C	
MSPRB6711BHZZ	4- 40	AD	N	C	
MSPRC6712BHZZ	4- 27	AF	N	C	
MSPRK6718BHZZ	4- 36	AF	N	C	
MSPRT6713BHZZ	4- 18	AD	N	C	
MSPRT6714BHZZ	4- 7	AE	N	C	
〔N〕					
NRŌLP6650BHZZ	4- 4	AP	N	C	
〃	4- 28	AP	N	C	
NRŌLR6638RCZZ	8- 2	AY		S	
〔P〕					
PCUSG1220CCZZ	1- 24	AB		D	
PFiLW6889BHZZ	1- 12	AS	N	D	
PGUMM6694BHZZ	2- 6	BF	N	C	
PGUMM6695BHZZ	4- 3	AE	N	D	
PGUMM6696BHZZ	4- 25	AE	N	D	

PARTS CODE	NO.	PRICE RANK	NEW MARK	PART RANK	
PRDAF1032BHZZ	1- 41	AM	N	C	
〃	5- 3	AL	N	C	
PRNGT6637BHZZ	4- 34	AA	N	C	
PSHEP6681BHZZ	3- 3	AF	N	D	
PSHEP6768BHZZ	2- 3	BB	N	C	
PSKR-6628BHZZ	4- 11	AG	N	C	
PSKR-6629BHZZ	4- 9	AL	N	C	
PSTM-6658RC01	1- 27	AR		C	
〔Q〕					
QACCL7421QCZZ	1- 37	AS		B	
QCNCM1101BHZZ	5- 4	AC	N	C	
QCNCM6865BH0i	5- 5	AD	N	C	
QCNCM6865BH1A	5- 6	AE	N	C	
QCNCM6969RC0H	5- 7	AD		C	
QCNCM6969RC1J	5- 8	AD		C	
QCNCM7057BHZZ	5- 9	AB	N	C	
QCNCW5111BH2B	5- 10	AM	N	C	
〃	6- 1	AM	N	C	
QCNCW6854RC3A	5- 11	AH		C	
QCNCW6918BH09	7- 1	AP	N	C	
QCNCW6918BH11	7- 2	AR	N	C	
QCNCW7058BH0E	6- 2	AG	N	C	
QCNCW7058BH1D	6- 3	AL	N	C	
QCNW-7000RC25	1- 29	AD		C	
QCNW-7212RCZZ	1- 37	AH		B	
QCNW-7431RCZZ	2- 13	AF		C	
QCNW-7451BHZZ	1- 36	AG	N	C	
QCNW-7554BHZZ	5- 12	AD	N	C	
QCNW-7555BHZZ	6- 4	AG	N	C	
QCNW-7556BHZZ	4- 1	AL	N	C	
QCNW-7576BHZZ	4- 19	AB	N	C	
QFS-C1035CCZZ	5- 13	AE		A	
QFSHD5002CHZZ	5- 14	AB		C	
QPLGA0006QCZZ	1- 37	AQ		C	
QSW-M6872BHZZ	4- 14	AR	N	B	
QTANP1143CCZZ	1- 42	AB		C	
〔R〕					
RALMB6646BHZZ	5- 15	AQ	N	B	
RC-EZB478RC1W	5- 16	AK		C	
RCŌRF6675BHZZ	6- 5	AC	N	C	
RCRM-1011CCZZ	5- 18	AD		B	
RCRSP1003CCZZ	5- 19	AT		B	
RC0RF6671BHZZ	5- 17	AH	N	C	
RMPTC4472QCJB	5- 20	AB		B	
RMPTC6562QCJB	5- 21	AB		B	
RPLU-6637BHZZ	4- 15	AZ	N	B	
RTRNH6838RCZZ	5- 22	AE		B	
RTRNP6851BHZZ	1- 31	BE	N	B	
〔S〕					
SPAKA7836BHZZ	3- 4	AX	N	D	
SPAKA7837BHZZ	3- 2	AX	N	D	
SPAKC7981BHZZ	3- 1	BA	N	D	
SSAKA5004CCZZ	3- 13	AA		D	
〃	4- 10	AA		D	
SSAKH3012CCZZ	3- 7	AA		D	
SSAKH3015CCZZ	3- 12	AA		D	
〔T〕					
TCADH6788BHZZ	3- 15	AC	N	D	
TCADZ2001BHZZ	3- 9	AM	N	D	
TCAUS0002BHZZ	3- 14	AD	N	D	
TCAUS6677BHZZ	1- 16	AD	N	D	
TGANE1001BHZZ	3- 8	AG	N	D	
TiNSE7232BHZZ	3- 10	AS	N	D	
TLABH6907BHZZ	2- 2	AP	N	D	
TLABH6909BHZZ	1- 7	AD	N	D	
TLABJ1083CCNK	1- 7	AA		D	
〔U〕					
UBATN6639BHZZ	5- 23	BC	N	B	
UBNDA1008CCZZ	3- 101	AC		C	
UiNK-1001CCZZ	3- 11	AK		S	
〃	8- 1	AK		S	
〔V〕					
VCCCPU1HH220J	5- 24	AA		C	
VCCCPU1HH300J	5- 25	AA		C	
VCCCPU1HH330J	5- 26	AB		C	
VCEAGA1CW106M	5- 27	AA		C	
VCEAGA1CW336M	5- 28	AA		C	
VCEAGA1CW337M	5- 29	AB		C	
VCEAGA1HW106M	5- 30	AA		C	
VCEAGA1HW107M	5- 31	AA		C	

PARTS CODE	NO.	PRICE RANK	NEW MARK	PART RANK	
VCEAGA1HW226M	5- 32	AB		C	
VCEAGA1HW335M	5- 33	AB		C	
VCEAGA1HW474M	5- 34	AB		C	
VCKYPU1HB102K	5- 37	AA		C	
VCKYPU1HB221K	5- 38	AB		C	
VCKYPU1HB222K	5- 35	AA		C	
VCKYPU1HB331K	5- 39	AA		C	
VCKYPU1HB332K	5- 83	AA		C	
VCKYPU1HB682K	5- 36	AA		C	
VCQYNA1HM333K	5- 40	AA		C	
VCTYPU1EX104M	5- 41	AB		C	
VHDDSS133HV-1	5- 42	AA		B	
〃	6- 6	AA		B	
VHDEU1Z////-1	5- 43	AB		B	
VHD1D4B42//-1	5- 44	AD		B	
VHD1N4002G/-1	5- 45	AA		B	
VHD1SS41B//-1	5- 46	AB		B	
VHEMTZ15A//-1	5- 47	AB	N	B	
VHEMTZ20D//-1	5- 48	AA		B	
VHEMTZ4.3B/-1	5- 49	AA		B	
VHEMTZ9.1C/-1	5- 50	AA		B	
VHERD24EL4/-1	5- 51	AB		B	
VHERD4.3EL2-1	5- 52	AB		B	
VHiG74HC373-1	5- 53	AP	N	B	
VHiG76C256L10	5- 54	BG	N	B	
VHiKiD65003AP	5- 55	AE		B	
VHiTC4094BP-1	5- 56	AM		B	
VHiU75P218012	5- 57	AZ	N	B	
VRD-RC2EY101J	5- 58	AA		C	
VRD-RC2EY102J	5- 59	AA		C	
VRD-RC2EY123J	5- 60	AA		C	
VRD-RC2EY152J	5- 61	AA		C	
VRD-RC2EY153J	5- 62	AA		C	
VRD-RC2EY221J	5- 63	AA		C	
VRD-RC2EY222J	5- 64	AA		C	
VRD-RC2EY223J	5- 65	AA		C	
VRD-RC2EY272J	5- 66	AA		C	
VRD-RC2EY331J	5- 67	AA		C	
VRD-RC2EY392J	5- 68	AA		C	
VRD-RC2EY471J	5- 69	AA		C	
VRD-RC2EY472J	5- 70	AA		C	
VRD-RC2EY562J	5- 71	AA		C	
VRD-RC2EY563J	5- 72	AA		C	
VRS-RE3DA221J	5- 73	AB		C	
VSKSB601-//-1	5- 74	AN	N	B	
VS2SB926-S/TC	5- 75	AD		B	
VS2SC3198-/-1	5- 76	AL	N	B	
VS2SC3784-/-1	5- 77	AD		B	
VS2SC4153-/-1	5- 78	AG		B	
VS2SD1769-/-1	5- 79	AE		B	
VVK9MT98G//-1	7- 3	AW		B	
VVK9MT98GY/-1	5- 80	AW		B	
〔X〕					
XBBSC30P08000	1- 17	AA		C	
XBPBZ40P08K00	1- 33	AA		C	
XBPSD30P04000	5- 81	AA		C	
XBPSD30P06KS0	1- 6	AA		C	
〃	5- 82	AA		C	
XBPSD30P10KS0	1- 23	AB		C	
XHBSD30P08000	1- 44	AA		C	
XHBSD30P12000	4- 26	AA		C	
XHBSD40P15000	4- 39	AA	N	C	
XHPSC30P08000	4- 41			C	
XHPSD30P08000	1- 22	AA		C	
XJPSD30P16X00	1- 30	AA	N	C	
XNESD30-24000	1- 35	AA		C	
XNESD40-32000	4- 24	AA		C	
XNESD60-50000	4- 29	AA		C	
XRESJ50-06000	4- 20	AA		C	
XUBSD30P08000	1- 14	AA		C	
〃	2- 12	AA		C	
XUBSD30P12000	1- 5	AA		C	
〃	1- 28	AA		C	
XUPSD30P06000	2- 4	AA		C	
XUPSD30P08000	2- 9	AA		C	
〃	4- 5	AA		C	
XWHSD40-08100	1- 4	AA		C	
XWSSD40-10000	4- 23	AA		C	
XWSSD60-15000	4- 30	AA		C	
〔0〕					

PARTS CODE	NO.	PRICE RANK	NEW MARK	PART RANK	
0DUBÕDY000002	2- 10	AP		B	

SHARP

COPYRIGHT © 1992 BY SHARP CORPORATION
All rights reserved.
Printed in Japan.
No part of this publication may be reproduced,
stored in a retrieval system, or transmitted,
in any form or by any means,
electronic, mechanical, photocopying, recording, or otherwise,
without prior written permission of the publisher.

SHARP CORPORATION
Information Systems Group
Quality & Reliability Control Center
Yamatokoriyama, Nara 639-11, Japan
1992 July Printed in Japan Ⓢ