# DENON

## *Service manual*

## DRA-395 2~34

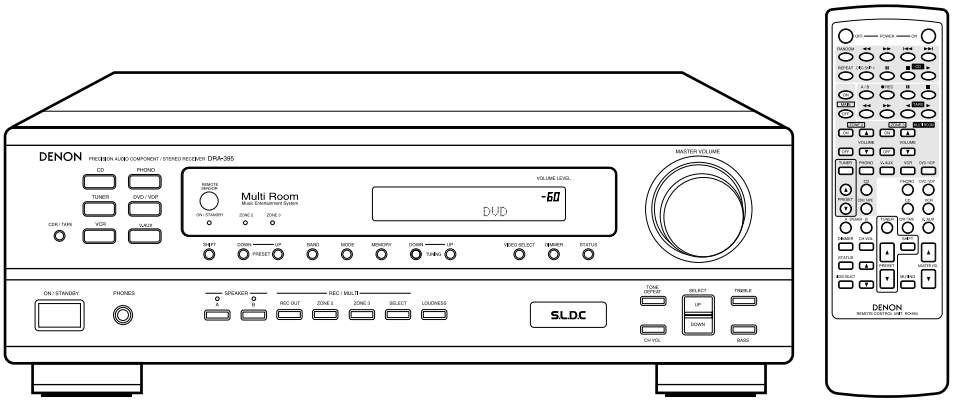


## DRA-295 36~69

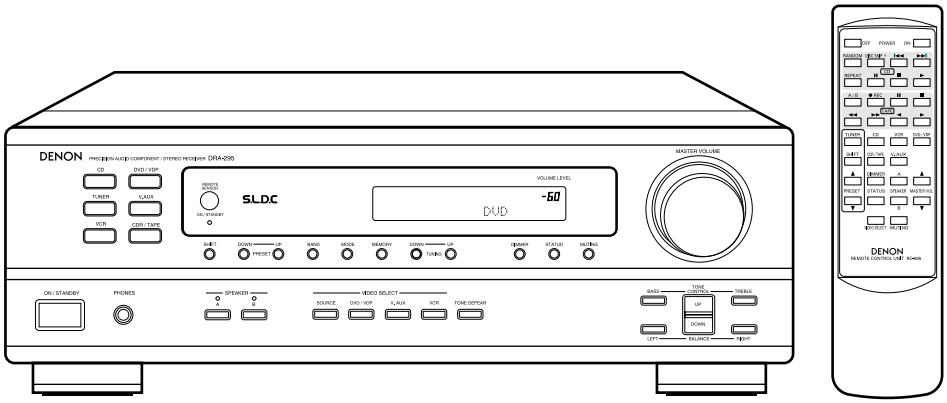

# DENON

**For U.S.A. & Canada model**

Hi-Fi AM-FM Stereo Receiver

# SERVICE MANUAL

# MODEL DRA-395

## AM-FM STEREO RECEIVER

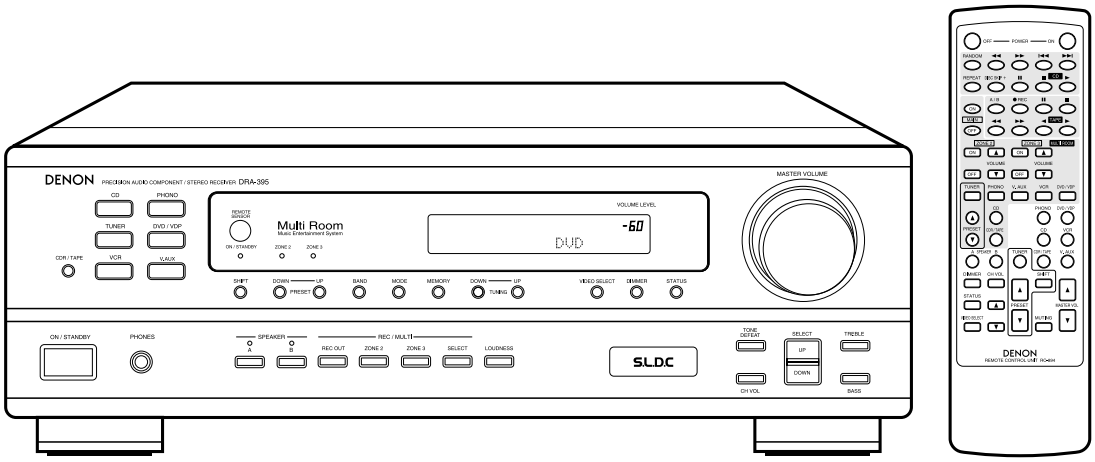

### — TABLE OF CONTENTS —


SAFETY PRECAUTIONS ..... 2
SPECIFICATIONS ..... 2
DISASSEMBLY ..... 3
ADJUSTMENT ..... 4,5
BLOCK DIAGRAM ..... 6
LEVEL DIAGRAM ..... 7
SEMICONDUCTORS ..... 8~12
PRINTED WIRING BOARDS ..... 13~17
NOTE FOR PARTS LIST ..... 18
PARTS LIST OF P.W.B. UNIT ASS'Y ..... 19~24
EXPLODED VIEW ..... 25
PARTS LIST OF EXPLODED VIEW ..... 26
PACKING VIEW ..... 27
PARTS LIST OF PACKING & ACCESSORIES ..... 27
WIRING DIAGRAM ..... 28
SCHEMATIC DIAGRAMS ..... 29~34
(1/6) INPUT UNIT ..... 29
(2/6) VOLUME UNIT ..... 30
(3/6) MAIN UNIT ..... 31
(4/6) VIDEO UNIT ..... 32
CONNECTOR UNIT ..... 32
(5/6) FRONT UNIT ..... 33
SWITCH UNIT ..... 33
POWER SW/HP UNIT ..... 33
(6/6) TUNER UNIT ..... 34


● **Some illustrations using in this service manual are slightly different from the actual set.**


**NIPPON COLUMBIA CO., LTD.**

14-14, AKASAKA 4-CHOME, MINATO-KU, TOKYO 107-8011 JAPAN
Telephone: 03 (3584) 8111

X0118 842 NC 0108

## SAFETY PRECAUTIONS

The following check should be performed for the continued protection of the customer and service technician.

## LEAKAGE CURRENT CHECK

Before returning the unit to the customer, make sure you make either (1) a leakage current check or (2) a line to chassis resistance check. If the leakage current exceeds 0.5 milliamps, or if the resistance from chassis to either side of the power cord is less than 460 kohms, the unit is defective.

## SPECIFICATIONS

- **Audio Section**

**(Power Amplifier)**

| | |
|---|---|
| **Rated output:** | 80W + 80W (8Ω/ohms, 20Hz ~ 20kHz with 0.08% T.H.D.) |
| **Output terminals:** | A or B 4 to 16Ω/ohms |
| | A + B 8 to 16Ω/ohms |

**(Analog)**

| | |
|---|---|
| **LINE input - PRE OUT** | |
| **Input sensitivity/input impedance:** | 200mV/47kΩ/kohms |
| **Frequency response:** | 10Hz ~ 50kHz: ±1.5dB |
| **S/N ratio:** | 100 dB (IHF-A weighted) |
| **Total harmonic distortion:** | 0.009% (–3dB at rated output, 8Ω/ohms) (1kHz) |
| **Rated output:** | 1.2V |
| **PHONO input - REC OUT** | |
| **Input sensitivity/input impedance:** | 2.5mV/47kΩ/kohms |
| **RIAA deviation:** | ±0.5dB (20Hz ~ 20kHz) |
| **S/N ratio:** | 74dB (IHF-A weighted, with 5mV input) |
| **Total harmonic distortion:** | 0.03% (1kHz, 3V) |
| **Rated output/Maximum output:** | 150mV/7V |

- **Video Section**

**(Standard Video Jacks)**

| | |
|---|---|
| **Input/output level and impedance:** | 1V p-p, 75Ω/ohms |
| **Frequency response:** | 5Hz ~ 10MHz +1, –3dB |

- **Tuner Section**

| | **[FM]** (note: μV at 75Ω/ohms, 0dBf = $1\times10^{-15}$W) | | **[AM]** |
|---|---|---|---|
| **Receiving range:** | 87.50MHz ~ 107.90 MHz | | 520kHz ~ 1710kHz |
| **Usable sensitivity:** | 1.4μV (14.2dBf) | | 18μV |
| **50dB quieting sensitivity:** | MONO | 2.8μV (20.2dBf) | |
| | STEREO | 23μV (38.5dBf) | |
| **S/N ratio:** | MONO | 80dB (IHF-A weighted) | |
| | STEREO | 75dB (IHF-A weighted) | |
| **Total harmonic distortion:** | MONO | 0.15% (1kHz) | |
| | STEREO | 0.3% (1kHz) | |

- **General**

| | |
|---|---|
| **Power supply:** | AC120V, 60Hz |
| **Power consumption:** | 3.39A |
| **Maximum external dimensions:** | 434 (W) × 147 (H) × 417 (D) mm (17-1/16″ × 5-25/32″ × 16-7/16″) |
| **Weight:** | 9.7kg (21lbs 6oz) |

- **Remote Control Unit (RC-894)**

| | |
|---|---|
| **Batteries:** | R03/AAA Type (two batteries) |
| **External dimensions:** | 64 (W) × 206 (H) × 19 (D) mm (2-13/64″ × 8-9/32″ × 3/4″) |
| **Weight:** | 140g (Approx. 4.9 oz) (including batteries) |

* For purposes of improvement, specifications and design are subject to change without notice.

# DISASSEMBLY

(Follow the procedure below in reverse order when reassembling)

## Top Cover

Remove 6 screws ① and 3 screws ②, detach the Top Cover in the arrow direction.

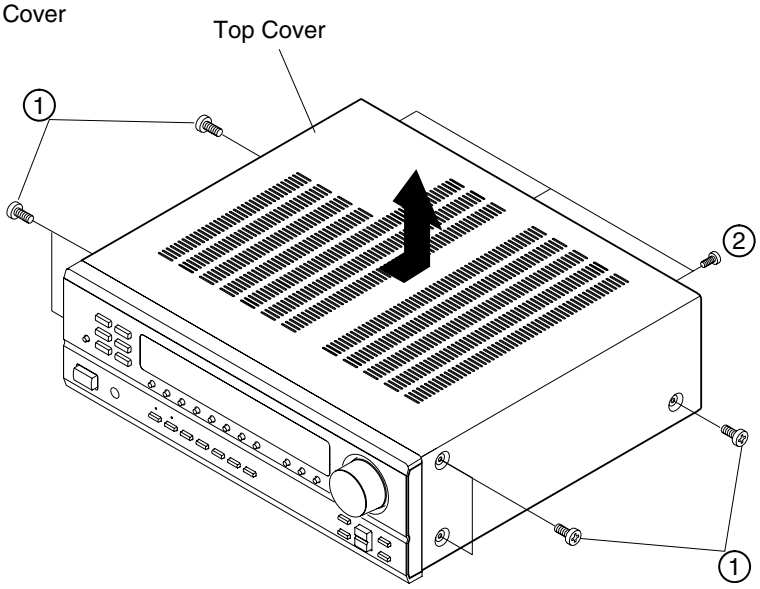


## Front Panel

1. Remove 4 screws ③ and 2 screws ④.
2. Detach the Front Panel in the arrow direction.

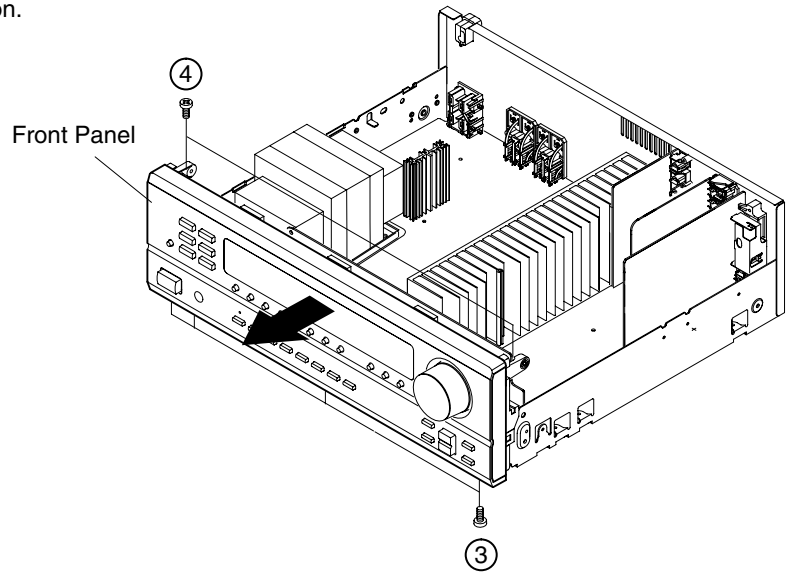


## Rear Panel

1. Remove cord bushing ⑤ from the Rear Panel.
2. Remove 26 screws ⑥.
3. Detach the Rear Panel in the arrow direction.

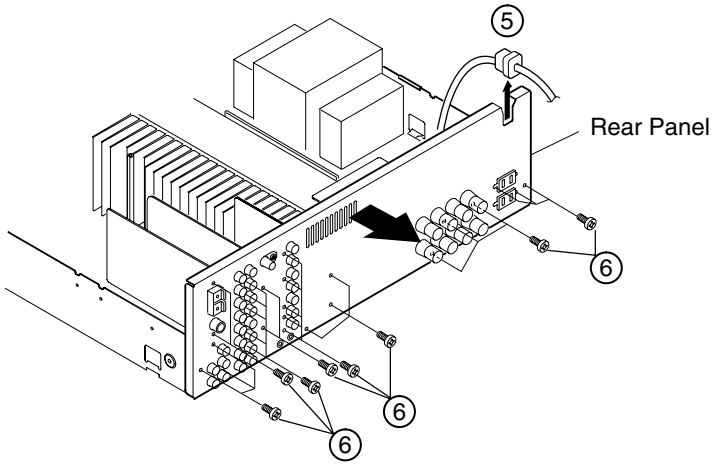

# ADJUSTMENT

## Tuner Section

### CONNECTION DIAGRAM OF MEASURING INSTRUMENTS

● **FM**

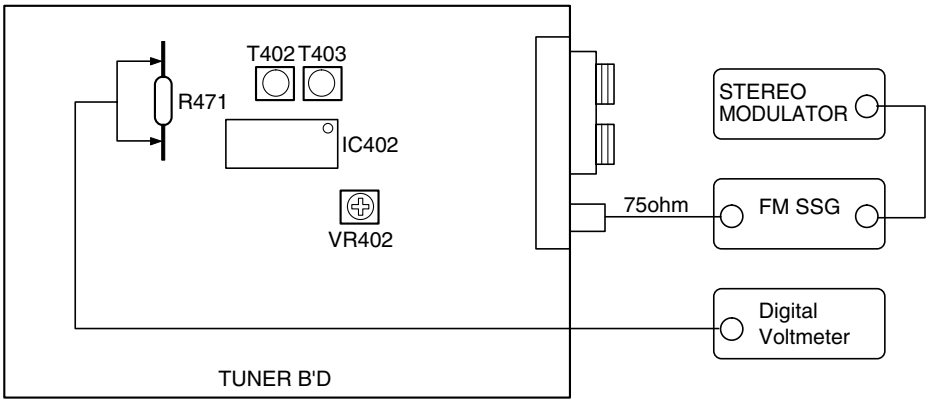


**FM ALIGNMENT**

| Step | Alignment Item | Tuning Frequency Setting | Input | | | | | Output | | Adjustment | |
|---|---|---|---|---|---|---|---|---|---|---|---|
| | | | Type | Frequency | Input Level | Modulation | Coupling | Type | Connect to | Points | Adjust to |
| 1 | Center Adjustment | 98.1MHz (98.0MHz) | FM SSG | 98.1MHz | 60dBμ | Mono 1kHz 100% | Antenna Terminal | Digital Voltmeter | R471 | T402 | ± 50mV |
| 2 | Distortion | 98.1MHz (98.0MHz) | FM SSG | 98.1MHz | 60dBμ | Mono 1kHz 100% | Antenna Terminal | Distortion Meter | Output Terminal (L) | T403 | Minimum Distortion |
| 3 | Repeat Steps 1 and 2 | | | | | | | | | | |
| 4 | Signal Level | 98.1MHz (98.0MHz) | FM SSG | 98.1MHz | 20dBμ | OFF | Antenna Terminal | Light "TUNED" on FL Display | | VR402 | $20^{+14}_{-10}$ dB |

● **AM**

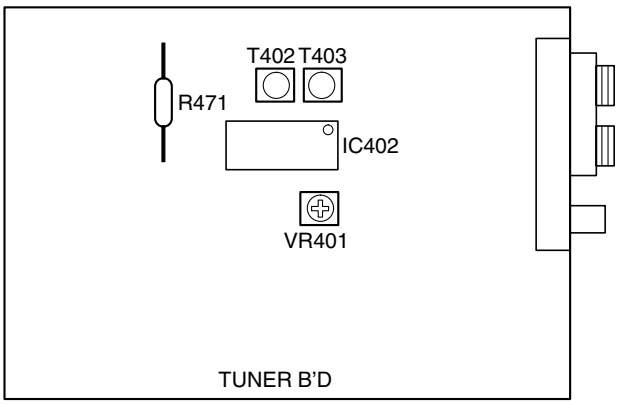


**AM ALIGNMENT**

| Step | Alignment Item | Frequency | Input | Output | | Adjustment | | Remarks |
|---|---|---|---|---|---|---|---|---|
| | | | | Type | Connect to | Points | Adjust to | |
| 1 | Signal Level | 999 (1000) kHz | AM SSG | — | — | VR401 | Light "TUNED" on FL Display | SSG OUTPUT 74dBμ (EMF) |

## Audio Section

### Idling Current

Required measurement equipment : DC Voltmeter

### Preparation

(1) Avoid direct blow from an air conditioner or an electric fan, and adjust the unit at normal room tempereture 15 °C ~ 30 °C (59 °F ~ 86 °F).

(2) Presetting
- POWER (Power sourse switch) → OFF
- SPEAKER (Speaker terminal) → No load (Do not connect speaker, dummy resistor, etc.)

### Adjustment

(1) Remove top cover and set VR101, VR102 on Amp. Unit at full counterclockwise ( ↺ ) position.

(2) Connect DC Voltmeter to test points (Lch: TP101, Rch: TP102).

(3) Connect power cord to AC Line, and turn power switch "ON".

(4) Presetting. MASTER VOLUME : "---" counterclockwise ( ↺ min.)
FUNCTION : CD

(5) Within 2 minutes after the power on, turn VR101 clockwise ( ↻ ) to adjust the TEST POINT voltage to 1.5 mV ±0.5 mV DC.

(6) After 10 minutes from the preset above, turn VR101 to set the voltage to 2.5 mV ±0.5 mV DC.

(7) Adjust the Variable Resistors of other channels in the same way.

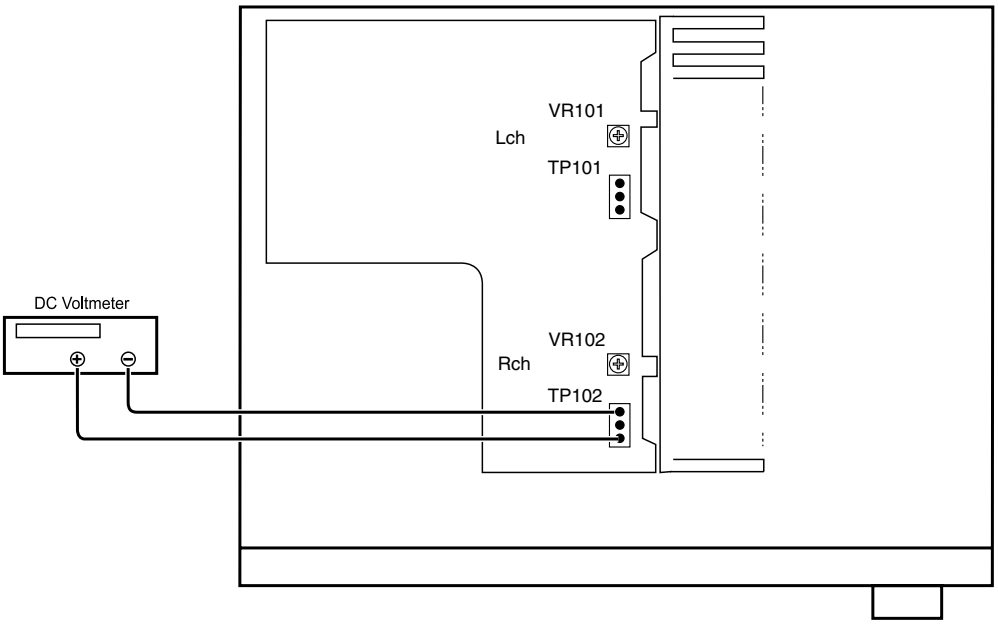

## BLOCK DIAGRAM

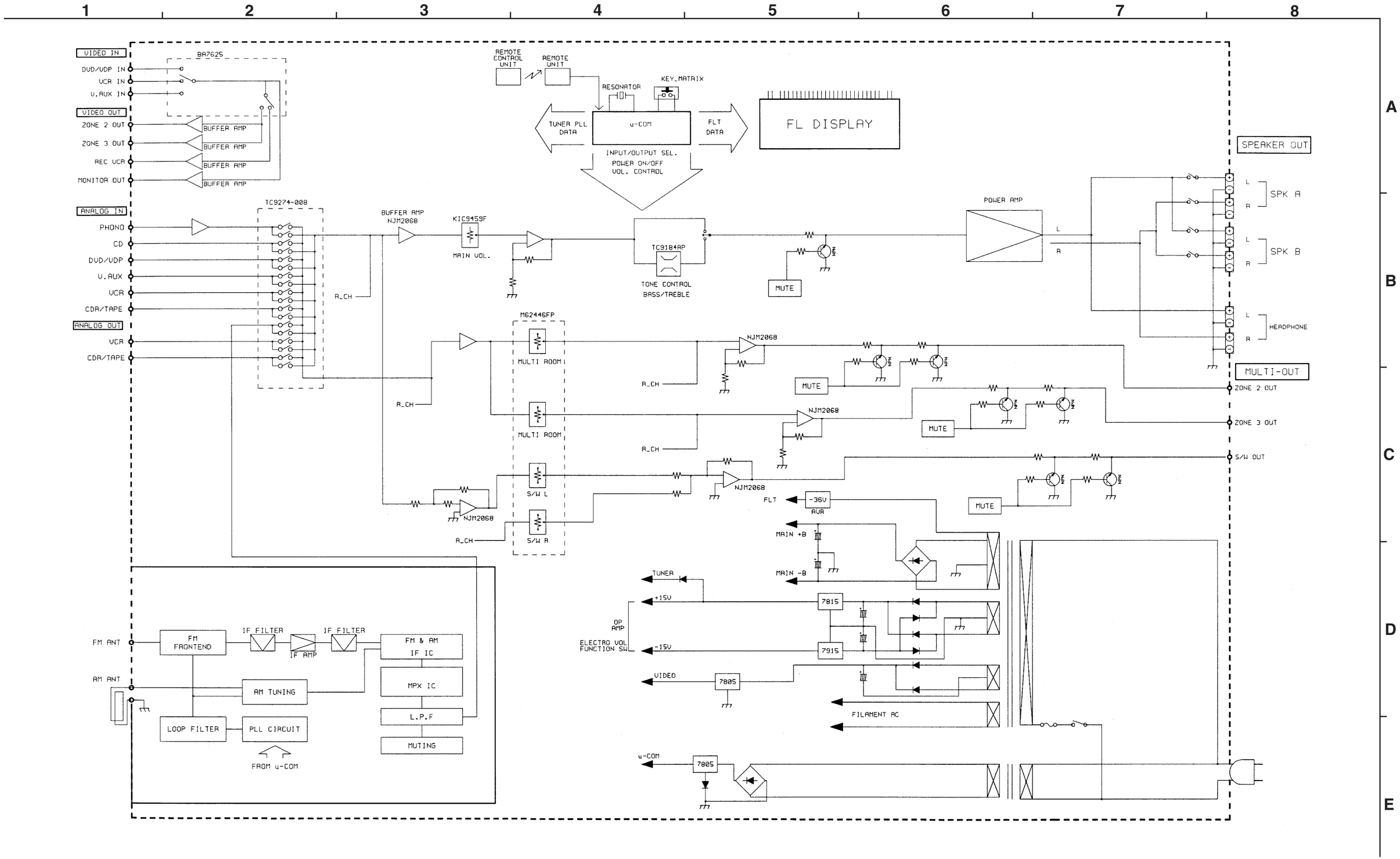

## LEVEL DIAGRAM

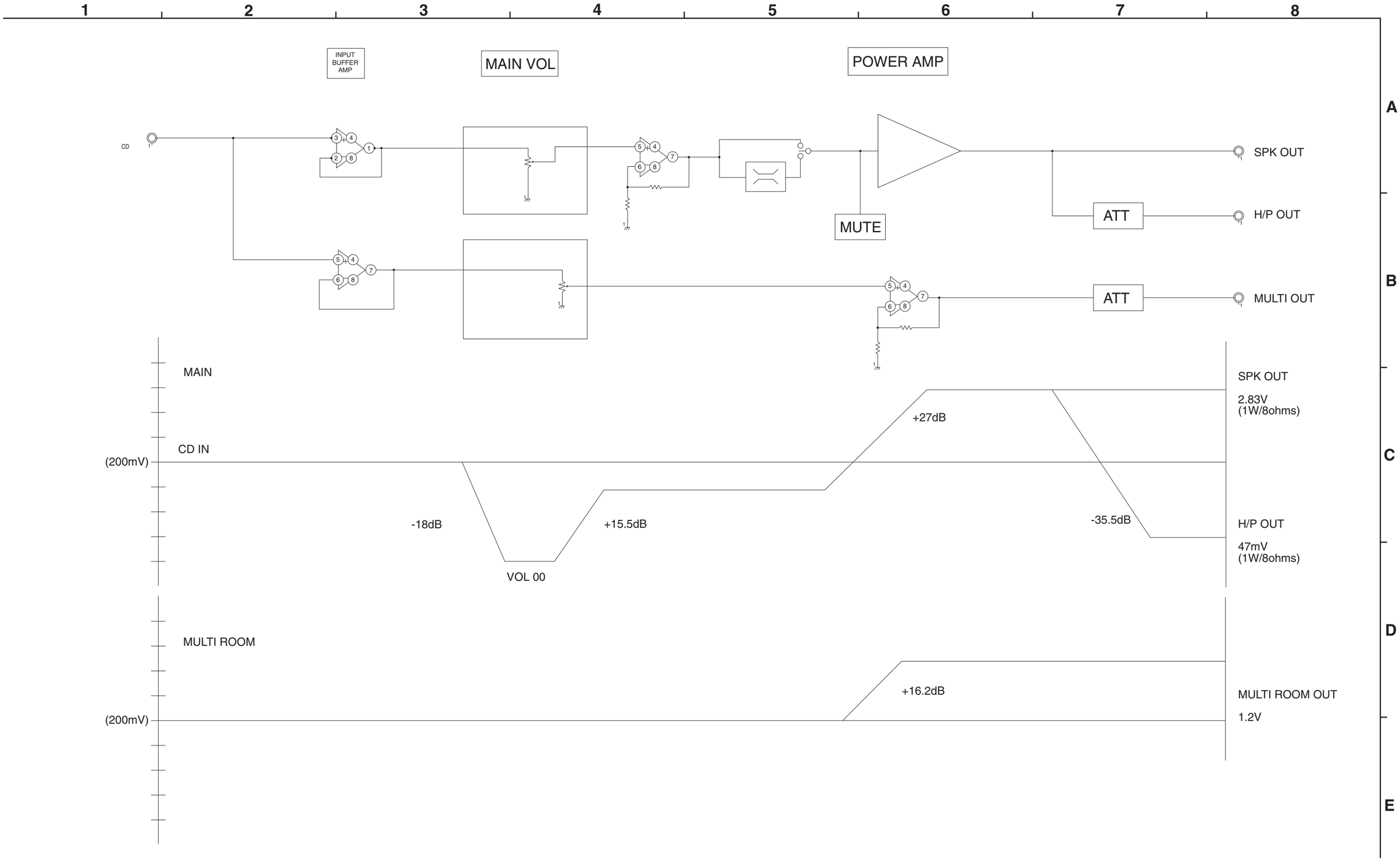

# SEMICONDUCTORS

## ● IC's

### CXP82840-319Q (IC900)

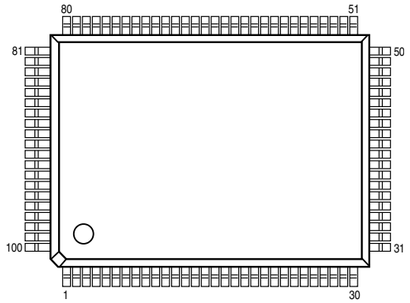


### CXP82840-319Q Terminal Function

| Pin No. | Pin Name | I/O | Function |
|---|---|---|---|
| 1 | G2/A1 | O | FL G02 |
| 2 | G1/A0 | O | FL G01 |
| 3 | NC(Vdd) | I | NC(Connect to Vdd) |
| 4 | POWER DOWN | I | AC OFF Detect |
| 5 | ENC VOLUME UP | I | Encoder VOLUME UP |
| 6 | RDS CLOCK | I | RDS clock input(TDA7330) |
| 7 | ENC VOLUME DOWN | I | Encoder VOLUME DOWN |
| 8 | REMOCON | I | Remote signal input. |
| 9 | PROTECTION | I | Protection detecting input. |
| 10 | SUB ZONE2 LED | O | ZONE3 LED indicator control |
| 11 | SUB ZONE1 LED | O | ZONE2 LED indicator control |
| 12 | 62446 LATCH | O | Electronic volume control.(M62446 LATCH) |
| 13 | FUNCTION SW 1 CE | O | Function IC control.(TC9274 CE) |
| 14 | FUNCTION 1/2 DATA | O | Function IC control.(TC9274 DATA) |
| 15 | FUNCTION 1/2 CLOCK | O | Function IC control.(TC9274 CLOCK) |
| 16 | VOLUME,PLL,4094,DATA | O | LC72131,M62446,KIC9459,TC9184,TC4094(DATA) |
| 17 | VOLUME,PLL,4094,CLOCK | O | LC72131,M62446,KIC9459,TC9184,TC4094(CLOCK) |
| 18 | TUNED | I | TUNED signal in. |
| 19 | STEREO | I | STEREO signal in. |
| 20 | IF COUNT | I | PLL data in.(LC72131) |
| 21 | TUNER MUTE | O | Tuner mute output. |
| 22 | PLL CE | O | LC72131(CE) |
| 23 | 4094 STB | O | TC4094(STB) |
| 24 | VOLUME STB | O | KIC9459,TC9184(STB) |
| 25 | SUB 1 MUTE | O | ZONE2 mute control. |
| 26 | MAIN MUTE | O | MAIN,Subwoofer mute output. |
| 27 | POWER RELAY | O | Power supply relaycontrol. |
| 28 | AV REF. | I | Reference voltage input for A/D converter. |
| 29 | 1511 DATA | O | Not used. |
| 30 | RDS DATA | I | Not used. |
| 31 | KEY IN 1 | I | Key input 1 |
| 32 | KEY IN 2 | I | Key input 2 |
| 33 | KEY IN 3 | I | Key input 3 |
| 34 | STEP OPTION | I | Area select. |
| 35 | SET OPTION | I | Model select. |
| 36 | SPEAKER A LED 1 | O | SPEAKER A LED indicator control |
| 37 | A VSS | I | A/D converter GND. |
| 38 | RESET | I | Low-level active,system reset. |
| 39 | EXTAL | I | EXTAL(10MHz) |
| 40 | XTAL | O | XTAL(10MHz) |
| 41 | VSS | I | GND |
| 42 | NC(TX) | O | Not used. |
| 43 | G(TEX) | I | GND |
| 44 | VDD | I | Vcc SUPPLY. |
| 45 | VFDP | I | FDP voltage supply. |
| 46 | SPEAKER B LED 2 | O | SPEAKER B LED indicator control |
| 47 | STBY LED 3 | O | STANDBY LED indicator control |
| 48 | PD2/A53 | O | FL P38 |
| 49 | PD3/A52 | O | FL P37 |
| 50 | PD4/A51 | O | FL P36 |
| 51 | PD5/A50 | O | FL P01 |
| 52 | PD6/A49 | O | FL P02 |
| 53 | PD7/A48 | O | FL P03 |
| 54 | PF0/A47 | O | FL P04 |
| 55 | PF1/A46 | O | FL P05 |
| 56 | PF2/A45 | O | FL P06 |
| 57 | PF3/A44 | O | FL P07 |
| 58 | PF4/A43 | O | FL P08 |
| 59 | PF5/A42 | O | FL P09 |
| 60 | PF6/A41 | O | FL P10 |
| 61 | PF7/A40 | O | FL P11 |
| 62 | PG0/A39 | O | FL P12 |
| 63 | PG1/A38 | O | FL P13 |
| 64 | PG2/A37 | O | FL P14 |
| 65 | PG3/A36 | O | FL P15 |
| 66 | PG4/A35 | O | FL P16 |
| 67 | PG5/A34 | O | FL P17 |
| 68 | PG6/A33 | O | FL P18 |
| 69 | PG7/A32 | O | FL P19 |
| 70 | PH0/A31 | O | FL P20 |
| 71 | PH1/A30 | O | FL P21 |
| 72 | PH2/A29 | O | FL P22 |
| 73 | PH3/A28 | O | FL P23 |
| 74 | PH4/A27 | O | FL P24 |
| 75 | PH5/A26 | O | FL P25 |
| 76 | PH6/A25 | O | FL P26 |
| 77 | PH7/A24 | O | FL P27 |
| 78 | A23 | O | FL P28 |
| 79 | A22 | O | FL P29 |
| 80 | A21 | O | FL P30 |
| 81 | A20 | O | FL P31 |
| 82 | A19 | O | FL P32 |
| 83 | A18 | O | FL P33 |
| 84 | A17 | O | FL P34 |
| 85 | A16 | O | FL P35 |
| 86 | G16 | O | FL G16 |
| 87 | G15 | O | FL G15 |
| 88 | G14 | O | FL G14 |
| 89 | Vdd | I | Vcc SUPPLY. |
| 90 | G13 | O | FL G13 |
| 91 | G12 | O | FL G12 |
| 92 | G11 | O | FL G11 |
| 93 | G10 | O | FL G10 |
| 94 | G9 | O | FL G09 |
| 95 | G8 | O | FL G08 |
| 96 | G7 | O | FL G07 |
| 97 | G6 | O | FL G06 |
| 98 | G5 | O | FL G05 |
| 99 | G4 | O | FL G04 |
| 100 | G3 | O | FL G03 |

## LC72131M (IC401)

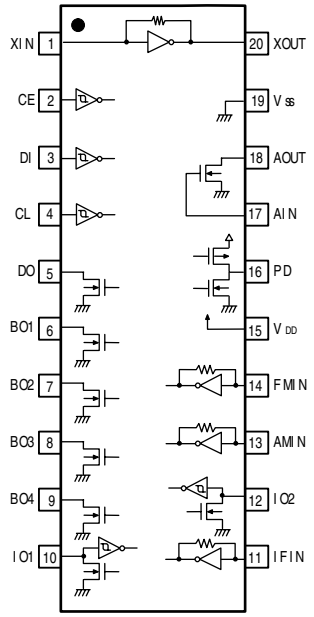


## LA1266 (IC402)

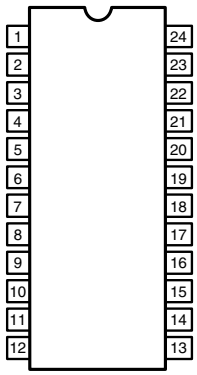

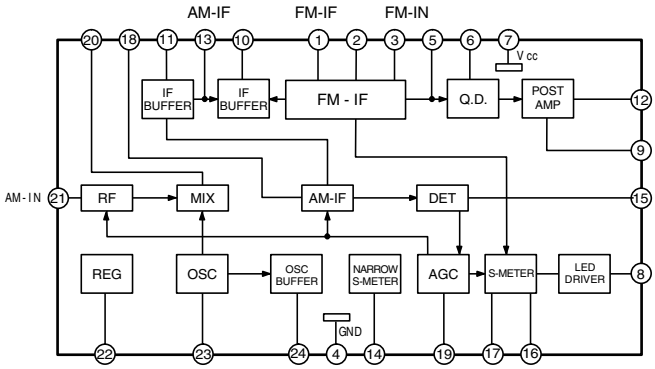


## LA3401 (IC403)

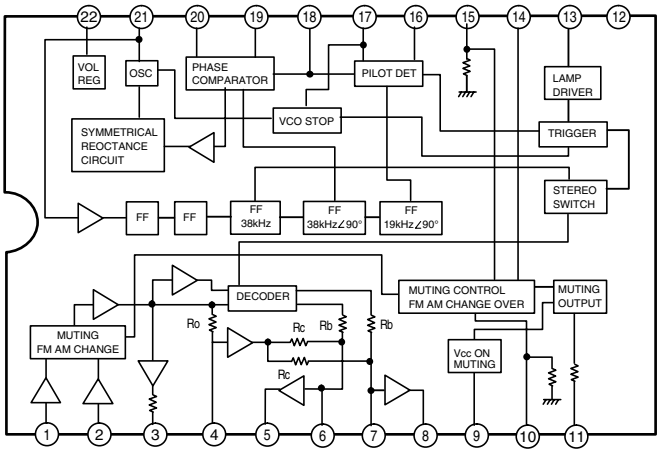


## TC9184AP (IC602)

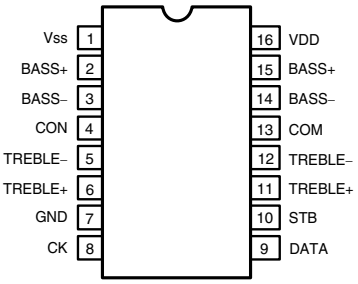


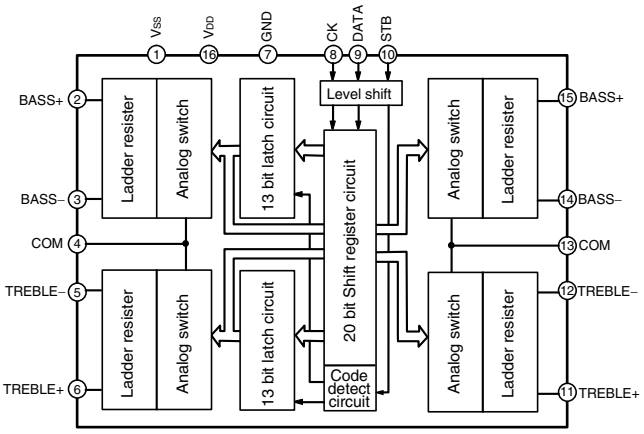


## BA7625 (IC501)

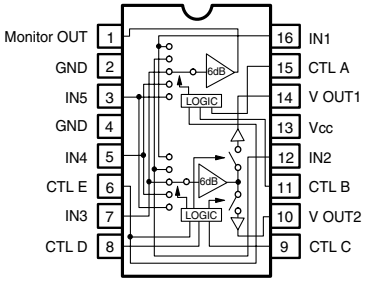


| A | B | E | MONITOR OUT |
|---|---|---|---|
| L | L | * | IN 1 |
| H | L | * | IN 2 |
| L | H | * | IN 3 |
| H | H | L | IN 4 |
| H | H | H | IN 5 |

| C | D | E | V OUT 1 |
|---|---|---|---|
| L | L | * | — |
| H | L | * | IN 2 |
| L | H | * | IN 3 |
| H | H | L | IN 4 |
| H | H | H | IN 5 |

| C | D | E | V OUT 2 |
|---|---|---|---|
| L | L | * | IN 1 |
| H | L | * | — |
| L | H | * | IN 3 |
| H | H | L | IN 4 |
| H | H | H | IN 5 |

Note 1: * mark means that feasible for either H or L.
Note 2: Each input terminal is provided with sink chip clamp (BA7625).
Each input terminal takes 20kohm at the end (BA7626).

### TC9274N-008 (IC303)

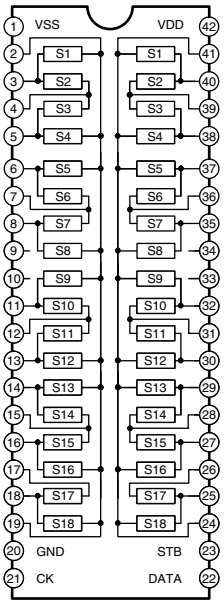


### KIA7805AP (IC103)
### NJM7805FA (IC104)
### KIA7815AP (IC101)

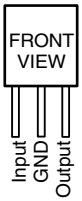


### NJM7915FA (IC102)

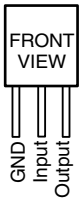


### PC74HC4094 (IC604)

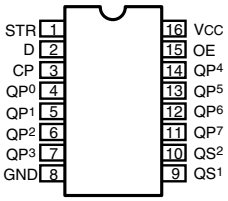


### KIC9459F (IC601)

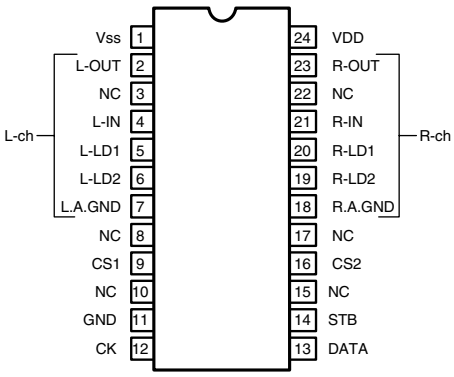


### M62446FP (IC603)

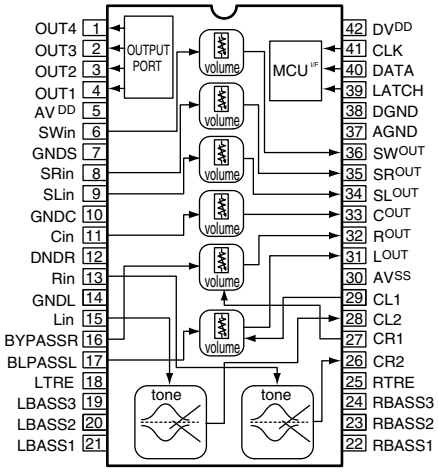


### CXA1511M(IC502)

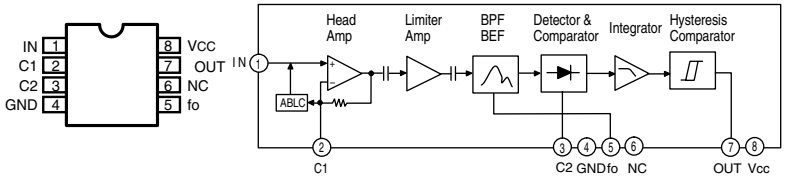


### NJM2068DD (IC300～302, 605～610)

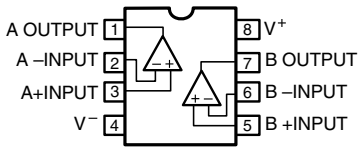


## ● IC PROTECTOR

### ICP-N15 (IC105)

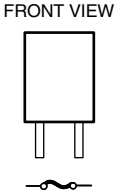


## ● POSISTOR

### P43T7D330BW16

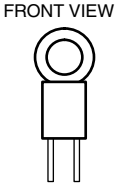


## ● IR SENSOR

### NJL64H380A(RMC900)

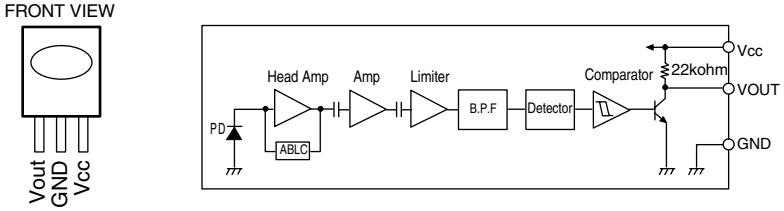

## ● TRANSISTORS

**DTA114EK**
**DTA114YK**
**DTC114YK**

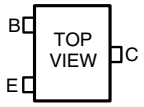


**DTA series**

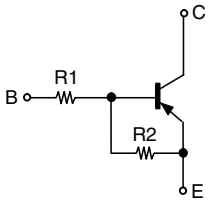


**DTC series**

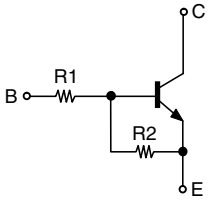


**DTA114ES**
**DTA144ES**
**DTC114ES**
**DTC114YS**
**DTC144ES**

| | R1 | R2 |
|---|---|---|
| DTA114EK | 10kohm | 10kohm |
| DTA114ES | 10kohm | 10kohm |
| DTA114YK | 10kohm | 47kohm |
| DTA114ES | 47kohm | 47kohm |

| | R1 | R2 |
|---|---|---|
| DTC114ES | 10kohm | 10kohm |
| DTC114YK | 10kohm | 47kohm |
| DTC114YS | 10kohm | 47kohm |
| DTC144ES | 47kohm | 47kohm |

**KTC3880S**

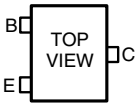


**2SD947F**
**KTA1266Y**
**KSA992F**
**KSC1845F**
**KTC3200BL**
**KTC3198Y**
**KTA1268BL**
**KSA916Y**
**2SC1740S**
**KTC2874B**

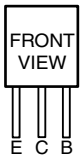


**2SB1560**
**2SD2390**

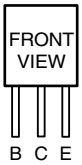


## ● DIODES (LED Included)

**MTZJ3.3B**
**MTZJ5.1B**
**MTZJ5.6B**
**MTZJ6.2B**
**MTZJ6.8B**
**MTZJ7.5A**
**MTZJ7.5B**
**MTZJ18B**
**MTZJ20B**

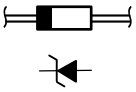

**1N4007**
**1SS133**

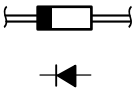

**KDS160**

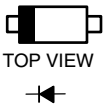


**HL-50RDRF4**

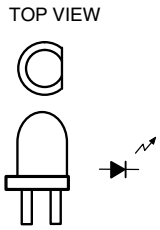


**KBPC604**

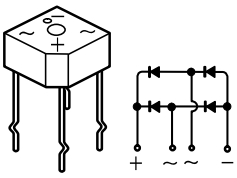

## ● FL DISPLAY

### 16-st-42GNK (FL900)

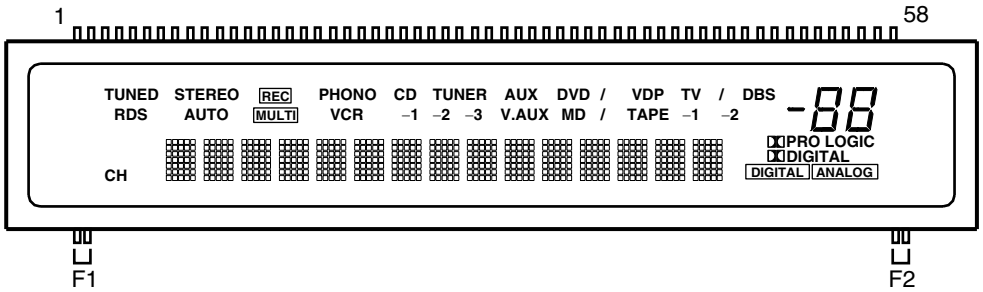


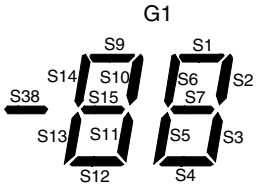


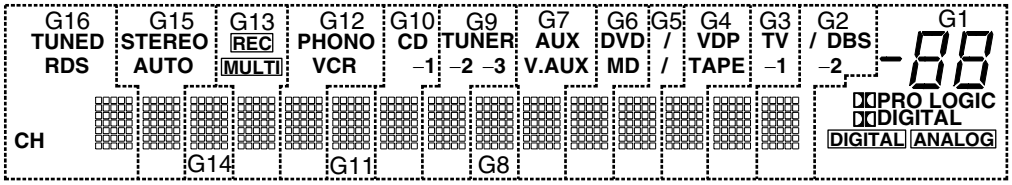


G2~G16

| | | | | |
|---|---|---|---|---|
| S1 | S2 | S3 | S4 | S5 |
| S6 | S7 | S8 | S9 | S10 |
| S11 | S12 | S13 | S14 | S15 |
| S16 | S17 | S18 | S19 | S20 |
| S21 | S22 | S23 | S24 | S25 |
| S26 | S27 | S28 | S29 | S30 |
| S31 | S32 | S33 | S34 | S35 |

### Pin Assignment

| | | | | | | | | | | | | | | | | | | | | |
|---|---|---|---|---|---|---|---|---|---|---|---|---|---|---|---|---|---|---|---|---|
| PIN NO. | 1 | 2 | 3 | 4 | 5 | 6 | 7 | 8 | 9 | 10 | 11 | 12 | 13 | 14 | 15 | 16 | 17 | 18 | 19 | 20 |
| CONNECTION | F1 | F1 | S1 | S2 | S3 | S4 | S5 | S6 | S7 | S8 | S9 | S10 | S11 | S12 | S13 | S14 | S15 | S16 | S17 | S18 |
| PIN NO. | 21 | 22 | 23 | 24 | 25 | 26 | 27 | 28 | 29 | 30 | 31 | 32 | 33 | 34 | 35 | 36 | 37 | 38 | 39 | 40 |
| CONNECTION | S19 | S20 | S21 | S22 | S23 | S24 | S25 | S26 | S27 | S28 | S29 | S30 | S31 | S32 | S33 | S34 | S35 | S36 | S37 | S38 |
| PIN NO. | 41 | 42 | 43 | 44 | 45 | 46 | 47 | 48 | 49 | 50 | 51 | 52 | 53 | 54 | 55 | 56 | 57 | 58 | | |
| CONNECTION | G16 | G15 | G14 | G13 | G12 | G11 | G10 | G9 | G8 | G7 | G6 | G5 | G4 | G3 | G2 | G1 | F2 | F2 | | |

F1,F2 : Filament
G1~G16 : Grid
S1~S38 : Anode

### Anode & Grid Assignment

| | G1 | G2~G16 | | G1 | G2~G16 | | G1 | G2~G16 | | G1 | G2~G16 |
|---|---|---|---|---|---|---|---|---|---|---|---|
| S1 | S1 | S1 | S10 | S10 | S10 | S19 | —— | S19 | S28 | —— | S28 |
| S2 | S2 | S2 | S11 | S11 | S11 | S20 | —— | S20 | S29 | —— | S29 |
| S3 | S3 | S3 | S12 | S12 | S12 | S21 | —— | S21 | S30 | —— | S30 |
| S4 | S4 | S4 | S13 | S13 | S13 | S22 | —— | S22 | S31 | —— | S31 |
| S5 | S5 | S5 | S14 | S14 | S14 | S23 | —— | S23 | S32 | —— | S32 |
| S6 | S6 | S6 | S15 | S15 | S15 | S24 | —— | S24 | S33 | —— | S33 |
| S7 | S7 | S7 | S16 | —— | S16 | S25 | —— | S25 | S34 | —— | S34 |
| S8 | —— | S8 | S17 | DIGITAL | S17 | S26 | —— | S26 | S35 | —— | S35 |
| S9 | S9 | S9 | S18 | PRO LOGIC | S18 | S27 | —— | S27 | | | |

| | G1 | G2 | G3 | G4 | G5 | G6 | G7 | G8 | G9 | G10 | G11 | G12 | G13 | G14 | G15 | G16 |
|---|---|---|---|---|---|---|---|---|---|---|---|---|---|---|---|---|
| S36 | DIGITAL | / | TV | VDP | /(DVD) | DVD | AUX | —— | TUNER | CD | —— | PHONO | REC | —— | STEREO | TUNED |
| S37 | ANALOG | –2 | –1 | TAPE | /(MD) | MD | V.AUX | —— | –2 | –1 | —— | VCR | MULTI | —— | AUTO | RDS |
| S38 | S38 | DBS | —— | —— | —— | —— | —— | —— | –3 | —— | —— | —— | —— | —— | —— | CH |

# PRINTED WIRING BOARDS

## MAIN P.W.B. UNIT Ass'y

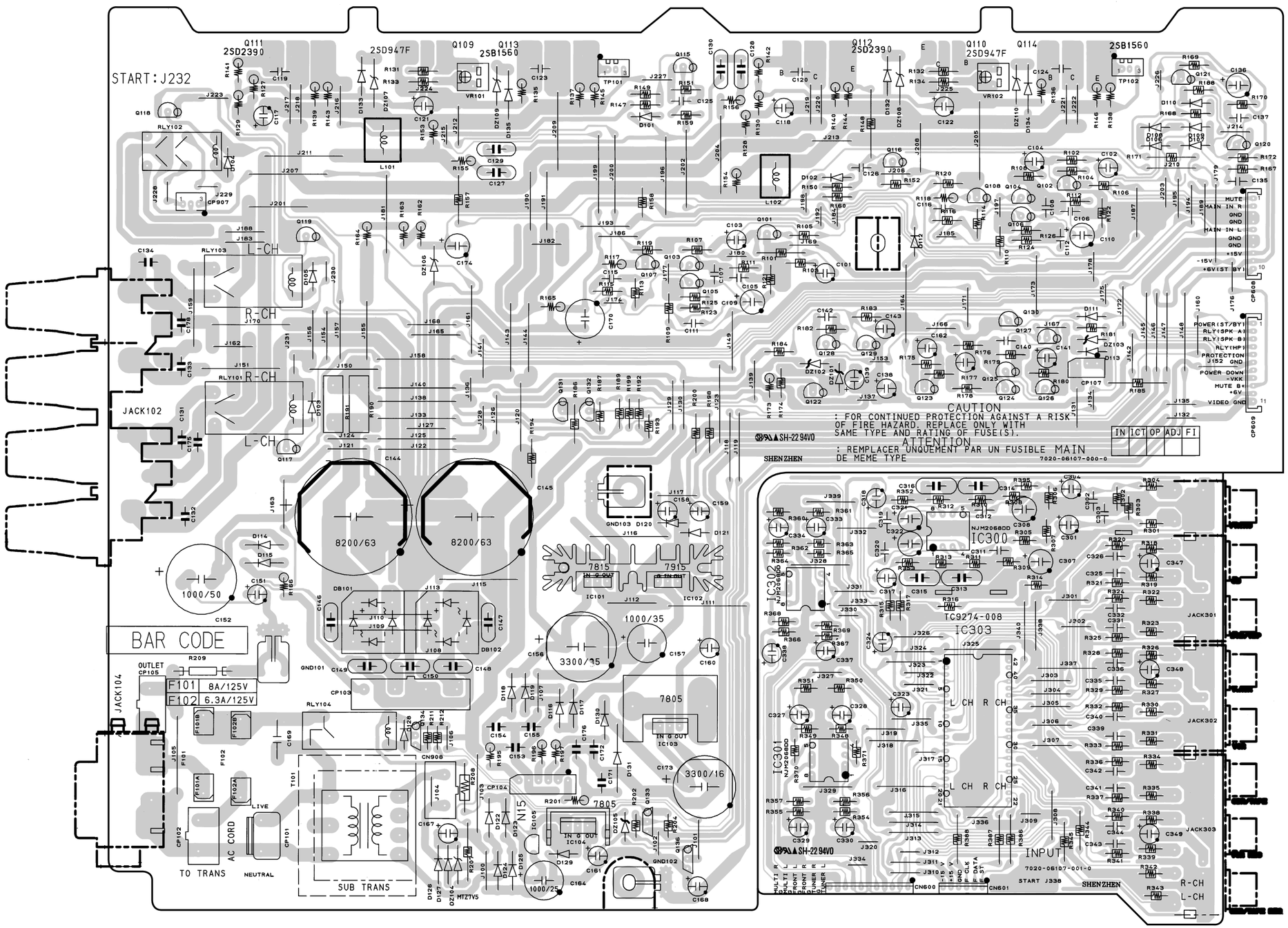


COMPONENT SIDE

## FRONT P.W.B. UNIT Ass'y

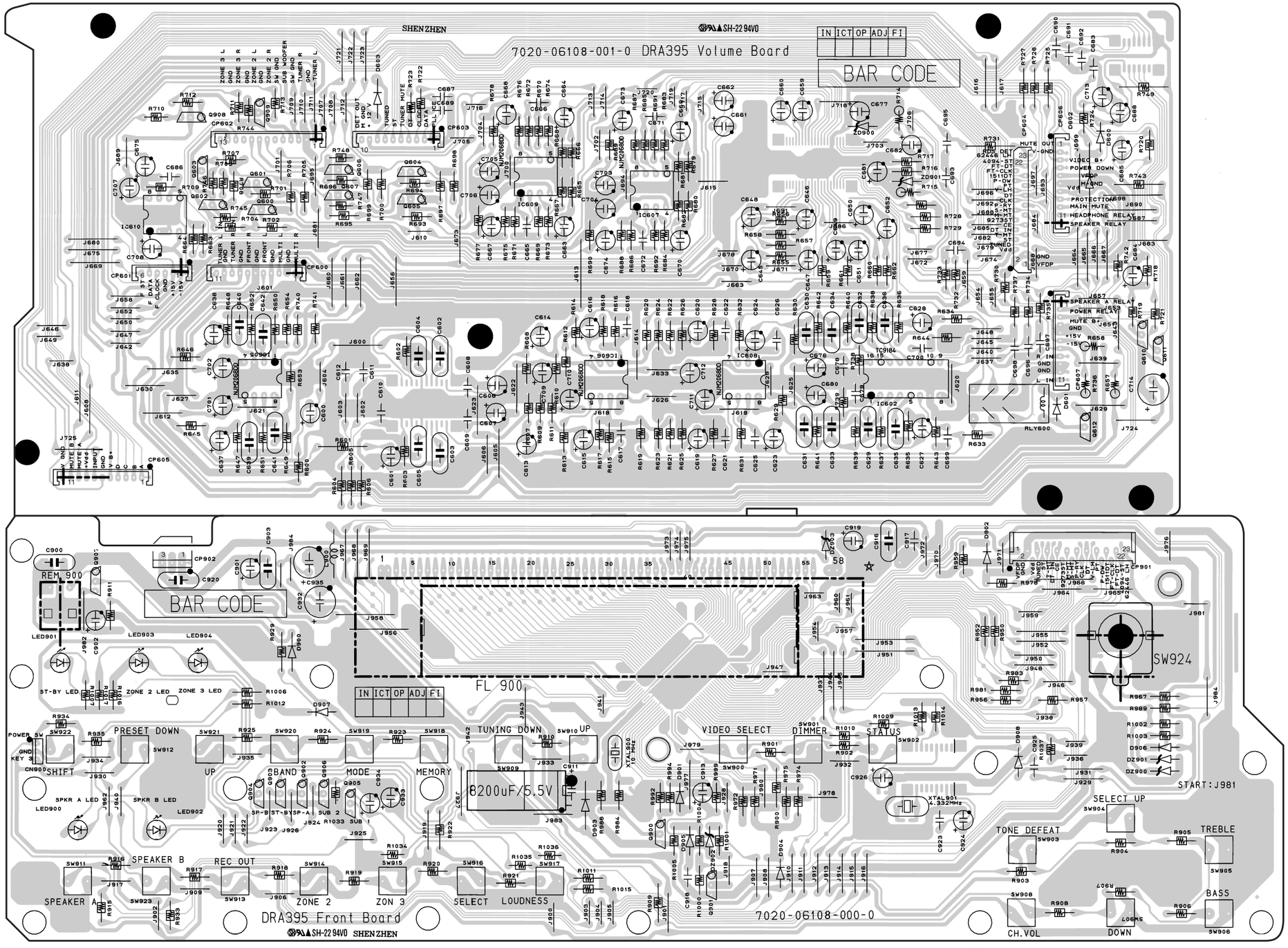


COMPONENT SIDE

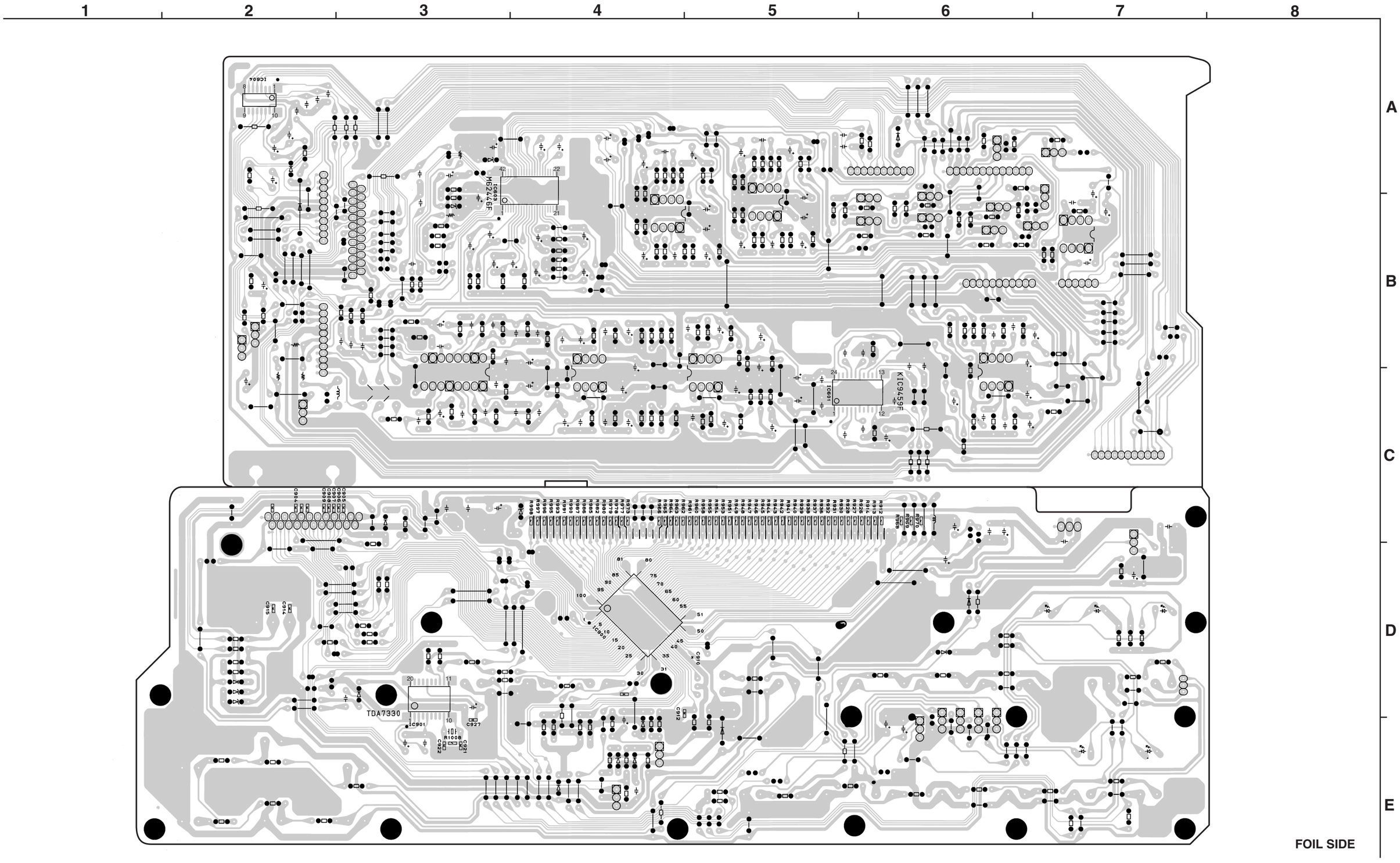
1
2
3
4
5
6
7
8
A
B
C
D
E
M62446F
KIC3655F
TDA7330
FOIL SIDE

## TUNER P.W.B. UNIT Ass'y

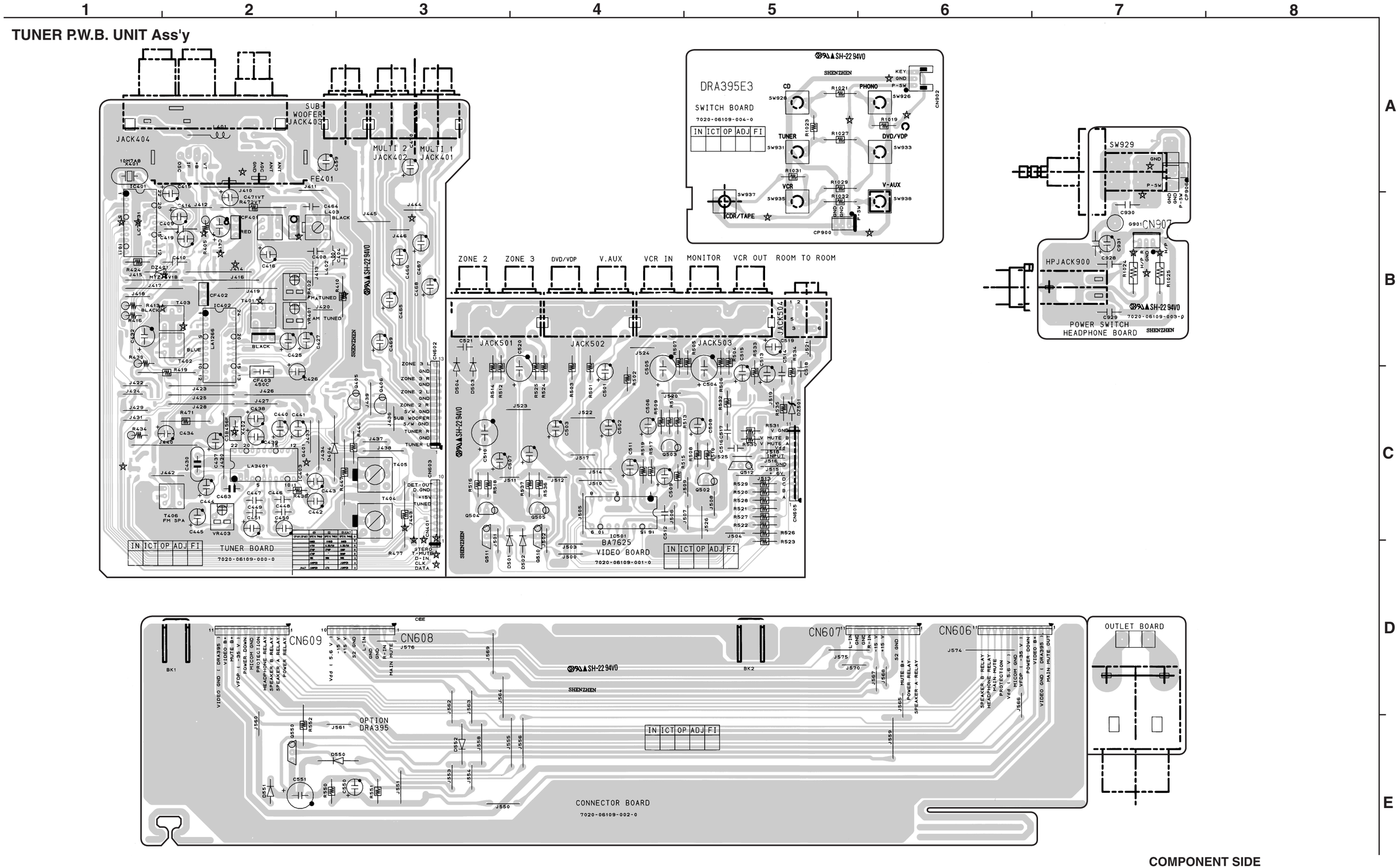


COMPONENT SIDE

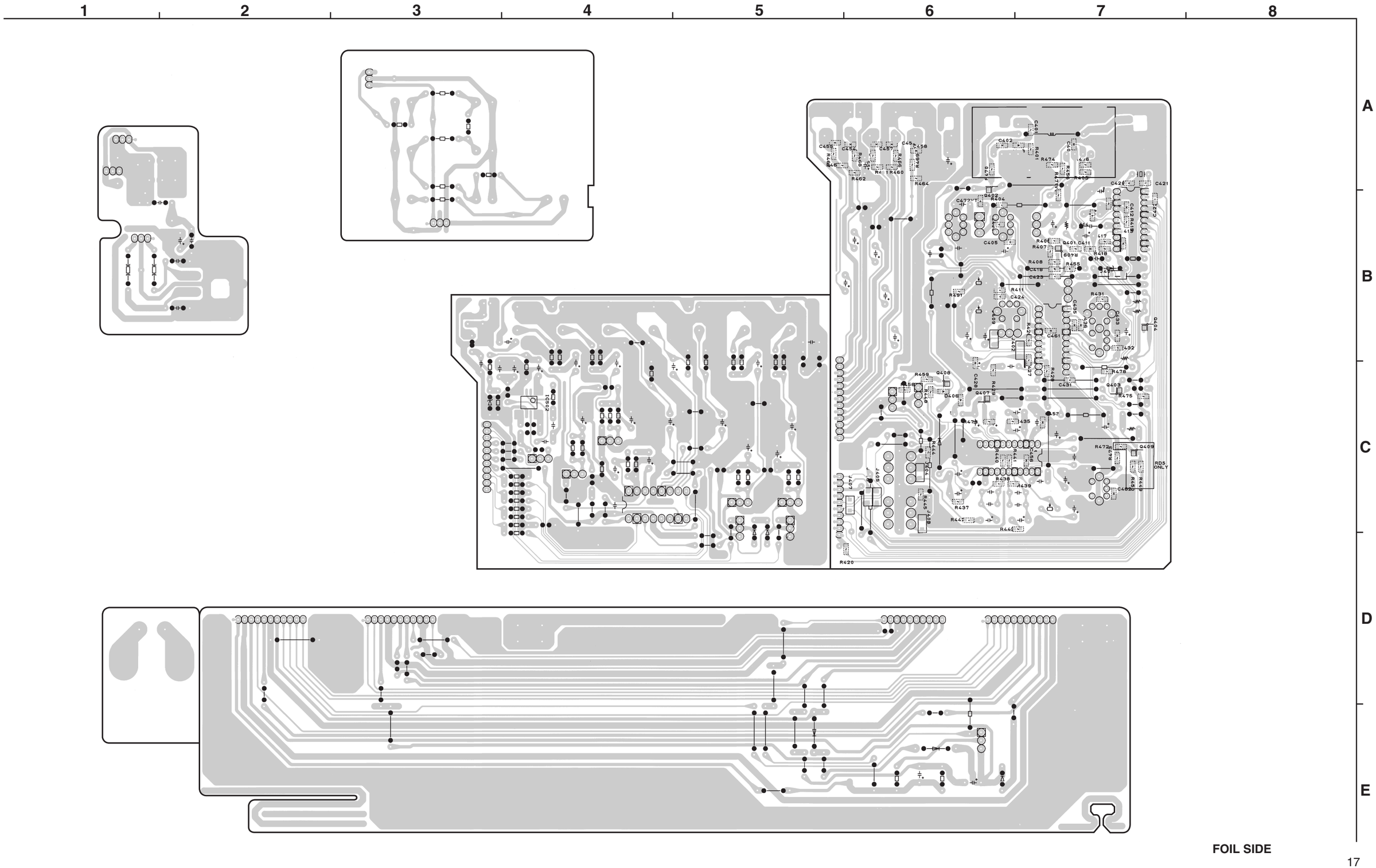


FOIL SIDE

# NOTE FOR PARTS LIST

- Part indicated with the mark "⦿" are not always in stock and possibly to take a long period of time for supplying, or in some case supplying of part may be refused.
- When ordering of part, clearly indicate "1" and "I" (i) to avoid mis-supplying.
- Ordering part without stating its part number can not be supplied.
- Part indicated with the mark "★" is not illustrated in the exploded view.
- Not including Carbon Film ±5%, 1/4W Type in the P.W.Board parts list. (Refer to the Schematic Diagram for those parts.)

**WARNING:**

Parts marked with this symbol ⚠ ▭ have critical characteristics.
Use ONLY replacement parts recommended by the manufacturer.

## ● Resistors

**Ex.:** RN 14K 2E 182 G FR

Type | Shape and performance | Power | Resistance | Allowable error | Others

| | | | |
|---|---|---|---|
| RD : Carbon | 2B : 1/8W | F : ±1% | P : Pulse-resistant type |
| RC : Composition | 2E : 1/4W | G : ±2% | NL : Low noise type |
| RS : Metal oxide film | 2H : 1/2W | J : ±5% | NB : Non-burning type |
| RW : Winding | 3A : 1W | K : ±10% | FR : Fuse-resistor |
| RN : Metal film | 3D : 2W | M : ±20% | F : Lead wire forming |
| RK : Metal mixture | 3F : 3W | | |
| | 3H : 5W | | |

✻ **Resistance**

1 8 2 ⇒ 1800 ohm = 1.8 kohm
Indicates number of zeros after effective number.
2-digit effective number.
• Units: ohm

1 R 2 ⇒ 1.2 ohm
1-digit effective number.
2-digit effective number, decimal point indicated by R.
• Units: ohm

## ● Capacitors

**Ex.:** CE 04W 1H 2R2 M BP

Type | Shape and performance | Dielectric strength | Capacity | Allowable error | Others

| | | | |
|---|---|---|---|
| CE : Aluminum foil electrolytic | 0J : 6.3V | F : ±1% | HS : High stability type |
| CA : Aluminum solid electrolytic | 1A : 10V | G : ±2% | BP : Non-polar type |
| CS : Tantalum electrolytic | 1C : 16V | J : ±5% | HR : Ripple-resistant type |
| CQ : Film | 1E : 25V | K : ±10% | DL : For change and discharge |
| CK : Ceramic | 1V : 35V | M : ±20% | HF : For assuring high requency |
| CC : Ceramic | 1H : 50V | Z : +80% −20% | U : UL part |
| CP : Oil | 2A : 100V | P : +100% −0% | C : CSA part |
| CM : Mica | 2B : 125V | C : ±0.25pF | W : UL-CSA type |
| CF : Metallized | 2C : 160V | D : ±0.5pF | F : Lead wire forming |
| CH : Metallized | 2D : 200V | = : Others | |
| | 2E : 250V | | |
| | 2H : 500V | | |
| | 2J : 630V | | |

✻ **Capacity (electrolyte only)**

2 2 2 ⇒ 2200μF
Indicates number of zeros after effective number.
2-digit effective number.
• Units: μF.

2 R 2 ⇒ 2.2μF
1-digit effective number.
2-digit effective number, decimal point indicated by R.
• Units: μF.

✻ **Capacity (except electrolyte)**

2 2 2 ⇒ 2200pF=0.0022μF
(More than 2) Indicates number of zeros after effective number.
2-digit effective number.
• Units: pF.

2 2 1 ⇒ 220pF
(0 or 1) Indicates number of zeros after effective number.
2-digit effective number.
• Units: pF.

• When the dielectric strength is indicated in AC, "AC" is included after the dieelectric strength value.

# PARTS LIST OF P.W.B. UNIT

## MAIN P.W.B. UNIT ASS'Y

| Ref. No. | Part No. | Part Name | Remarks |
|---|---|---|---|
| **SEMICONDUCTORS GROUP** | | | |
| IC101 | 963 0057 903 | IC KIA7815AP | J126781500060 |
| IC102 | 963 0044 806 | IC NJM7915FA | J126791500010 |
| IC103 | 960 0057 709 | IC KIA7805AP | J126780500360 |
| IC104 | 960 0196 001 | IC NJM7805FA | J126780500130 |
| IC105 | 960 0195 808 | IC ICP-N15 | J120001500030 |
| IC300-302 | 960 0179 701 | IC NJM2068DD | J121206800000 |
| IC303 | 963 0071 400 | IC TC9274N-008 | J080927400010 |
| Q101,102 | 960 0196 603 | Transistor KTC2874B | J502287400010 |
| Q103-106 | 960 0196 205 | Transistor KSA992Y | J5000992F0050 |
| Q107,108 | 960 0196 506 | Transistor KSC1845F | J5021845F0000 |
| Q115,116 | 960 0196 506 | Transistor KSC1845F | J5021845F0000 |
| Q117-119 | 963 0022 006 | Transistor DTC114YS | J6020114Y0050 |
| Q120 | 960 0196 302 | Transistor KTA1268BL | J5001268B0050 |
| Q121 | 960 0196 700 | Transistor KTC3200BL | J5023200B0050 |
| Q122 | 960 0189 005 | Transistor KSA916Y | J5000916Y0050 |
| Q123 | 960 0005 105 | Transistor KTA1266Y | J5001266Y0050 |
| Q124 | 960 0005 202 | Transistor KTC3198Y | J5023198Y0000 |
| Q125 | 960 0196 302 | Transistor KTA1268BL | J5001268B0050 |
| Q126,127 | 960 0005 202 | Transistor KTC3198Y | J5023198Y0000 |
| Q128 | 960 0196 302 | Transistor KTA1268BL | J5001268B0050 |
| Q129,130 | 960 0005 202 | Transistor KTC3198Y | J5023198Y0000 |
| Q131,132 | 960 0196 302 | Transistor KTA1268BL | J5001268B0050 |
| Q133,134 | 960 0196 409 | Transistor 2SC1740SR | J5021740S0010 |
| Q136 | 963 0022 006 | Transistor DTC114YS | J6020114Y0050 |
| D101-113 | 963 0020 309 | Diode 1SS133 | K000013300520 |
| D114-119 | 963 0058 407 | Diode 1N4007 | K000400700520 |
| D120,121 | 963 0020 309 | Diode 1SS133 | K000013300520 |
| D122-125 | 963 0058 407 | Diode 1N4007 | K000400700520 |
| D126-129 | 963 0020 309 | Diode 1SS133 | K000013300520 |
| D130,131 | 963 0058 407 | Diode 1N4007 | K000400700520 |
| D132-135 | 963 0020 309 | Diode 1SS133 | K000013300520 |
| DB101,102 | 960 0197 107 | Diode KBPC604 | K047604000020 |
| DZ101,102 | 963 0046 202 | Zener diode MTZJ18B | K06018R044520 |
| DZ103,104 | 963 0047 405 | Zener diode MTZJ7.5B | K06007R544520 |
| DZ105 | 963 0058 708 | Zener diode MTZJ20B | K06020R044520 |
| DZ106 | 960 0095 500 | Zener diode MTZJ5.1B | K06005R144520 |
| DZ107-110 | 963 0047 502 | Zener diode MTZJ3.3B | K06003R344520 |
| **RESISTORS GROUP** | | | |
| R117,118 | 960 9004 301 | Metal film 47ohm 1/4W (NB) | C060047063050 |
| R127-130 | 244 2052 957 | Metal film 5.6kohm 1W (NB) | C060056265070 |
| R135,136 | 963 9003 068 | Metal film 4.7ohm 1/4W (NB) | C0604R7063050 |
| R137-140 | 244 2043 982 | Metal film 0.22ohm 1W (NB) | C060R22065070 |
| R141,142 | 963 9003 068 | Metal film 4.7ohm 1/4W (NB) | C0604R7063050 |
| R143-146 | 244 2043 982 | Metal film 0.22ohm 1W (NB) | C060R22065070 |
| R153-156 | 244 2043 937 | Metal oxide 10ohm 1W (NB) | C041010065060 |
| R162-164 | 244 2055 996 | Metal film 1.2kohm 1W (NB) | C060012265050 |
| R165 | 244 2043 937 | Metal oxide 10ohm 1W (NB) | C041010065060 |
| R166 | 244 2043 982 | Metal film 0.22ohm 1W (NB) | C060R22065050 |
| R173 | 963 9003 068 | Metal film 4.7ohm 1/4W (NB) | C0604R7063050 |
| R190,191 | 963 0045 203 | Winding 0.1ohm 5W | C144R10069110 |
| R195-197 | 244 2043 982 | Metal film 0.22ohm 1W (NB) | C060R22065050 |
| R201 | 244 2043 982 | Metal film 0.22ohm 1W (NB) | C060R22065050 |
| R208 | 963 9005 105 | Carbon film 68ohm 1/4W | C000068063520 |
| R209 | 963 0043 108 | Metal film 2.2Mohm 1/2W | C060022574000 |
| VR101,102 | 960 0091 601 | Semi fixed resistor 1kohm | C544102015130 |
| **CAPACITORS GROUP** | | | |
| C101,102 | | Electrolytic 22uF/50V | D040220087060 |
| C103,104 | | Electrolytic 10uF/50V | D040100087070 |
| C105,106 | 963 9005 118 | Ceramic 100pF/50V | D004101067060 |
| C107,108 | 963 9003 165 | Ceramic 220pF/500V | D009092212500 |
| C109,110 | | Electrolytic 47uF/25V | D040470084070 |
| C111,112 | 963 9005 121 | Ceramic 33pF/500V | D00033006D050 |
| C115,116 | 963 9005 134 | Ceramic 1200pF/50V | D004122287050 |
| C117,118 | | Electrolytic 47uF/50V | D040470087060 |
| C119,120 | 963 9003 084 | Ceramic 100pF/500V | D00410106D050 |
| C121,122 | | Electrolytic 10uF/50V | D040100087070 |
| C123,124 | 963 9003 084 | Ceramic 100pF/500V | D00410106D050 |
| C125,126 | 963 9004 517 | Ceramic 0.022uF/50V | D004223597050 |
| C127-130 | 963 9003 097 | Mylar film 0.1uF/250V | D02010407H080 |
| C135 | 963 9004 504 | Ceramic 0.01uF/50V | D004103097060 |
| C136 | | Electrolytic 2.2uF/50V | D0402R2087100 |
| C137 | 963 9004 504 | Ceramic 0.01uF/50V | D004103097060 |
| C138,139 | | Electrolytic 1uF/50V | D040010087080 |
| C140 | 963 9005 147 | Ceramic 0.1uF/25V | D004104594050 |
| C141 | | Electrolytic 220uF/6.3V | D040221081230 |
| C142 | 963 9005 147 | Ceramic 0.1uF/25V | D004104594050 |
| C143 | | Electrolytic 220uF/6.3V | D040221081230 |
| C144,145 | 963 9005 260 | Electrolytic 8200uF/63V | D040822088030 |
| C146-150 | 963 9003 097 | Mylar film 0.1uF/250V | D02010407H080 |
| C151 | | Electrolytic 1uF/50V | D040010087080 |
| C152 | 963 9005 163 | Electrolytic 1000uF/50V | D040102087080 |
| C153-155 | 963 0021 900 | Mylar film 0.047uF/100V | D02047306C060 |
| C156 | 960 9007 201 | Electrolytic 3300uF/35V | D040332085010 |
| C157 | 963 9003 123 | Electrolytic 1000uF/35V | D040102085040 |
| C158-161 | | Electrolytic 10uF/50V | D040100087070 |
| C162 | | Electrolytic 4.7uF/50V | D0404R7087100 |
| C164 | 963 9003 136 | Electrolytic 1000uF/25V | D040102084060 |
| C167,168 | | Electrolytic 1uF/50V | D040010087080 |
| ⚠ C169 | 963 9005 176 | Ceramic 4700pF/250V (AC) | D008472089010 |
| C170 | 963 9005 299 | Electrolytic 100uF/100V | D04010108C200 |
| C171,172 | 963 0021 900 | Mylar film 0.047uF/100V | D02047306C060 |
| C173 | 963 9005 286 | Electrolytic 3300uF/16V | D040332083100 |
| C174 | | Electrolytic 10uF/50V | D040100087070 |
| C176 | 963 0021 900 | Mylar film 0.047uF/100V | D02047306C060 |

| Ref. No. | Part No. | Part Name | Remarks |
|---|---|---|---|
| C301 | | Electrolytic 10uF/50V | D040100087050 |
| C302,303 | 963 9005 273 | Ceramic 220pF/50V | D004221067060 |
| C304 | | Electrolytic 10uF/50V | D040100087050 |
| C307,308 | | Electrolytic 220uF/6.3V | D040221081050 |
| C311,312 | 963 9005 118 | Ceramic 100pF/50V | D004101067060 |
| C313,314 | 963 9004 779 | Mylar film 0.024uF/50V | D020243167050 |
| C315,316 | 960 9008 695 | Mylar film 6800pF/100V | D02068206C060 |
| C317,318 | | Electrolytic 4.7uF/50V | D0404R7087250 |
| C319,320 | 963 9004 517 | Mylar film 0.022uF/50V | D004223597050 |
| C321-324 | | Electrolytic 47uF/25V | D040470084100 |
| C325,326 | 963 9005 118 | Ceramic 100pF/50V | D004101067060 |
| C327,328 | | Electrolytic 4.7uF/50V | D0404R7087250 |
| C329,330 | | Electrolytic 10uF/50V | D040100087050 |
| C331,332 | 963 9005 118 | Ceramic 100pF/50V | D004101067060 |
| C333,334 | | Electrolytic 4.7uF/50V | D0404R7087250 |
| C335,336 | 963 9005 118 | Ceramic 100pF/50V | D004101067060 |
| C337,338 | | Electrolytic 10uF/50V | D040100087050 |
| C339-344 | 963 9005 118 | Ceramic 100pF/50V | D004101067060 |
| C347-349 | | Electrolytic 1uF/50V | D040010087080 |

| OTHER PARTS GROUP | | | | Q'ty |
|---|---|---|---|---|
| CN600 | 963 0086 709 | 11P connector base | L101100031110 | 1 |
| CN601 | 963 0085 700 | 6P connector base | L101100030610 | 1 |
| CP101 | 960 0197 505 | 2P connector base | L108202000220 | 1 |
| CP102 | 960 0123 304 | 2P connector base | L104353280200 | 1 |
| CP103 | 963 0081 403 | 4P connector base | L104353280400 | 1 |
| CP104 | 960 0128 804 | 6P connector base | L102526700600 | 1 |
| CP107 | 960 0123 207 | 3P connector base | L102526700300 | 1 |
| CP608 | 963 0088 008 | 10P connector base | L101100041010 | 1 |
| CP609 | 963 0087 805 | 11P connector base | L101100041110 | 1 |
| CP907 | 963 0048 909 | 3P connector base | L101220030000 | 1 |
| ⚠ F101 | 960 0188 705 | Fuse 8A/125V | G650802121060 | 1 |
| ⚠ F102 | 963 0089 803 | Fuse 6.3A/125V | G650632121150 | 1 |
| F101A,B | 960 0005 804 | Fuse clip | G645000050010 | 2 |
| F102A,B | 960 0005 804 | Fuse clip | G645000050010 | 2 |
| GND101,102 | 960 9006 600 | GND terminal | 3790040876010 | 2 |
| JACK102 | 963 0074 009 | 8P speaker terminal | G61408103610A | 1 |
| JACK104 | 960 0181 508 | 2P AC outlet | G435204004010 | 1 |
| JACK301 | 960 0188 307 | 6P pin jack | G603060610010 | 1 |
| JACK302 | 960 0188 200 | 4P pin jack | G602040610000 | 1 |
| JACK303 | 960 0188 307 | 6P pin jack | G603060610010 | 1 |
| L101,102 | 963 0049 005 | Inductor 0.5uH | D330R50000000 | 2 |
| RLY101 | 960 0181 702 | Relay (G5PA-28) | G680240502020 | 1 |
| RLY102 | 963 0071 303 | Relay (RSB24S) | G680240202010 | 1 |
| RLY103 | 960 0181 702 | Relay (G5PA-28) | G680240502020 | 1 |

| Ref. No. | Part No. | Part Name | Remarks | Q'ty |
|---|---|---|---|---|
| RLY104 | 960 0181 605 | Relay (G5PA-1-8) | G680120502010 | 1 |
| ⚠ T101 | 960 0185 708 | Power trans. (Sub) | 8200280960010 | 1 |
| TP101,102 | 960 0161 405 | 3P connector base | L101530140310 | 2 |
| ★ | — | Heat sink | 2120043538050 | 1 |
| ★ | 963 0018 007 | Screw 3×8 (B)-Z | B020030081B10 | 2 |
| ★ | 963 0090 009 | Shield plate | 3070210146000 | 1 |

## FRONT P.W.B. UNIT ASS'Y

| Ref. No. | Part No. | Part Name | Remarks |
|---|---|---|---|
| **SEMICONDUCTORS GROUP** | | | |
| IC601 | 960 0133 307 | IC KIC9459F | J084945900010 |
| IC602 | 963 0043 506 | IC TC9184AP | J080918400010 |
| IC603 | 960 0179 604 | IC M62446FP | J084624460010 |
| IC604 | 960 0195 400 | IC PC74HC4094D | J040744094020 |
| IC605-610 | 960 0179 701 | IC NJM2068DD | J121206800000 |
| IC900 | 963 0090 106 | IC CXP82840-319Q | J020828403190 |
| Q600-607 | 960 0196 603 | Transistor KTC2874B | J502287400010 |
| Q610,611 | 963 0075 309 | Transistor DTA114ES | J6000114E0010 |
| Q612 | 963 0022 006 | Transistor DTC114YS | J6020114Y0050 |
| Q900 | 960 0196 409 | Transistor 2SC1740SR | J5021740S0010 |
| Q901 | 963 0075 503 | Transistor DTC144ES | J6020144E0010 |
| Q902-904 | 963 0081 306 | Transistor DTC114ES | J6020114E0010 |
| Q905,906 | 960 0196 409 | Transistor 2SC1740SR | J5021740S0010 |
| Q907 | 963 0081 209 | Transistor DTA144ES | J6000144E0010 |
| Q908,909 | 960 0196 603 | Transistor KTC2874B | J502287400010 |
| D601,602 | 963 0020 309 | Diode 1SS133 | K000013300520 |
| D603 | 963 0058 407 | Diode 1N4007 | K000400700520 |
| D900-902 | 963 0020 309 | Diode 1SS133 | K000013300520 |
| D903 | 963 0058 407 | Diode 1N4007 | K000400700520 |
| D904-907 | 963 0020 309 | Diode 1SS133 | K000013300520 |
| DZ900,901 | 960 0095 607 | Zener diode MTZJ5.6B | K06005R644520 |
| DZ902 | 963 0047 502 | Zener diode MTZJ3.3B | K06003R344520 |
| DZ903 | 960 0095 801 | Zener diode MTZJ6.8B | K06006R844520 |
| ZD900,901 | 960 0222 603 | Zener diode MTZJ7.5A | K06007R544530 |
| LED900-904 | 960 0197 204 | LED HL50RDRF4T | K500052015010 |
| FL900 | 960 0180 509 | FLT (16-ST-42GNK) | K530164200010 |
| **RESISTORS GROUP** | | | |
| R657,658 | 960 9003 700 | Metal film 10ohm 1/4W (NB) | C060010063050 |
| R714,715 | 244 2052 960 | Metal film 220ohm 1W (NB) | C060022165050 |
| R736 | 960 9004 301 | Metal film 47ohm 1/4W (NB) | C060047063050 |
| R912-914 | 963 9004 397 | Carbon chip 56kohm 1/16W | C20005636M160 |
| R926-928 | 963 9004 397 | Carbon chip 56kohm 1/16W | C20005636M160 |
| R930-932 | 963 9004 397 | Carbon chip 56kohm 1/16W | C20005636M160 |
| R936-949 | 963 9004 397 | Carbon chip 56kohm 1/16W | C20005636M160 |
| R951 | 963 9004 397 | Carbon chip 56kohm 1/16W | C20005636M160 |
| R953-955 | 963 9004 397 | Carbon chip 56kohm 1/16W | C20005636M160 |
| R958 | 963 9004 397 | Carbon chip 56kohm 1/16W | C20005636M160 |
| R960-966 | 963 9004 397 | Carbon chip 56kohm 1/16W | C20005636M160 |
| R968-970 | 963 9004 397 | Carbon chip 56kohm 1/16W | C20005636M160 |
| R973 | 963 9004 397 | Carbon chip 56kohm 1/16W | C20005636M160 |
| R977-980 | 963 9004 397 | Carbon chip 56kohm 1/16W | C20005636M160 |
| R982 | 963 9004 397 | Carbon chip 56kohm 1/16W | C20005636M160 |
| R985-987 | 963 9004 397 | Carbon chip 56kohm 1/16W | C20005636M160 |
| R990,991 | 963 9004 397 | Carbon chip 56kohm 1/16W | C20005636M160 |
| R993 | 963 9004 397 | Carbon chip 56kohm 1/16W | C20005636M160 |
| R995 | 963 9004 397 | Carbon chip 56kohm 1/16W | C20005636M160 |
| **CAPACITORS GROUP** | | | |
| C600,601 | | Electrolytic 4.7uF/50V | D0404R7087100 |
| C602,603 | 963 9005 192 | Mylar film 1500pF/100V | D02015206C060 |
| C604,605 | 963 9005 202 | Mylar film 0.1uF/50V | D020104167050 |
| C606,607 | | Electrolytic 47uF/25V | D040470084070 |
| C608,609 | 963 9004 504 | Ceramic 0.01uF/50V | D004103097060 |
| C610-612 | 963 9005 118 | Ceramic 100pF/50V | D004101067060 |
| C613-616 | | Electrolytic 10uF/50V | D040100087050 |
| C617,618 | 963 9005 215 | Ceramic 39pF/50V | D000390067050 |
| C619,620 | | Electrolytic 2.2uF/50V | D0402R208710C |
| C621,622 | 963 9005 118 | Ceramic 100pF/50V | D004101067060 |
| C623,624 | | Electrolytic 3.3uF/50V | D0403R308705C |
| C625,626 | 963 9005 228 | Ceramic 47pF/50V | D000470067050 |
| C627,628 | | Electrolytic 4.7uF/50V | D0404R7087100 |
| C629,630 | 960 9008 695 | Mylar film 6800pF/100V | D02068206C060 |
| C631,632 | 963 9003 409 | Mylar film 0.01uF/50V | D020103167050 |
| C633,634 | 963 9005 231 | Mylar film 0.056uF/50V | D020563067050 |
| C635,636 | 960 9003 302 | Mylar film 3300pF/50V | D020332167050 |
| C637,638 | | Electrolytic 10uF/50V | D040100087050 |
| C639,640 | 963 9000 155 | Mylar film 0.22uF/63V | D020224078060 |
| C641,642 | 963 9003 409 | Mylar film 0.01uF/50V | D020103167050 |
| C645 | | Electrolytic 10uF/50V | D040100087050 |
| C648 | | Electrolytic 10uF/50V | D040100087050 |
| C649-652 | | Electrolytic 4.7uF/50V | D0404R7087100 |
| C659,660 | | Electrolytic 3.3uF/50V | D0403R308705C |
| C661,662 | | Electrolytic 22uF/25V | D04022008405C |
| C663,664 | | Electrolytic 4.7uF/50V | D0404R7087100 |
| C665,666 | 963 9005 244 | Ceramic 150pF/50V | D000151067060 |
| C667,668 | | Electrolytic 10uF/50V | D040100087050 |
| C669,670 | | Electrolytic 4.7uF/50V | D0404R7087100 |
| C671,672 | 963 9005 244 | Ceramic 150pF/50V | D000151067060 |
| C673-675 | | Electrolytic 10uF/50V | D040100087050 |
| C676 | | Electrolytic 100uF/25V | D040101084060 |
| C677 | | Electrolytic 4.7uF/50V | D0404R7087100 |
| C678,679 | 963 9004 504 | Ceramic 0.01uF/50V | D004103097060 |
| C680 | | Electrolytic 100uF/25V | D040101084060 |
| C681,682 | | Electrolytic 4.7uF/50V | D0404R7087100 |
| C683 | 963 9005 118 | Ceramic 100pF/50V | D004101067060 |
| C684,685 | | Electrolytic 0.1uF/100V | D0400R108C00C |
| C686 | 963 9005 121 | Ceramic 33pF/50V | D000330067050 |
| C687 | 963 9005 118 | Ceramic 100pF/50V | D004101067060 |
| C688 | | Electrolytic 47uF/25V | D040470084070 |
| C689-698 | 963 9005 118 | Ceramic 100pF/50V | D004101067060 |
| C699,700 | 963 9005 257 | Mylar film 0.022uF/50V | D020223167050 |

| Ref. No. | Part No. | Part Name | Remarks |
|---|---|---|---|
| C701-712 | | Electrolytic 10uF/50V | D040100087050 |
| C713 | | Electrolytic 47uF/25V | D040470084070 |
| C714 | | Electrolytic 100uF/35V | D04010108505C |
| C900 | 963 0021 900 | Mylar film 0.047uF/100V | D02047306C060 |
| C901 | | Electrolytic 1uF/50V | D040010087080 |
| C902 | | Electrolytic 47uF/25V | D040470084070 |
| C903 | 963 0021 900 | Mylar film 0.047uF/100V | D02047306C060 |
| C904-909 | 963 9004 575 | Ceramic chip 100pF/50V | D010101167160 |
| C910 | 963 9004 708 | Ceramic chip 0.1uF/50V | D011104577160 |
| C911 | 963 0061 504 | Back up cap. 8200uF/5.5V | D040822080010 |
| C912 | 963 9004 708 | Ceramic chip 0.1uF/50V | D011104577160 |
| C913 | | Electrolytic 4.7uF/50V | D0404R7087100 |
| C914,915 | 963 9004 698 | Ceramic chip 0.01uF/50V | D011103777160 |
| C916 | 963 0021 900 | Mylar film 0.047uF/100V | D02047306C060 |
| C918 | 963 9004 504 | Ceramic 0.01uF/50V | D004103097060 |
| C919 | | Electrolytic 47uF/50V | D040470087060 |
| C920 | 963 0021 900 | Mylar film 0.047uF/100V | D02047306C060 |
| C932 | | Electrolytic 100uF/50V | D040101087060 |
| C933,934 | | Electrolytic 33uF/16V | D04033008305C |

| OTHER PARTS GROUP | | | | Q'ty |
|---|---|---|---|---|
| CN900 | 963 0089 706 | 3P connector cord (L=100) | L000101030070 | 1 |
| CP600 | 963 0087 805 | 11P connector base | L101100041110 | 1 |
| CP601 | 963 0087 009 | 6P connector base | L101100040610 | 1 |
| CP602 | 960 0128 700 | 13P connector base | L101353361310 | 1 |
| CP603 | 963 0088 008 | 10P connector base | L101100041010 | 1 |
| CP604 | 963 0071 206 | 23P FFC connector base | L131520452345 | 1 |
| CP605 | 963 0087 805 | 11P connector base | L101100041110 | 1 |
| CP607,608 | 963 0087 805 | 11P connector base | L101100041110 | 2 |
| CP901 | 963 0071 109 | 23P FFC connector base (L) | L131520442345 | 1 |
| CP902 | 963 0049 102 | 3P connector base (L) | L102526803010 | 1 |
| L900 | 960 0128 008 | Inductor 100uH | D330101001020 | 1 |
| REM900 | 960 0181 100 | Remocon sensor NJL64H380A | E940643800000 | 1 |
| RLY600 | 963 0071 303 | Relay (RSB24S) | G680240202010 | 1 |
| SW900-923 | 963 0045 708 | Tact switch | G180000270010 | 24 |
| SW924 | 960 0181 207 | Rotary encoder (EC16B2420431) | G121162420400 | 1 |
| XTAL900 | 960 0112 001 | Ceramic resonator | CST10.0MGW-TF01<br>E830100000050 | 1 |
| ★ | 960 0184 408 | FLT holder | 4320200026000 | 1 |

## TUNER P.W.B. UNIT ASS'Y

| Ref. No. | Part No. | Part Name | Remarks |
|---|---|---|---|
| **SEMICONDUCTORS GROUP** | | | |
| IC401 | 963 0043 700 | IC LC72131 | J120721310030 |
| IC402 | 963 0043 904 | IC LA1266 | J124126600010 |
| IC403 | 963 0044 000 | IC LA3401 | J124340100010 |
| IC501 | 960 0175 200 | IC BA7625 | J171762500000 |
| IC502 | 960 0174 104 | IC CXA1511M | J030151100010 |
| Q401 | 963 0058 300 | Transistor KTC3880S | J5223880O0210 |
| Q402 | 963 0079 305 | Transistor DTA114YK | J5200114Y0210 |
| Q403,404 | 963 0058 203 | Transistor DTA114EK | J5200114E0210 |
| Q405,406 | 960 0196 603 | Transistor KTC2874B | J502287400010 |
| Q407 | 963 0024 208 | Transistor DTC114YK | J5220114Y0210 |
| Q408 | 963 0058 203 | Transistor DTA114EK | J5200114E0210 |
| Q502-505 | 960 0005 105 | Transistor KTA1266Y | J5001266Y0050 |
| Q510,511 | 963 0022 006 | Transistor DTC114YS | J6020114Y0050 |
| Q512 | 963 0081 209 | Transistor DTA144ES | J6000144E0010 |
| Q550 | 963 0075 309 | Transistor DTA114ES | J6000114E0010 |
| D403 | 960 0197 000 | Diode KDS160 | K005016000010 |
| D404 | 963 0020 309 | Diode 1SS133 | K000013300520 |
| D405,406 | 960 0197 000 | Diode KDS160 | K005016000010 |
| D501-504 | 963 0020 309 | Diode 1SS133 | K000013300520 |
| D550 | 963 0058 407 | Diode 1N4007 | K000400700520 |
| D551 | 963 0020 309 | Diode 1SS133 | K000013300520 |
| D552 | 963 0058 407 | Diode 1N4007 | K000400700520 |
| DZ401 | 960 0095 500 | Zener diode MTZJ5.1B | K06005R144520 |
| DZ501 | 960 0095 704 | Zener diode MTZJ6.2B | K06006R244520 |
| **RESISTORS GROUP** | | | |
| R401 | 963 9004 821 | Carbon chip 10ohm 1/16W | C20001006M160 |
| R403 | 963 9004 339 | Carbon chip 470ohm 1/16W | C20004716M160 |
| R404 | 963 9004 083 | Carbon chip 100kohm 1/16W | C20001046M160 |
| R405 | 960 9003 807 | Metal film 100ohm 1/4W (NB) | C060010163050 |
| R406 | 963 9004 342 | Carbon chip 4.7kohm 1/16W | C20004726M160 |
| R407 | 963 9004 339 | Carbon chip 470ohm 1/16W | C20004716M160 |
| R408 | 963 9004 119 | Carbon chip 1.2kohm 1/16W | C20001226M160 |
| R409 | 963 9004 339 | Carbon chip 470ohm 1/16W | C20004716M160 |
| R411 | | Carbon chip 68kohm 1/16W | C20006836M160 |
| R412 | 963 9004 834 | Carbon chip 5.6kohm 1/16W | C20005626M160 |
| R413 | 960 9006 503 | Metal film 220ohm 1/4W (NB) | C060022163050 |
| R414 | 963 9004 216 | Carbon chip 2.2kohm 1/16W | C20002226M160 |
| R415 | 963 9003 398 | Carbon chip 1kohm 1/16W | C20001026M160 |
| R416 | | Metal film 680ohm 1/4W (NB) | C060068163050 |
| R417 | 963 9003 398 | Carbon chip 1kohm 1/16W | C20001026M160 |
| R418 | 963 9004 274 | Carbon chip 33kohm 1/16W | C20003336M160 |
| R420 | 963 9004 847 | Carbon chip 3.3kohm 1/16W | C20003326M160 |
| R426,427 | 963 9004 070 | Carbon chip 10kohm 1/16W | C20001036M160 |

| Ref. No. | Part No. | Part Name | Remarks |
|---|---|---|---|
| R428 | 963 9004 847 | Carbon chip 3.3kohm 1/16W | C20003326M160 |
| R429 | 963 9004 850 | Carbon chip 82ohm 1/16W | C20008206M160 |
| R430 | 963 9003 807 | Metal film 100ohm 1/4W (NB) | C060010163050 |
| R431 | 963 9004 371 | Carbon chip 5.1kohm 1/16W | C20005126M160 |
| R432 | 963 9004 070 | Carbon chip 10kohm 1/16W | C20001036M160 |
| R434 | 963 9003 807 | Metal film 100ohm 1/4W (NB) | C060010163050 |
| R435 | 963 9004 847 | Carbon chip 3.3kohm 1/16W | C20003326M160 |
| R437-439 | 963 9004 083 | Carbon chip 100kohm 1/16W | C20001046M160 |
| R440,441 | 963 9004 863 | Carbon chip 120kohm 1/16W | C20001246M160 |
| R442,443 | 963 9004 847 | Carbon chip 3.3kohm 1/16W | C20003326M160 |
| R444,445 | 963 9004 481 | Carbon chip 8.2kohm 1/16W | C20008226M160 |
| R448 | 963 9004 216 | Carbon chip 2.2kohm 1/16W | C20002226M160 |
| R455 | 963 9004 876 | Carbon chip 330ohm 1/16W | C20003316M160 |
| R456 | 963 9003 385 | Carbon chip 100ohm 1/16W | C20001016M160 |
| R458,459 | 963 9004 342 | Carbon chip 4.7kohm 1/16W | C20004726M160 |
| R460-464 | 963 9004 083 | Carbon chip 100kohm 1/16W | C20001046M160 |
| R465-469 | 963 9004 203 | Carbon chip 220ohm 1/16W | C20002216M160 |
| R470 | 963 9003 398 | Carbon chip 1kohm 1/16W | C20001026M160 |
| R471VT | 963 9004 203 | Carbon chip 220ohm 1/16W | C20002216M160 |
| R473 | 963 9003 372 | Carbon chip 0ohm 1/16W | C20000006M160 |
| R475 | 963 9004 122 | Carbon chip 12kohm 1/16W | C20001236M160 |
| R476 | 963 9004 397 | Carbon chip 56kohm 1/16W | C20005636M160 |
| R478 | 963 9004 070 | Carbon chip 10kohm 1/16W | C20001036M160 |
| R479 | 963 9004 083 | Carbon chip 100kohm 1/16W | C20001046M160 |
| R491 | 963 9004 229 | Carbon chip 22kohm 1/16W | C20002236M160 |
| R1024,1025 | 963 0048 006 | Metal film 330ohm 2W | C060033166520 |
| VR401 | 960 0096 606 | Semi fixed resistor 20kohm | C541203115000 |
| VR402 | 963 0056 205 | Semi fixed resistor 50kohm | C541503115000 |
| VR403 | 963 0052 005 | Semi fixed resistor 200kohm | C541204115000 |
| **CAPACITORS GROUP** | | | |
| C401,402 | 963 9004 685 | Ceramic chip 1000pF/50V | D011102777160 |
| C403 | 963 9004 737 | Ceramic chip 0.022uF/25V | D011223777160 |
| C404 | 963 9004 892 | Ceramic 2pF/50V | D000020007050 |
| C405 | 963 9004 737 | Ceramic chip 0.022uF/25V | D011223777160 |
| C406 | 963 9004 902 | Ceramic chip 18pF/50V | D010180167160 |
| C408 | 960 9004 709 | Ceramic 6pF/50V | D000060007050 |
| C409 | 963 9004 520 | Ceramic 100pF/50V | D005101177520 |
| C410 | 963 9004 915 | Ceramic 470pF/50V | D005471277520 |
| C411 | 963 9004 685 | Ceramic chip 1000pF/50V | D011102777160 |
| C412 | 963 9004 737 | Ceramic chip 0.022uF/25V | D011223777160 |
| C413 | 963 9004 575 | Ceramic chip 100pF/50V | D010101167160 |
| C414 | | Electrolytic 2.2uF/50V | D0402R2087100 |
| C415 | | Electrolytic 47uF/25V | D040470084070 |
| C416 | | Electrolytic 10uF/50V | D040100087050 |
| C417 | | Electrolytic 100uF/16V | D040101083100 |
| C418 | 963 9004 698 | Ceramic chip 0.01uF/50V | D011103777160 |
| C419 | | Electrolytic 10uF/50V | D040100087050 |
| C420 | 963 9004 591 | Ceramic chip 22pF/50V | D010220167160 |
| C421 | 963 9004 928 | Ceramic chip 24pF/50V | D010240167200 |

| Ref. No. | Part No. | Part Name | Remarks |
|---|---|---|---|
| C422 | 963 9004 656 | Ceramic chip 470pF/50V | D010471167160 |
| C423,424 | 963 9004 737 | Ceramic chip 0.022uF/25V | D011223777160 |
| C425 | | Electrolytic 4.7uF/50V | D0404R7087100 |
| C426 | | Electrolytic 3.3uF/50V | D0403R3087100 |
| C427 | | Electrolytic 4.7uF/50V | D0404R7087100 |
| C428 | 963 9004 737 | Ceramic chip 0.022uF/25V | D011223777160 |
| C430 | 963 0021 900 | Mylar film 0.047uF/100V | D02047306C060 |
| C431 | 963 9004 627 | Ceramic chip 33pF/50V | D010330167160 |
| C432 | | Electrolytic 47uF/25V | D040470084070 |
| C433 | 963 9004 737 | Ceramic chip 0.022uF/25V | D011223777160 |
| C434 | | Electrolytic 1uF/50V | D040010087080 |
| C435,436 | 963 9004 737 | Ceramic chip 0.022uF/25V | D011223777160 |
| C437 | | Electrolytic 47uF/25V | D040470084070 |
| C438 | | Electrolytic 1uF/50V | D040010087080 |
| C439 | | Electrolytic 0.22uF/50V | D040R22087100 |
| C440,441 | | Electrolytic 1uF/50V | D040010087080 |
| C442 | | Electrolytic 2.2uF/50V | D0402R2087100 |
| C443 | | Electrolytic 10uF/50V | D040100087050 |
| C444 | | Electrolytic 4.7uF/50V | D0404R7087100 |
| C445 | | Electrolytic 10uF/50V | D040100087050 |
| C446,447 | 963 9005 053 | Ceramic 270pF/50V | D004271277050 |
| C448,449 | 963 9004 960 | Ceramic 470pF/50V | D004471067060 |
| C450,451 | | Electrolytic 10uF/50V | D040100087050 |
| C452 | 963 9004 575 | Ceramic chip 100pF/50V | D010101167160 |
| C453 | 963 9004 614 | Ceramic chip 27pF/50V | D010270167160 |
| C454,455 | 963 9004 575 | Ceramic chip 100pF/50V | D010101167160 |
| C456 | 963 9004 672 | Ceramic chip 680pF/50V | D010681167160 |
| C457,458 | 963 9004 575 | Ceramic chip 100pF/50V | D010101167160 |
| C459 | | Electrolytic 1uF/50V | D040010087080 |
| C461 | 963 9004 591 | Ceramic chip 22pF/50V | D010220167160 |
| C463 | 963 9004 782 | Mylar film 0.056uF/100V | D02056306C060 |
| C464 | 963 9004 973 | Ceramic 3pF/50V | D000030007050 |
| C465-469 | | Electrolytic 10uF/50V | D040100087050 |
| C470 | | Electrolytic 1uF/50V | D040010087080 |
| C471VT | | Electrolytic 1uF/50V | D040010087080 |
| C472VT | 963 9004 753 | Ceramic chip 0.047uF/50V | D011473597160 |
| C501-503 | | Electrolytic 4.7uF/50V | D0404R7087100 |
| C504,505 | | Electrolytic 470uF/10V | D040471082060 |
| C506-508 | | Electrolytic 10uF/50V | D040100087050 |
| C509 | | Electrolytic 100uF/10V | D040101082060 |
| C510 | | Electrolytic 470uF/10V | D040471082060 |
| C511 | | Electrolytic 1uF/50V | D040010087080 |
| C512 | 963 9004 517 | Ceramic 0.022uF/50V | D004223597050 |
| C513 | | Electrolytic 47uF/25V | D040470084070 |
| C514 | 960 9008 653 | Mylar film 0.012uF/100V | D02012306C060 |
| C515 | | Electrolytic 1uF/50V | D040010087080 |
| C516 | 960 9008 653 | Mylar film 0.012uF/100V | D02012306C060 |
| C517 | 963 9005 118 | Ceramic 100pF/50V | D004101067060 |
| C518 | 963 9004 504 | Ceramic 0.01uF/50V | D004103097060 |
| C519 | | Electrolytic 1uF/50V | D040010087080 |
| C520 | | Electrolytic 470uF/10V | D040471082060 |

| Ref. No. | Part No. | Part Name | Remarks | |
|---|---|---|---|---|
| C521 | 963 9004 504 | Ceramic 0.01uF/50V | D004103097060 | |
| C550 | | Electrolytic 0.1uF/50V | D040R10087070 | |
| C551 | | Electrolytic 100uF/25V | D040101084060 | |
| C928,929 | 963 9004 533 | Ceramic 1000pF/50V | D005102177530 | |
| C930 | 960 9003 108 | Ceramic 0.022uF/25V | D005223594520 | |
| C931 | | Electrolytic 1uF/50V | D040010087080 | |
| **OTHER PARTS GROUP** | | | | **Q'ty** |
| CF401,402 | 960 0187 104 | Ceramic filter | SFE10.7MA8<br>E430107000140 | 2 |
| CF403 | 960 0187 609 | Ceramic resonator | BFU450C<br>E830450000070 | 1 |
| CN602 | 960 0129 706 | 13P connector base | L101352371310 | 1 |
| CN603 | 963 0085 409 | 10P connector base | L101100031010 | 1 |
| CN605 | 963 0086 709 | 11P connector base | L101100031110 | 1 |
| CN606,607 | 963 0086 709 | 11P connector base | L101100031110 | 2 |
| CN608 | 963 0085 409 | 10P connector base | L101100031010 | 1 |
| CN609 | 963 0086 709 | 11P connector base | L101100031110 | 1 |
| CN902 | 963 0049 908 | 3P connector base | L101220030010 | 1 |
| CN907 | 963 0089 308 | 3P connector cord (L=400) | L000401030020 | 1 |
| CP900 | 963 0086 000 | 2P connector cord (L=80) | L000800020060 | 1 |
| CP906 | 963 0048 909 | 3P connector base | L101220030000 | 1 |
| FE401 | 960 0187 706 | Tuner pack | E900401010020 | 1 |
| G401 | — | 1P Wire (L=80) | 8410800010010 | 1 |
| G901 | — | 1P Wire (L=80) | 8410800010010 | 1 |
| HAJACK900 | 960 0187 502 | Headphone jack (D6.5) | G402038400031 | 1 |
| J401-404 | 963 9003 369 | Carbon chip 0ohm 1/8W | C200000061300 | 4 |
| J407 | 963 9003 369 | Carbon chip 0ohm 1/8W | C200000061300 | 1 |
| J409 | 963 9003 369 | Carbon chip 0ohm 1/8W | C200000061300 | 1 |
| JACK401,402 | 960 0188 200 | 4P pin jack | G602040610000 | 1 |
| JACK403 | 960 0194 508 | 1P pin jack | G600010003020 | 1 |
| JACK404 | 963 0052 403 | 3P antenna terminal | G593021068010 | 1 |
| JACK501,502 | 960 0194 605 | 2P pin jack | G601020163010 | 2 |
| JACK503 | 960 0188 404 | 3P pin jack | G606030164020 | 1 |
| JACK504 | 963 0071 002 | Mini jack | G401065020000 | 1 |
| L401,402 | 963 0052 102 | Inductor 1uH | D3301R0001020 | 2 |
| L403 | 963 0056 409 | MW IFT (RBW07VB-K5025) | D950500500010 | 1 |
| SW926 | 963 0045 708 | Tact switch | G180000270010 | 1 |
| SW928 | 963 0045 708 | Tact switch | G180000270010 | 1 |
| SW929 | 960 0176 209 | Push switch | G000122000010 | 1 |
| SW931 | 963 0045 708 | Tact switch | G180000270010 | 1 |
| SW933 | 963 0045 708 | Tact switch | G180000270010 | 1 |

| Ref. No. | Part No. | Part Name | Remarks | Q'ty |
|---|---|---|---|---|
| SW935 | 963 0045 708 | Tact switch | G180000270010 | 1 |
| SW937,938 | 963 0045 708 | Tact switch | G180000270010 | 2 |
| T401 | 960 0186 600 | MW IFT (PCFMAF-270) | D950500200000 | 1 |
| T402 | 960 0007 349 | FM DET trans. | D951561100000 | 1 |
| T403 | 960 0007 352 | FM DET trans. | D951561200000 | 1 |
| X401 | 960 0187 405 | Crystal 7.2MHz | E8007R2000071 | 1 |
| X402 | 963 0043 302 | Ceramic resonator | CSB456F11<br>E830456000050 | 1 |
| ★ | 963 0054 003 | Shield cover | 3070210056000 | 1 |
| ★ | 963 0088 406 | Earth plate C | 4470210206000 | 1 |
| ★ | 960 0184 000 | Screw bracket | 4010210196000 | 2 |

## EXPLODED VIEW

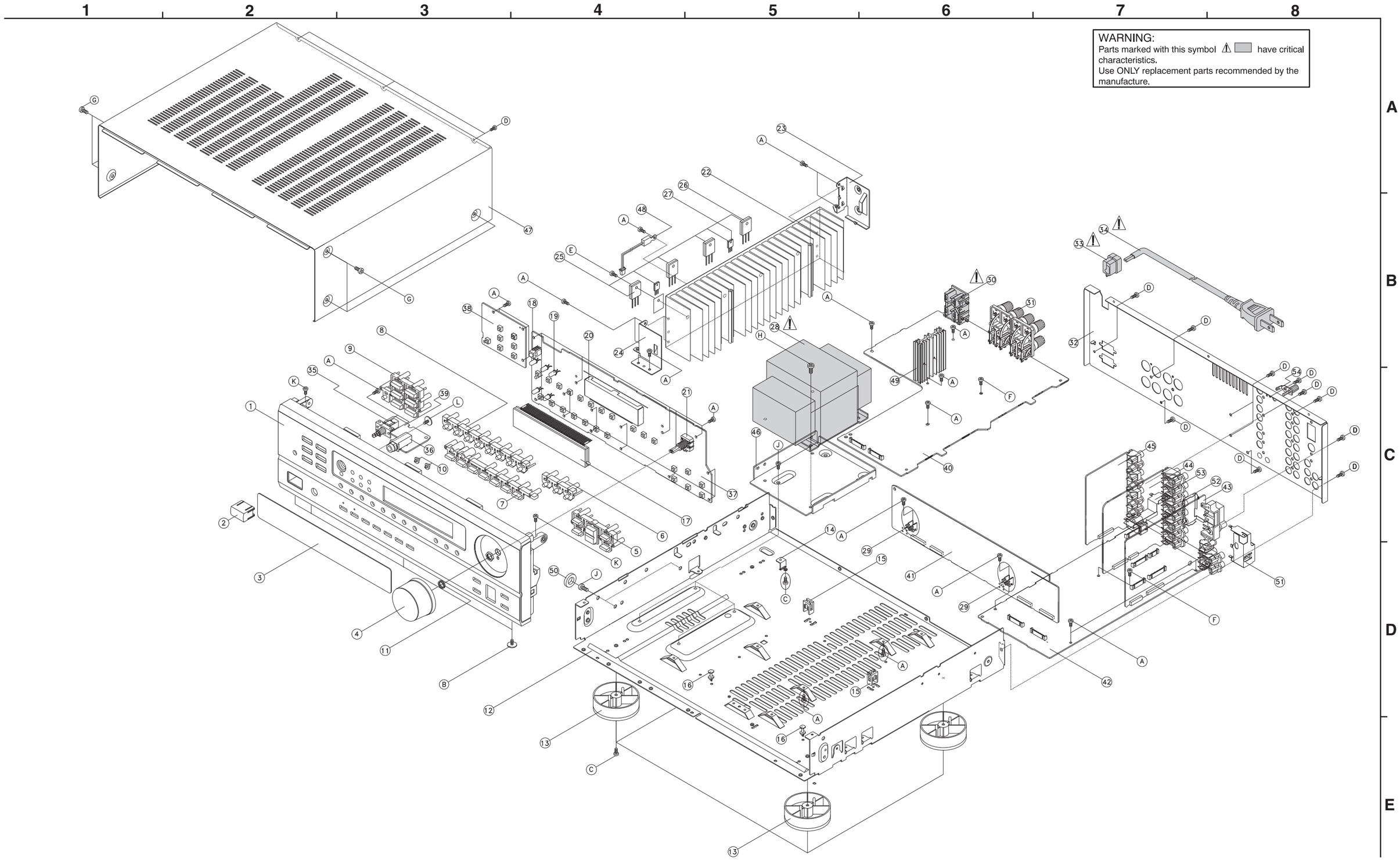

# PARTS LIST OF EXPLODED VIEW

| Ref. No. | Part No. | Part Name | Remarks | Q'ty |
|---|---|---|---|---|
| — | 963 0080 200 | Main P.W.B. unit Ass'y | 7025HK0010010 | 1 |
| 40 | | Main P.W.B. unit | | |
| 44 | | Input P.W.B. unit | | |
| — | 963 0080 307 | Front P.W.B. unit Ass'y | 7025HK0010011 | 1 |
| 37 | | Front P.W.B. unit | | |
| 42 | | Volume P.W.B. unit | | |
| — | 963 0080 404 | Tuner P.W.B. unit Ass'y | 7025HK0010012 | 1 |
| 38 | | Switch P.W.B. unit | | |
| 39 | | Power SW/HP P.W.B. unit | | |
| 41 | | Connector P.W.B. unit | | |
| 43 | | Tuner P.W.B. unit | | |
| 45 | | Video P.W.B. unit | | |
| 1 | 963 0076 201 | Front panel | 3067210651200Z | 1 |
| 2 | 960 0185 009 | Power button | 5090210201000Z | 1 |
| 3 | 963 0076 609 | Display window | 5077210262030 | 1 |
| 4 | 963 0054 906 | Volume knob | 5087210191010Z | 1 |
| 5 | 963 0053 703 | 5key button | 5097210471000Z | 1 |
| 6 | 963 0053 606 | 3key button | 5090210511000Z | 1 |
| 7 | 963 0089 900 | 7(A)key button | 5090210491201Z | 1 |
| 8 | 963 0053 509 | 8key button | 5090210501000Z | 1 |
| 9 | 963 0076 803 | 7(B)key button | 5090211331000Z | 1 |
| 10 | 960 0191 417 | LED lens | 3710210043001 | 2 |
| 11 | 963 0051 006 | Knob spring | 3720210116000 | 1 |
| 12 | 960 0198 229 | Main chassis | 3200210146301 | 1 |
| 13 | 960 0183 904 | Foot Ass'y | 400802006101C | 4 |
| 14 | 960 0184 107 | Support bracket | 4010210206000 | 1 |
| 15 | 960 0003 301 | P.W.B. support | 4070001601010 | 2 |
| 16 | 963 0051 103 | Card spacer | 4300210062000 | 2 |
| 17 | 960 0180 509 | FLT (16-ST-42GNK) | FL900 | 1 |
| | | | K530164200010 | |
| 18 | 960 0181 100 | Remocon sensor NJL64H380A | REM900 | 1 |
| | | | E940643800000 | |
| 19 | 960 0197 204 | LED HL50RDRF4T | LED900-904 | 5 |
| | | | K500052015010 | |
| 20 | 960 0184 408 | FLT holder | 4320200026000 | 1 |
| 21 | 960 0181 207 | Rotary encoder (EC16B2420431) | SW924 | 1 |
| | | | G121162420400 | |
| 22 | — | Heat sink (main) | 2120210298000Z | 1 |
| 23 | 960 0184 204 | Heat sink bracket B | 4010210386000 | 1 |
| 24 | 960 0184 301 | Heat sink bracket F | 4010210396000 | 1 |
| 25 | 963 0044 107 | Transistor 2SB1560Y | Q113,114 | 2 |
| | | | J5011560Y0000 | |
| 26 | 963 0044 204 | Transistor 2SD2390Y | Q111,112 | 2 |
| | | | J5032390Y0000 | |
| 27 | 963 0058 106 | Transistor 2SD947F | Q109,110 | 2 |
| | | | J503947F00000 | |
| ⚠ 28 | 963 0080 501 | Power trans. | 8200858680020 | 1 |
| 29 | 960 0184 000 | Screw bracket | 4010210196000 | 2 |
| ⚠ 30 | 960 0181 508 | 2P AC outlet | JACK104 | 1 |
| | | | G435204004010 | |

| Ref. No. | Part No. | Part Name | Remarks | Q'ty |
|---|---|---|---|---|
| 31 | 963 0074 009 | 8P speaker terminal | JACK102 | 1 |
| | | | G61408103610A | |
| 32 | 963 0076 405 | Back panel | 3207210766500 | 1 |
| ⚠ 33 | 960 0192 403 | Cord bush | 4380210002000 | 1 |
| ⚠ 34 | 960 0166 400 | AC cord | L068020030010 | 1 |
| 35 | 960 0176 209 | Push switch | SW929 | 1 |
| | | | G000122000010 | |
| 36 | 960 0187 502 | Headphone jack (D6.5) | G402038400031 | 1 |
| 46 | 963 0072 205 | Trans bracket | 4010210466001 | 1 |
| 47 | 963 0053 017 | Top cover | 3000210096001 | 1 |
| 48 | 960 0187 900 | Posistor P43T7D330BW16 | F320161001020 | 1 |
| 49 | — | Heat sink | 2120043538050 | 1 |
| 50 | 963 0072 302 | Rubber cushion | 4050210165000 | 2 |
| 51 | 963 0054 003 | Shield cover | 3070210056000 | 1 |
| 52 | 963 0088 406 | Earth plate C | 4470210206000 | 1 |
| 53 | 960 0090 009 | Shield plate | 3070210146000 | 1 |
| 54 | 960 0183 807 | Terminal | 3790000090000 | 1 |
| ★ 55 | 963 0089 104 | Rubber sheet | 1210210235000 | 3 |
| ★ 56 | 960 0155 301 | Wire clamper | 4330040343010 | 4 |
| ★ 57 | 963 0054 207 | Fuse caution label | 5527042410020 | 1 |
| ★ 58 | 963 0089 007 | FFC cable | CP901 | 1 |
| | | | L301171230010 | |
| **SCREWS** | | | | |
| A | 963 0018 007 | Screw 3×8 (B)-Z | B020030081B10 | 44 |
| B | 960 9008 527 | Screw 3×8 (B) W-B | 1500001456020 | 4 |
| C | 963 0048 200 | Screw 3×10 (B)-Z | B020030101B10 | 5 |
| D | 960 0108 714 | Screw 3×10 (B)-B | B020030103B11 | 28 |
| E | 963 9004 009 | Screw 3×14 (P) SW W-Z | B018230141H10 | 6 |
| F | 963 0018 104 | Screw 3×17 (B)-Z | B020030171B10 | 2 |
| G | 963 0048 307 | Screw 4×8 (B)-B | 1500040083B10 | 6 |
| H | 960 9008 417 | Screw 4×8 (P) SW W-Z | B028940081B10 | 4 |
| J | 963 9004 025 | Screw 4×6 (S)-Z | B020740061B10 | 6 |
| K | 963 9004 038 | Screw 3×8 (B) W-Z | 1500001206010 | 2 |
| L | 960 9008 420 | Screw 3×8 (B) W-Z | 1500001456010 | 1 |

## PACKING VIEW

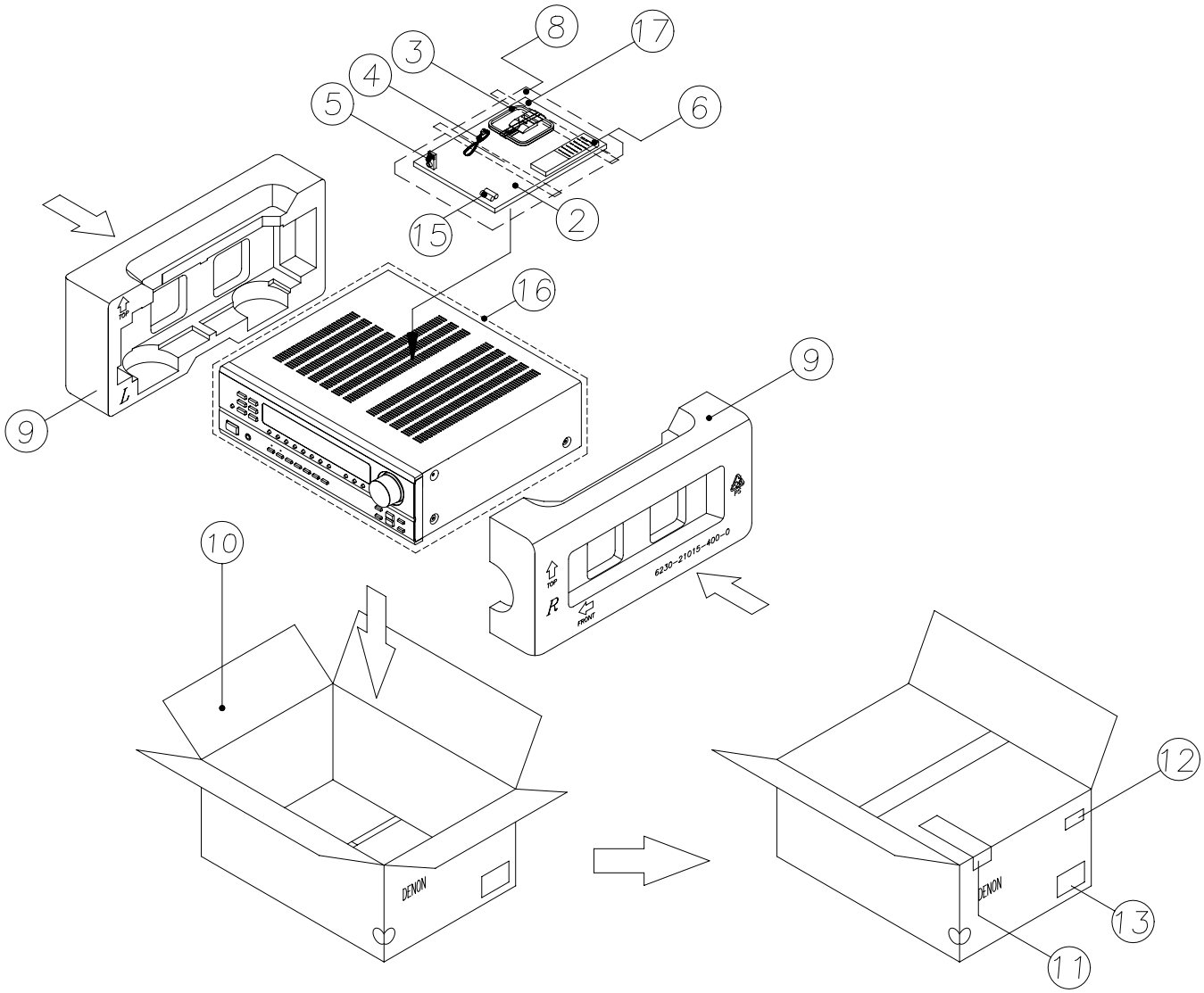


## PARTS LIST OF PACKING & ACCESSORIES

| Ref. No. | Part No. | Part Name | Remarks | Q'ty |
|---|---|---|---|---|
| 2 | 963 0080 006 | Instruction manual | 5707210170270 | 1 |
| 3 | 963 0052 306 | AM loop antenna | E605010090000 | 1 |
| 4 | 963 0081 102 | FM antenna wire | E605010010000 | 1 |
| 5 | 963 0052 704 | FM antenna adapter | L109000180010 | 1 |
| 6 | 963 0081 908 | Remote control unit RC-894 | 8300894000010 | 1 |
| 8 | 963 0045 106 | Poly bag | 6330000240000 | 1 |
| 9 | 963 0193 101 | Cushion (L/R) | 6230210154001 | 1 |

| Ref. No. | Part No. | Part Name | Remarks | Q'ty |
|---|---|---|---|---|
| 10 | 963 0080 103 | Carton case | 6007210310030 | 1 |
| 11 | — | DEL warranty home | 5777001610020 | 1 |
| 12 | — | UPC label | 5507002330110 | 1 |
| 13 | — | Control label | 5500014920010 | 2 |
| 15 | — | Battery (R03/AAA) | G670011R50000 | 2 |
| 16 | 960 0185 601 | Set poly bag | 6330210019000 | 1 |
| 17 | — | S.S. list (EX) | 5777001620012 | 1 |

## WIRING DIAGRAM

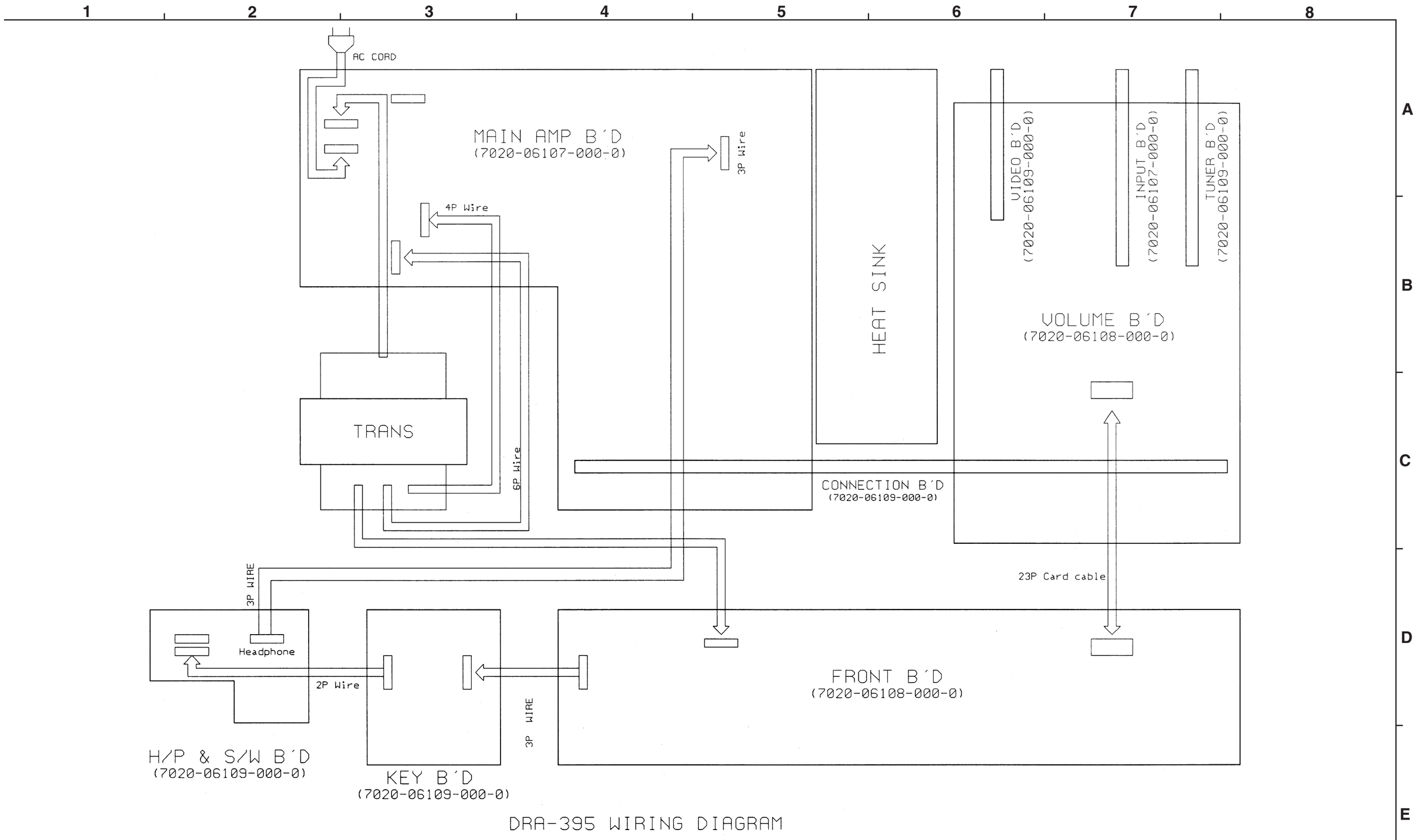


DRA-395 WIRING DIAGRAM

## SCHEMATIC DIAGRAMS(1/6)

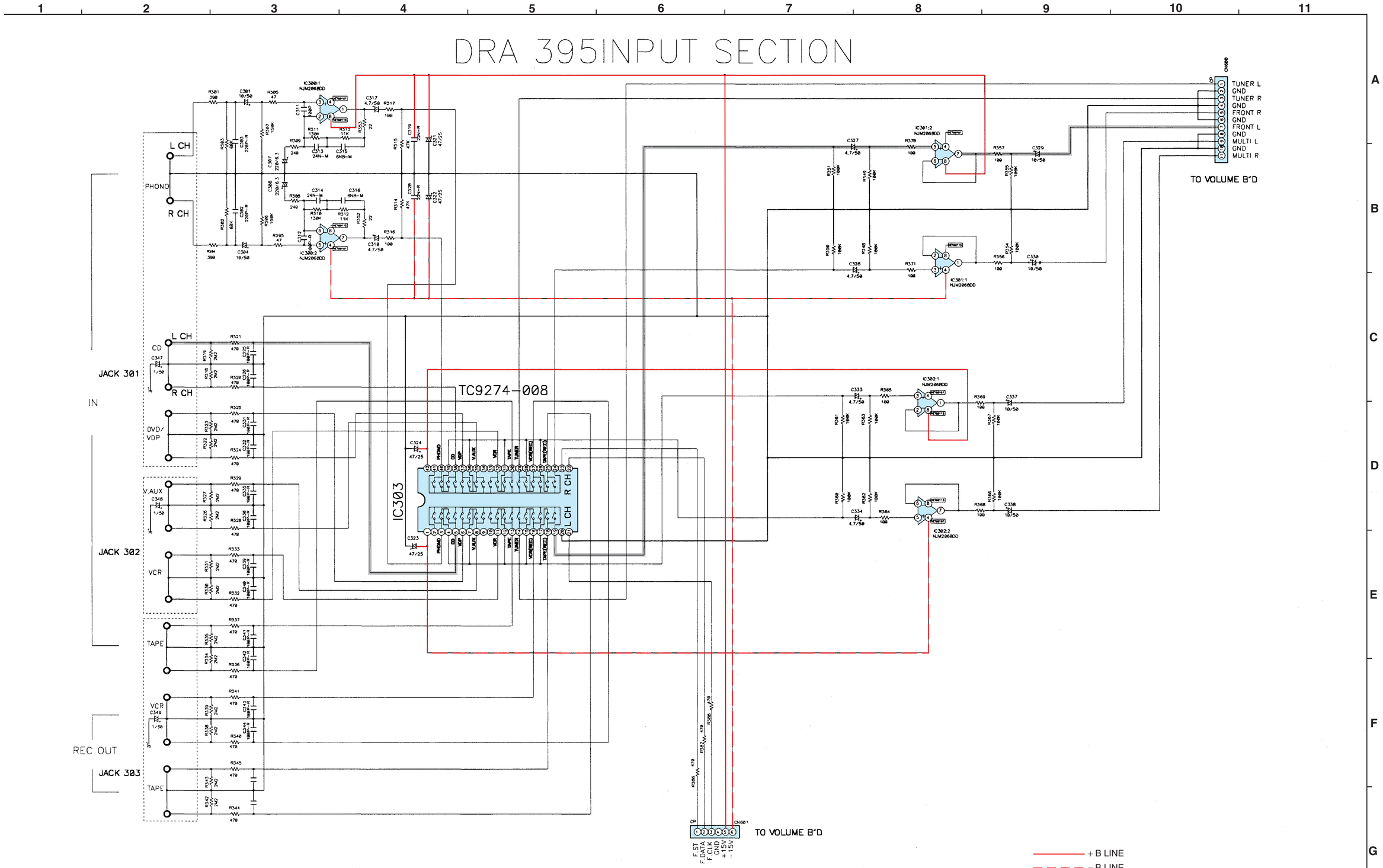


NOTICE
ALL RESISTANCE VALUES IN OHM. k=1,000 OHM M=1,000,000 OHM
ALL CAPACITANCE VALUES IN MICRO FARAD. P=MICRO-MICRO FARAD
EACH VOLTAGE AND CURRENT ARE MEASUERD AT MO SIGNAL INPUT CONDITION.
CIRCUIT AND PARTS ARE SUBJECT TO CHANGE WITHOUT PRIOR NOTICE.

WARNING:
Parts marked with this symbol ⚠ have critical characteristics.
Use ONLY replacement parts recommended by the manufacture.

CAUTION:
Before returning the unit to the customer, make sure you make either (1) a leakage current check or (2) a line to chassis resistance check. If the leakage current exceeds 0.5 milliamps, or if the resistance from chassis to either side of the power card is less than 460kohms, the unit is defective.

WARNING:
DO NOT return the unit to the customer until the problem is located and corrected.

SCHEMATIC DIAGRAMS(1/6)
INPUT UNIT

## SCHEMATIC DIAGRAMS(1/6)

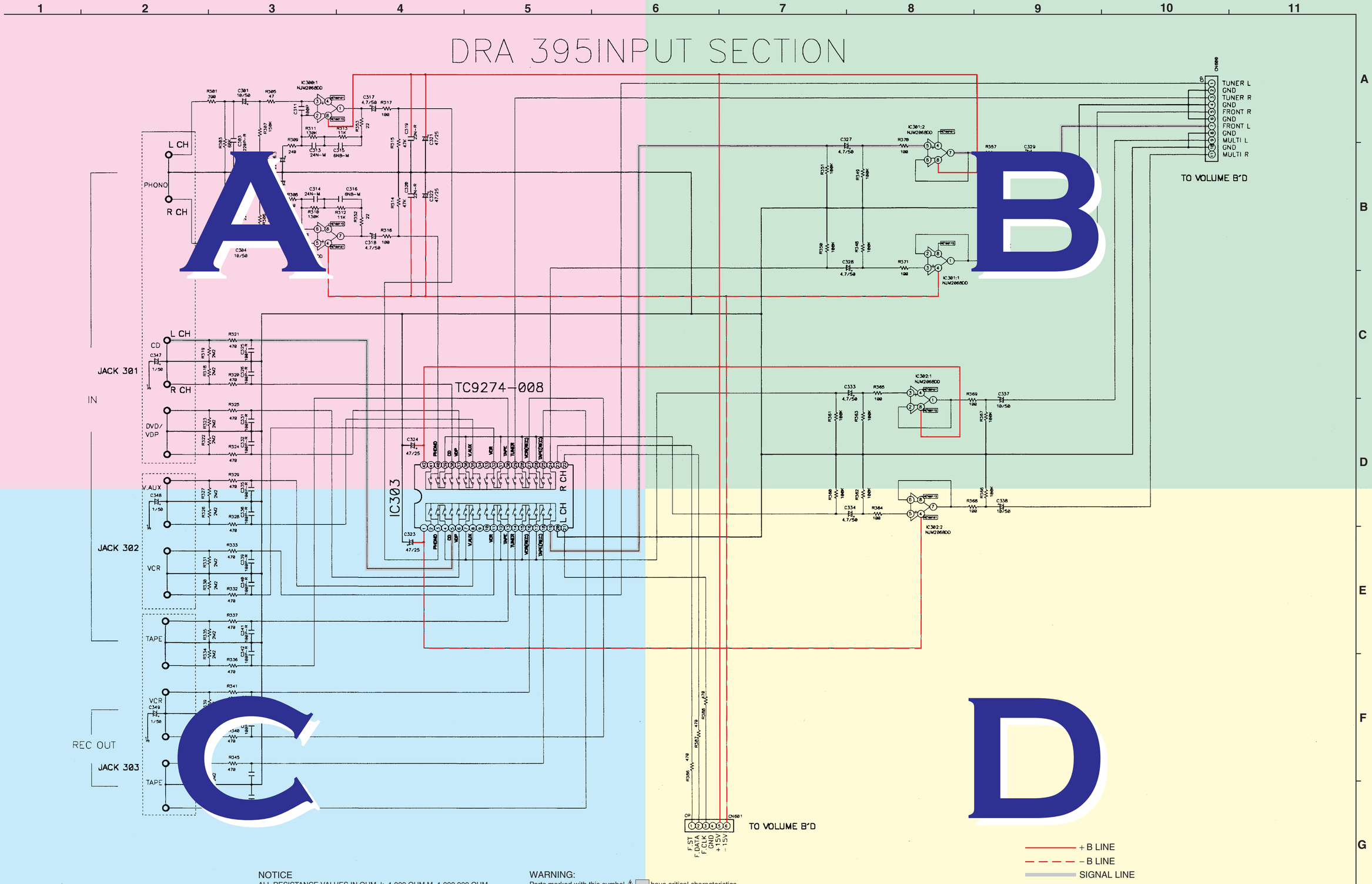


NOTICE
ALL RESISTANCE VALUES IN OHM. k=1,000 OHM M=1,000,000 OHM
ALL CAPACITANCE VALUES IN MICRO FARAD. P=MICRO-MICRO FARAD
EACH VOLTAGE AND CURRENT ARE MEASUERD AT MO SIGNAL INPUT CONDITION.
CIRCUIT AND PARTS ARE SUBJECT TO CHANGE WITHOUT PRIOR NOTICE.

WARNING:
Parts marked with this symbol ⚠ have critical characteristics.
Use ONLY replacement parts recommended by the manufacture.

CAUTION:
Before returning the unit to the customer, make sure you make either (1) a leakage current check or (2) a line to chassis resistance check. If the leakage current exceeds 0.5 milliamps, or if the resistance from chassis to either side of the power card is less than 460kohms, the unit is defective.

WARNING:
DO NOT return the unit to the customer until the problem is located and corrected.

SCHEMATIC DIAGRAMS(1/6)
INPUT UNIT

## SCHEMATIC DIAGRAMS(1/6)

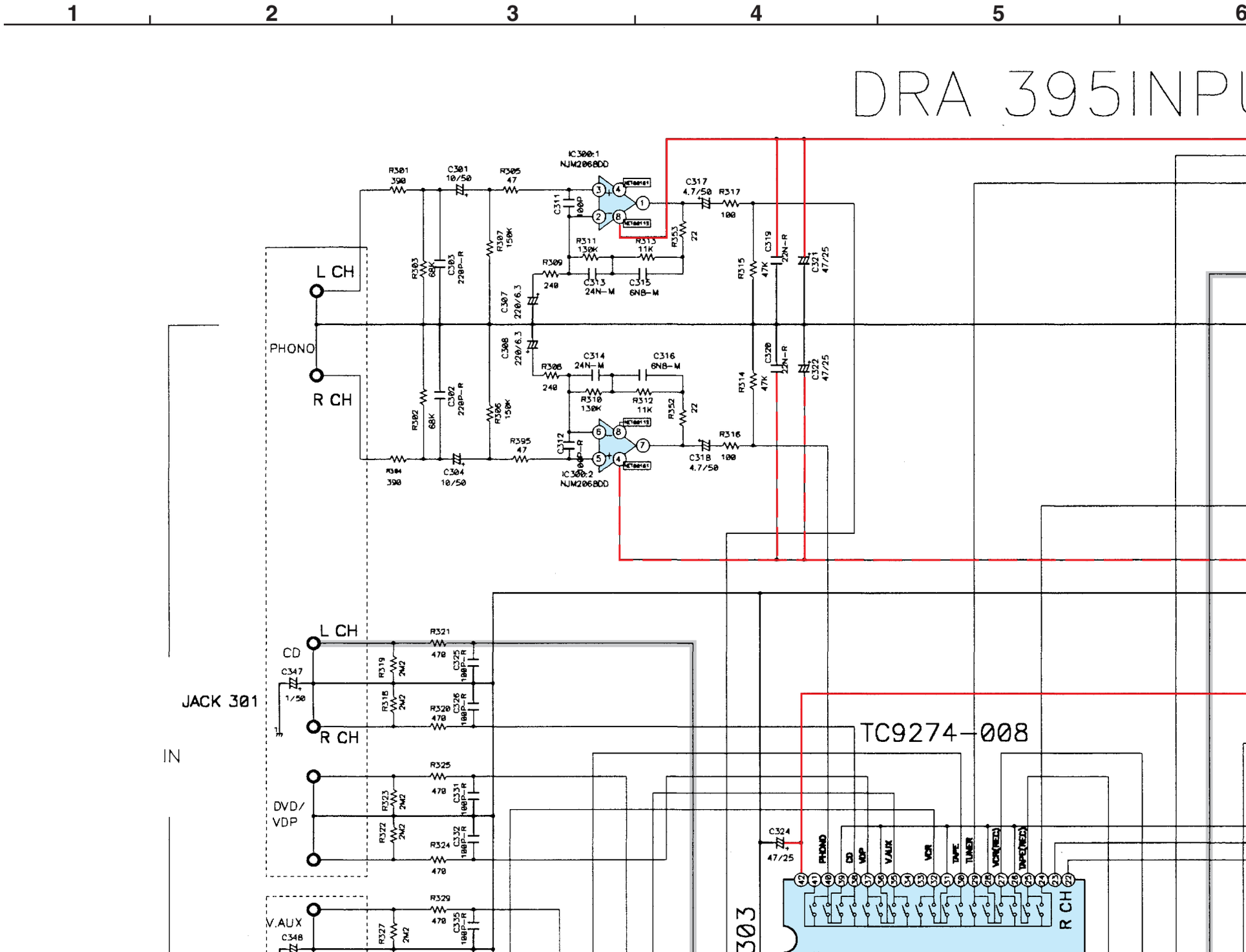

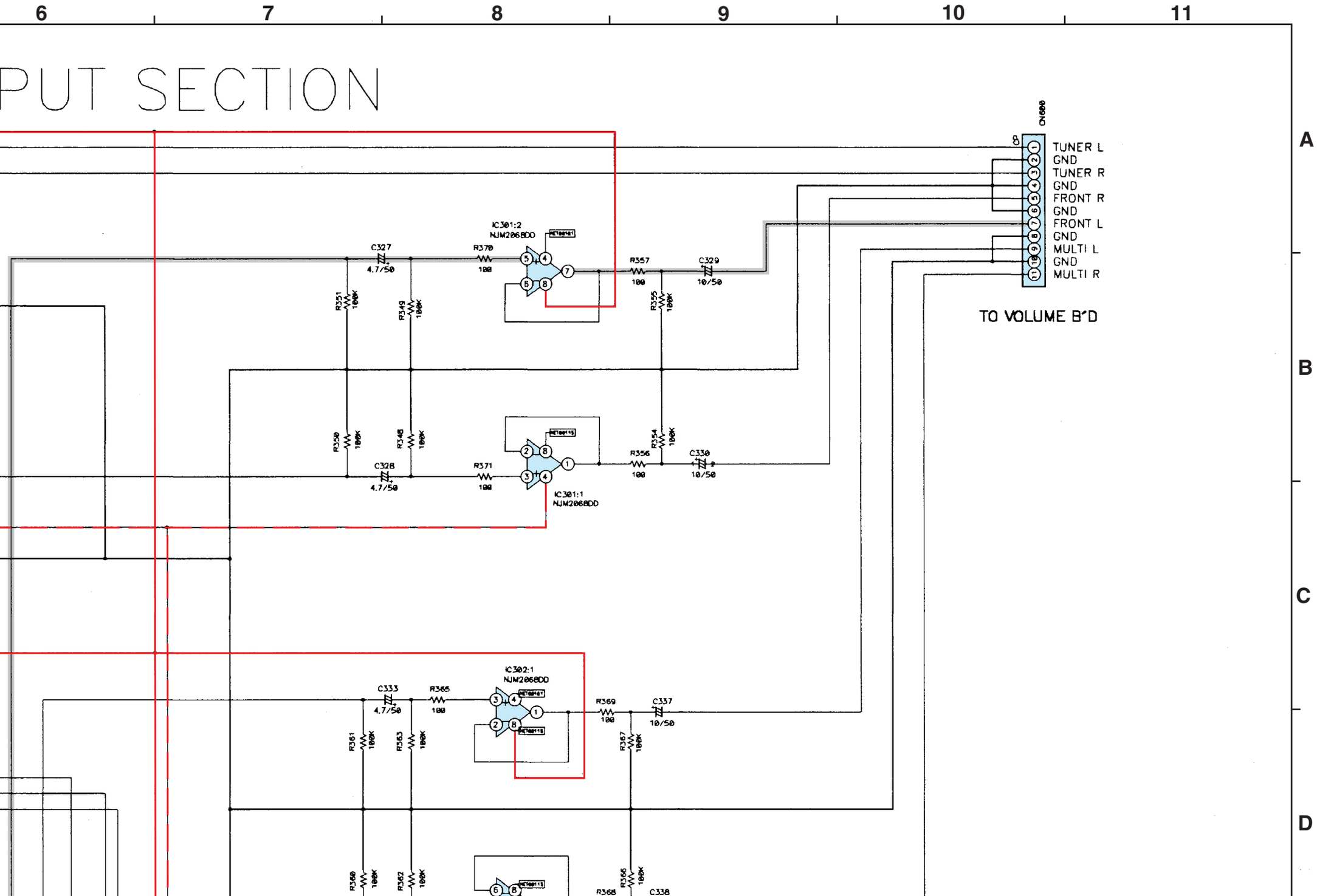
6
7
8
9
10
11
A
B
C
D
PUT SECTION
CN600
TUNER L
GND
TUNER R
GND
FRONT R
GND
FRONT L
GND
MULTI L
GND
MULTI R
TO VOLUME B'D
IC301:2
NJM2068DD
IC301:1
NJM2068DD
IC302:1
NJM2068DD
C327
4.7/50
R370
100
R357
100
C329
10/50
R351
100K
R349
100K
R355
100K
R350
100K
R348
100K
R354
100K
C328
4.7/50
R371
100
R356
100
C330
10/50
C333
4.7/50
R365
100
R369
100
C337
10/50
R361
100K
R363
100K
R367
100K
R360
100K
R362
100K
R366
100K
R368
C338

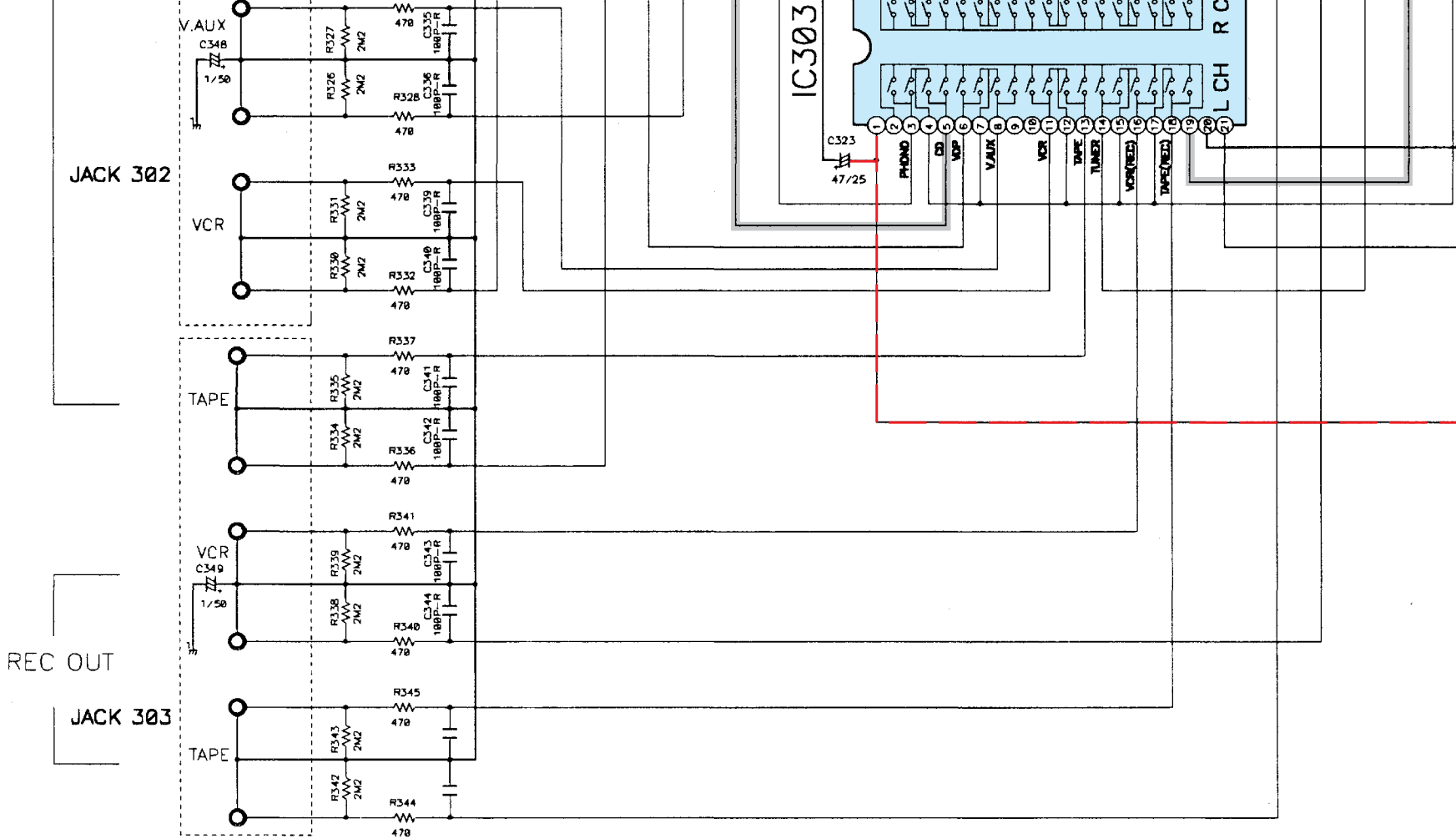


## NOTICE

ALL RESISTANCE VALUES IN OHM. k=1,000 OHM M=1,000,000 OHM
ALL CAPACITANCE VALUES IN MICRO FARAD. P=MICRO-MICRO FARAD
EACH VOLTAGE AND CURRENT ARE MEASUERD AT MO SIGNAL INPUT CONDITION.
CIRCUIT AND PARTS ARE SUBJECT TO CHANGE WITHOUT PRIOR NOTICE.

## WARNING:

Parts marked with this symbol ⚠ ▭ ha
Use ONLY replacement parts recommen

## CAUTION:

Before returning the unit to the customer
leakage current check or (2) a line to cha
current exceeds 0.5 milliamps, or if the re
of the power card is less than 460kohms

## WARNING:

DO NOT return the unit to the customer
corrected.

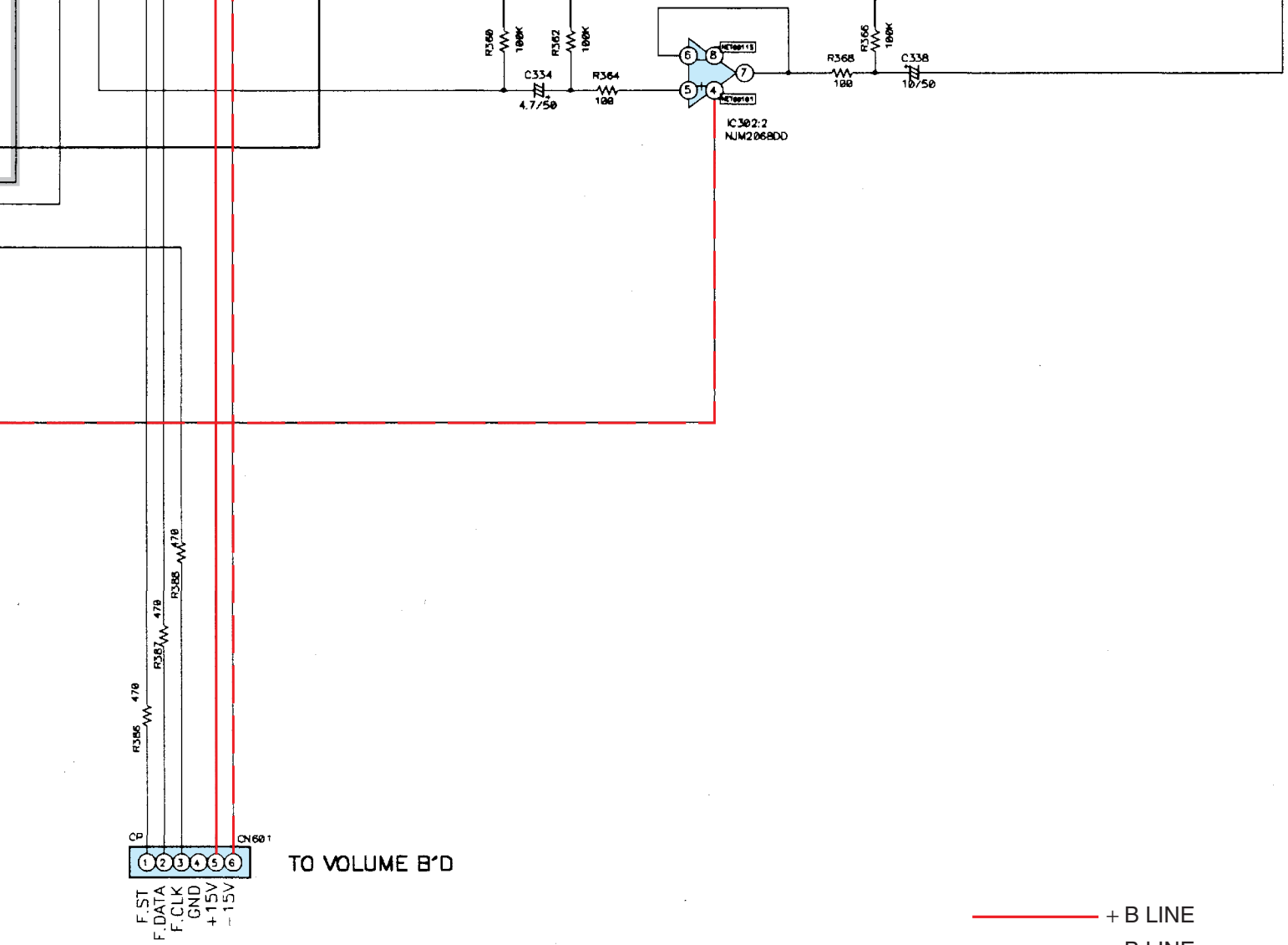


have critical characteristics.
commended by the manufacture.

ustomer, make sure you make either (1) a
ne to chassis resistance check. If the leakage
r if the resistance from chassis to either side
0kohms, the unit is defective.

ustomer until the problem is located and

+ B LINE
– B LINE
SIGNAL LINE

# SCHEMATIC DIAGRAMS(1/6)
## INPUT UNIT

E
F
G
H

## SCHEMATIC DIAGRAMS(2/6)

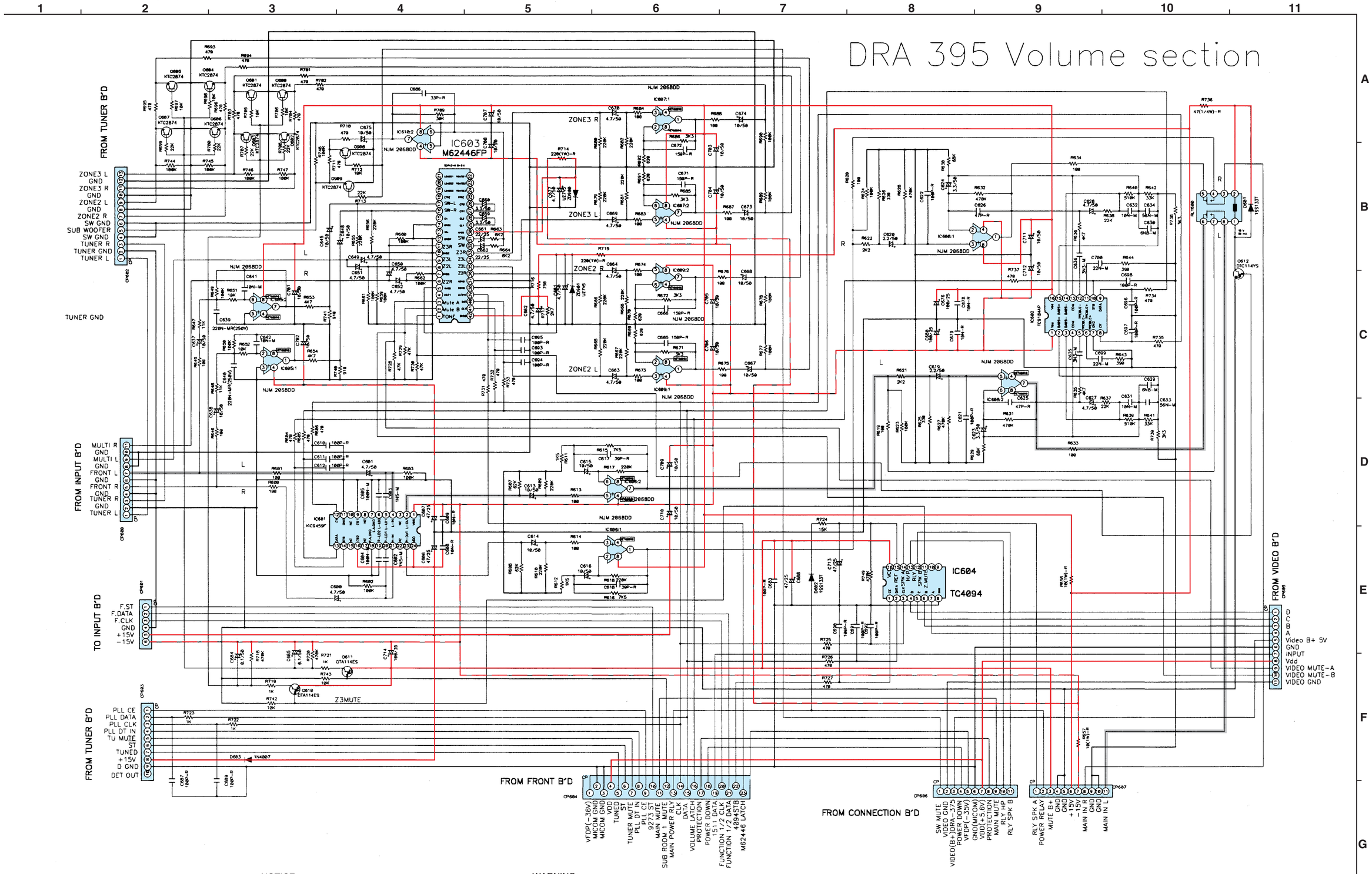


NOTICE
ALL RESISTANCE VALUES IN OHM. k=1,000 OHM M=1,000,000 OHM
ALL CAPACITANCE VALUES IN MICRO FARAD. P=MICRO-MICRO FARAD
EACH VOLTAGE AND CURRENT ARE MEASUERD AT MO SIGNAL INPUT CONDITION.
CIRCUIT AND PARTS ARE SUBJECT TO CHANGE WITHOUT PRIOR NOTICE.

WARNING:
Parts marked with this symbol ⚠ have critical characteristics.
Use ONLY replacement parts recommended by the manufacture.

CAUTION:
Before returning the unit to the customer, make sure you make either (1) a leakage current check or (2) a line to chassis resistance check. If the leakage current exceeds 0.5 milliamps, or if the resistance from chassis to either side of the power card is less than 460kohms, the unit is defective.

WARNING:
DO NOT return the unit to the customer until the problem is located and corrected.

SCHEMATIC DIAGRAMS(2/6)
VOLUME UNIT

## SCHEMATIC DIAGRAMS(2/6)

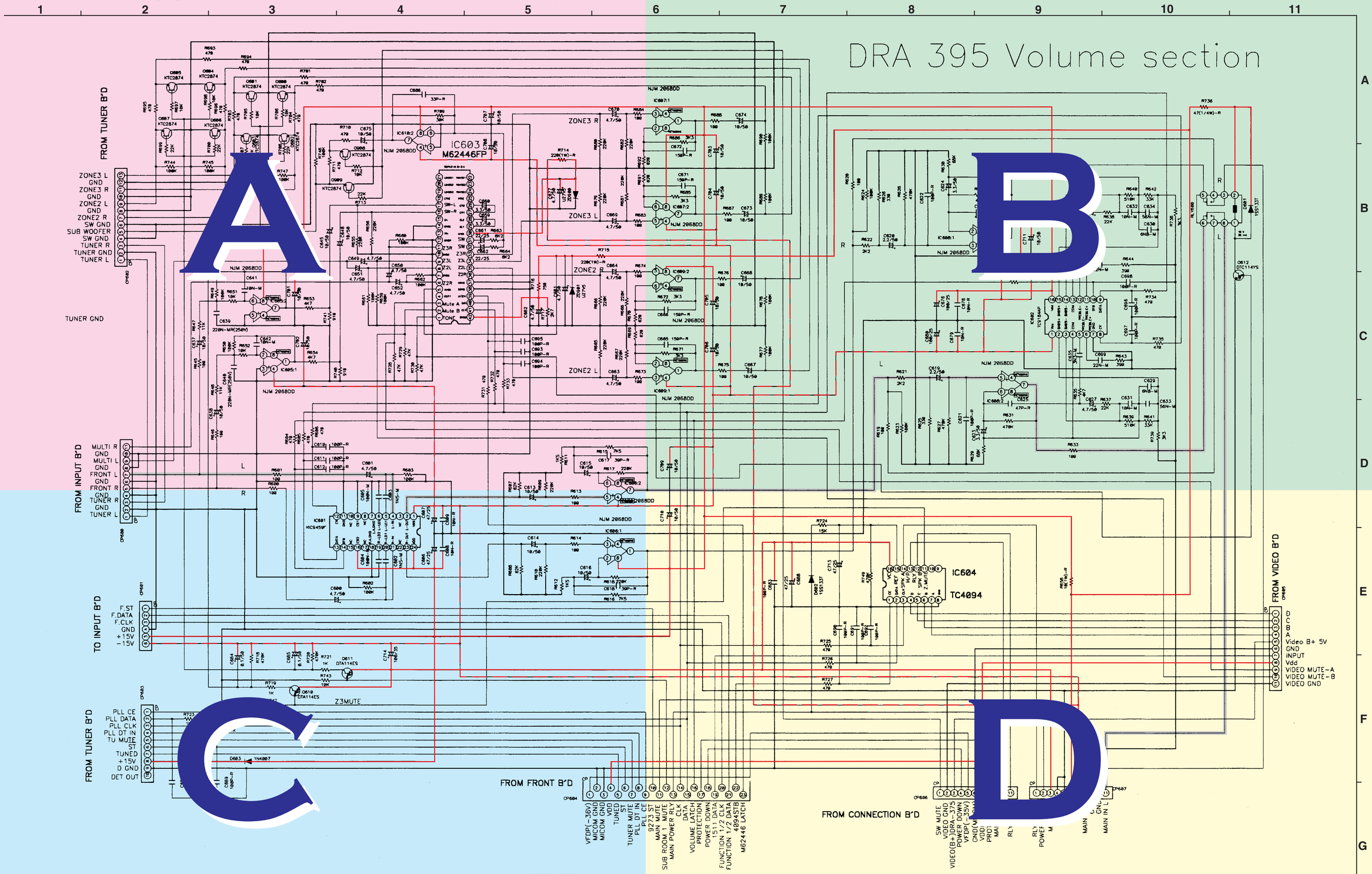


NOTICE
ALL RESISTANCE VALUES IN OHM. k=1,000 OHM M=1,000,000 OHM
ALL CAPACITANCE VALUES IN MICRO FARAD. P=MICRO-MICRO FARAD
EACH VOLTAGE AND CURRENT ARE MEASUERD AT MO SIGNAL INPUT CONDITION.
CIRCUIT AND PARTS ARE SUBJECT TO CHANGE WITHOUT PRIOR NOTICE.

WARNING:
Parts marked with this symbol ⚠ have critical characteristics.
Use ONLY replacement parts recommended by the manufacture.

CAUTION:
Before returning the unit to the customer, make sure you make either (1) a leakage current check or (2) a line to chassis resistance check. If the leakage current exceeds 0.5 milliamps, or if the resistance from chassis to either side of the power card is less than 460kohms, the unit is defective.

WARNING:
DO NOT return the unit to the customer until the problem is located and corrected.

+B LINE
−B LINE
SIGNAL LINE

SCHEMATIC DIAGRAMS(2/6)
VOLUME UNIT

## SCHEMATIC DIAGRAMS(2/6)

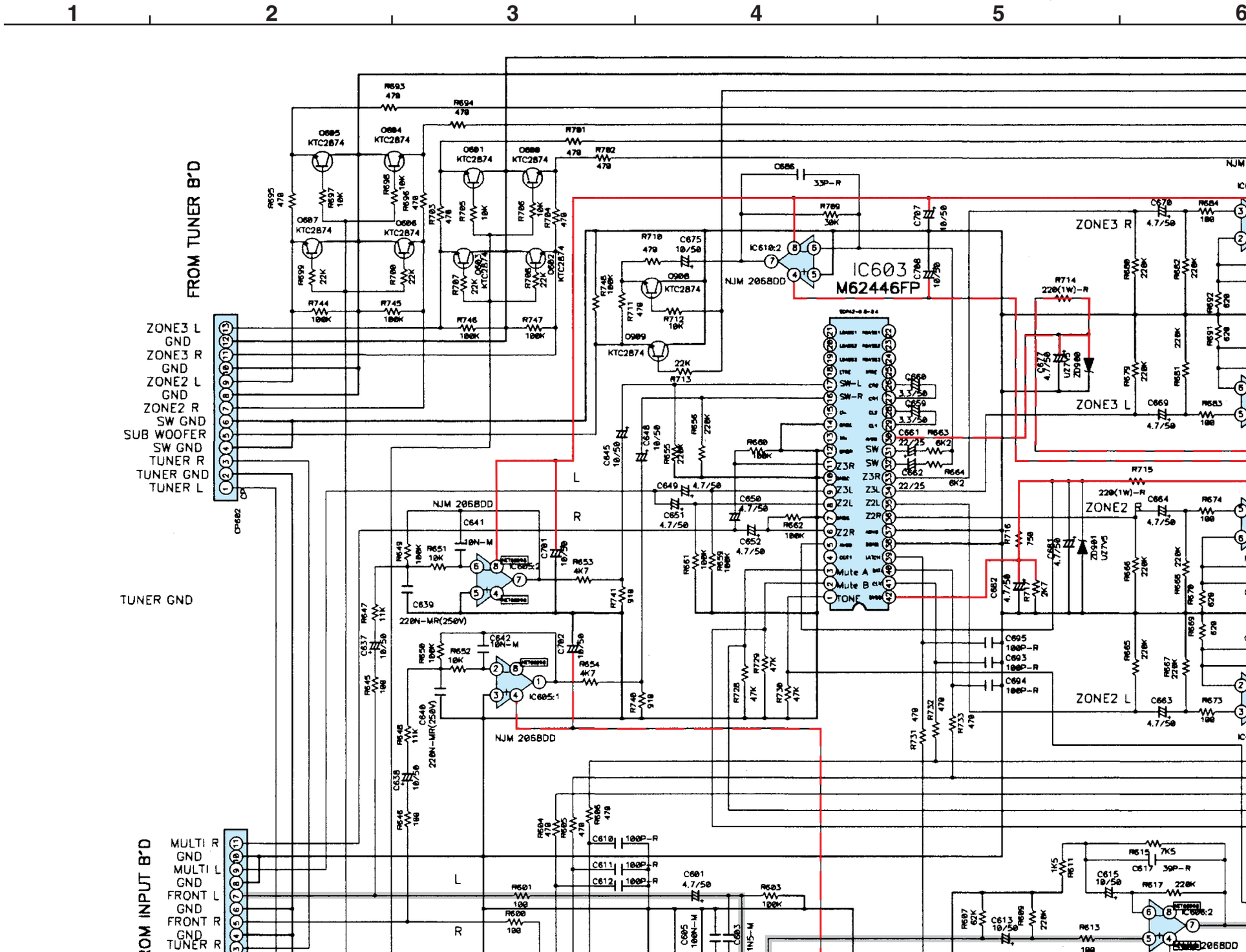

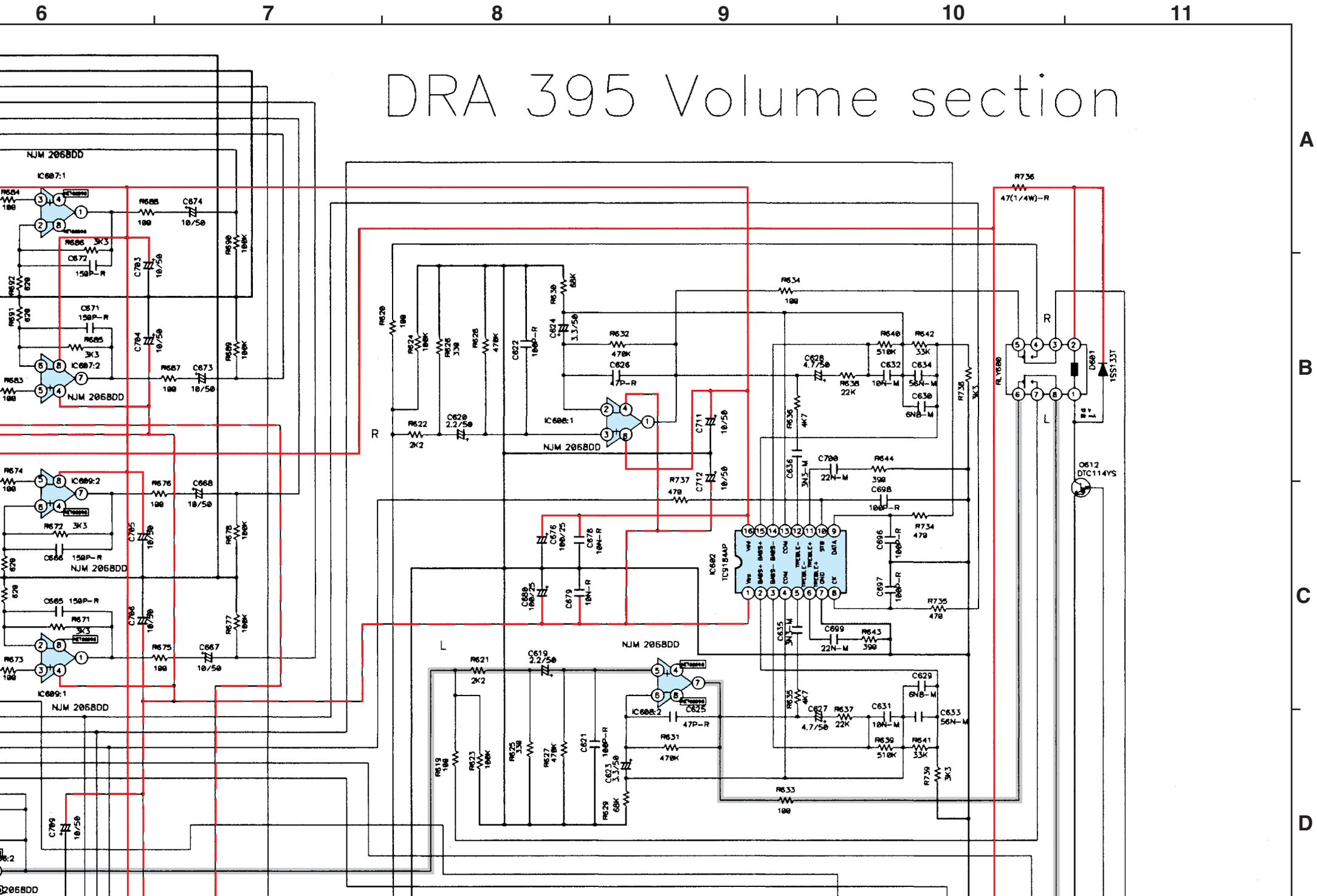
DRA 395 Volume section
6
7
8
9
10
11
A
B
C
D
NJM 2068DD
IC607:1
IC607:2
IC609:2
IC609:1
IC608:1
IC608:2
IC602
TC9184AP
RLY600
D601
15S133T
Q612
DTC114YS
R736
47(1/4W)-R
R
L

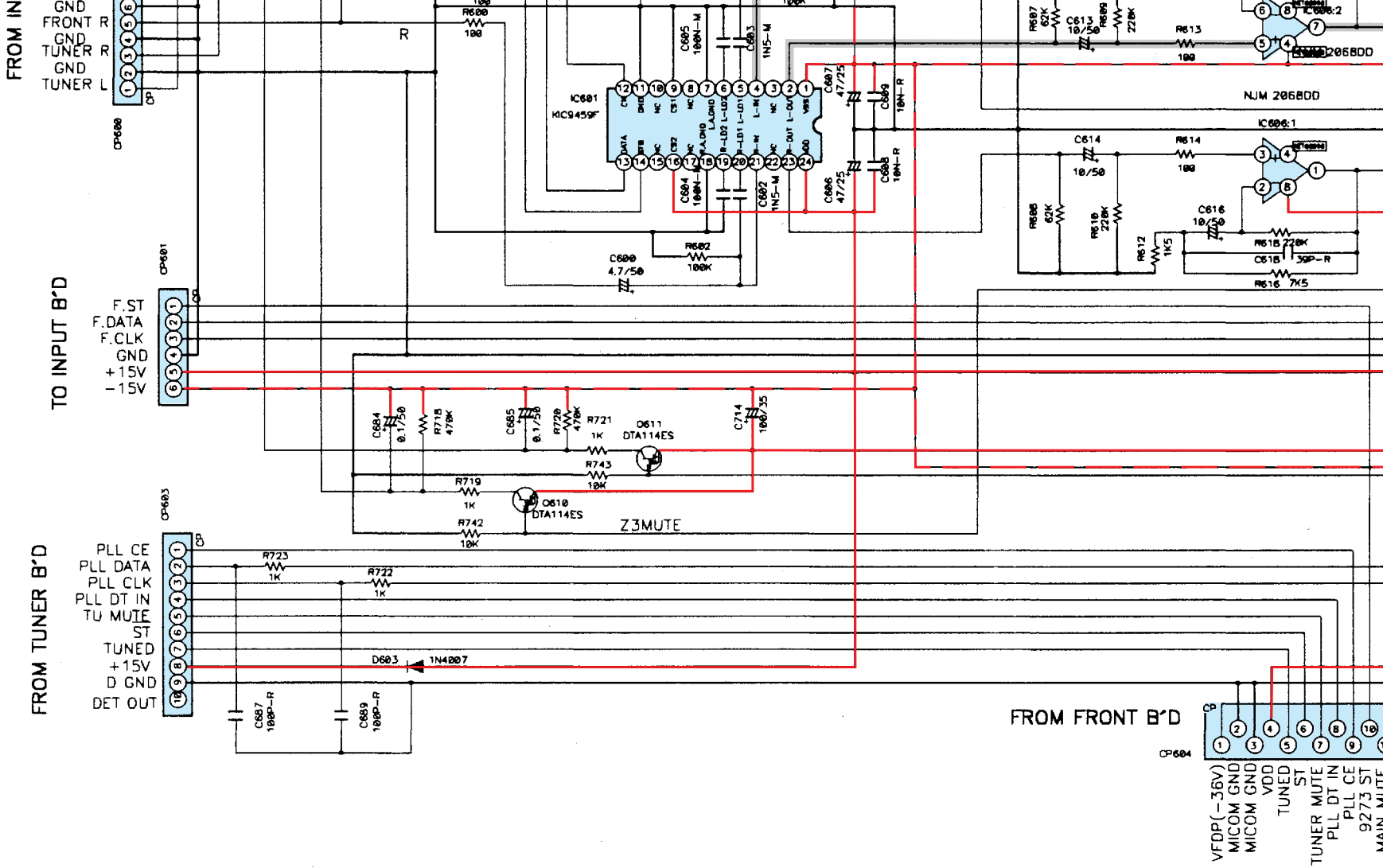


## NOTICE

ALL RESISTANCE VALUES IN OHM. k=1,000 OHM M=1,000,000 OHM
ALL CAPACITANCE VALUES IN MICRO FARAD. P=MICRO-MICRO FARAD
EACH VOLTAGE AND CURRENT ARE MEASUERD AT MO SIGNAL INPUT CONDITION.
CIRCUIT AND PARTS ARE SUBJECT TO CHANGE WITHOUT PRIOR NOTICE.

## WARNING:

Parts marked with this symbol ⚠ ▭ ha
Use ONLY replacement parts recommen

## CAUTION:

Before returning the unit to the custome
leakage current check or (2) a line to ch
current exceeds 0.5 milliamps, or if the
of the power card is less than 460kohms

## WARNING:

DO NOT return the unit to the customer
corrected.

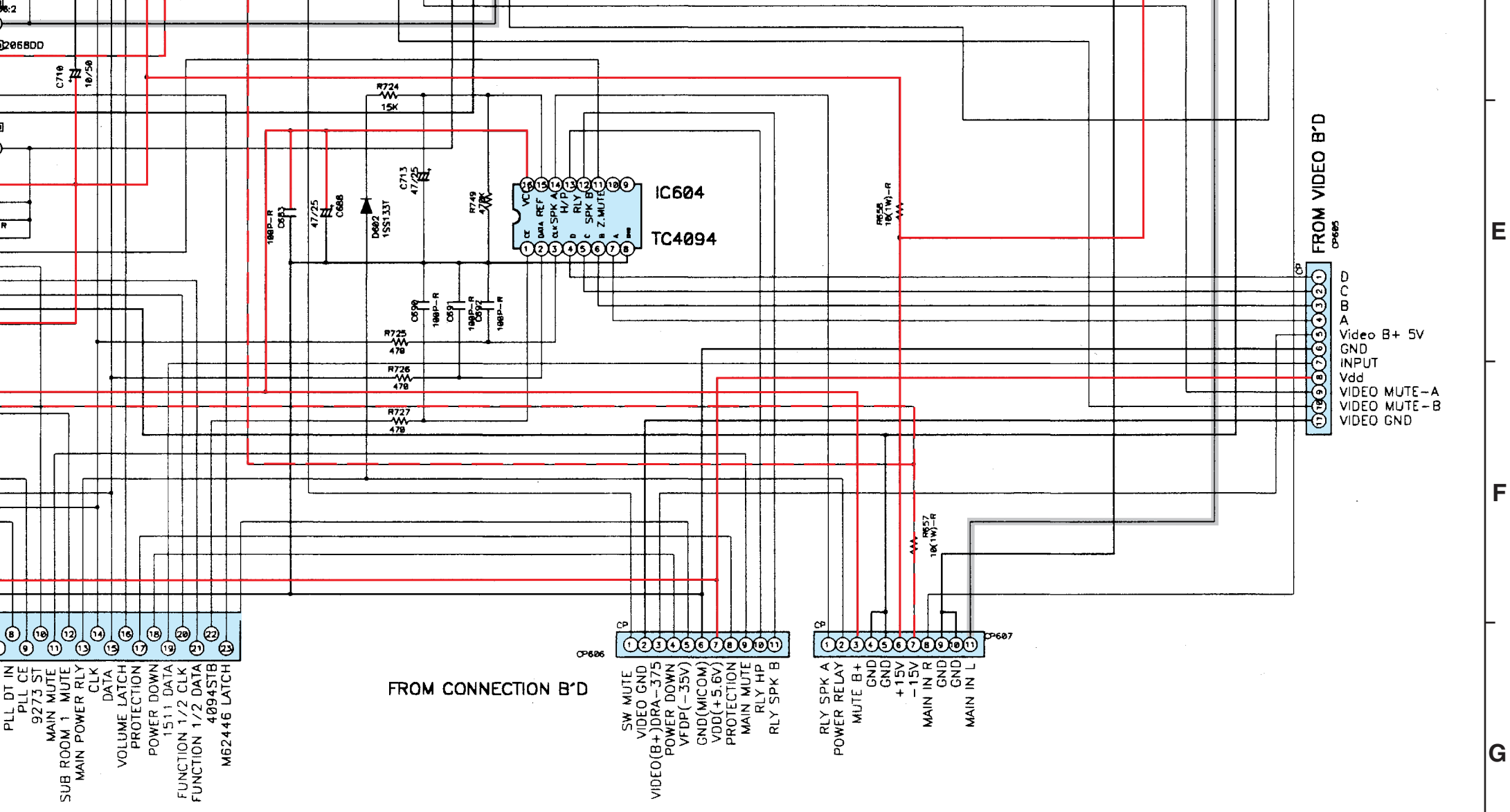


have critical characteristics.
ecommended by the manufacture.

customer, make sure you make either (1) a
ne to chassis resistance check. If the leakage
or if the resistance from chassis to either side
60kohms, the unit is defective.

ustomer until the problem is located and

+B LINE
−B LINE
SIGNAL LINE

# SCHEMATIC DIAGRAMS(2/6)
## VOLUME UNIT

## SCHEMATIC DIAGRAMS(3/6)

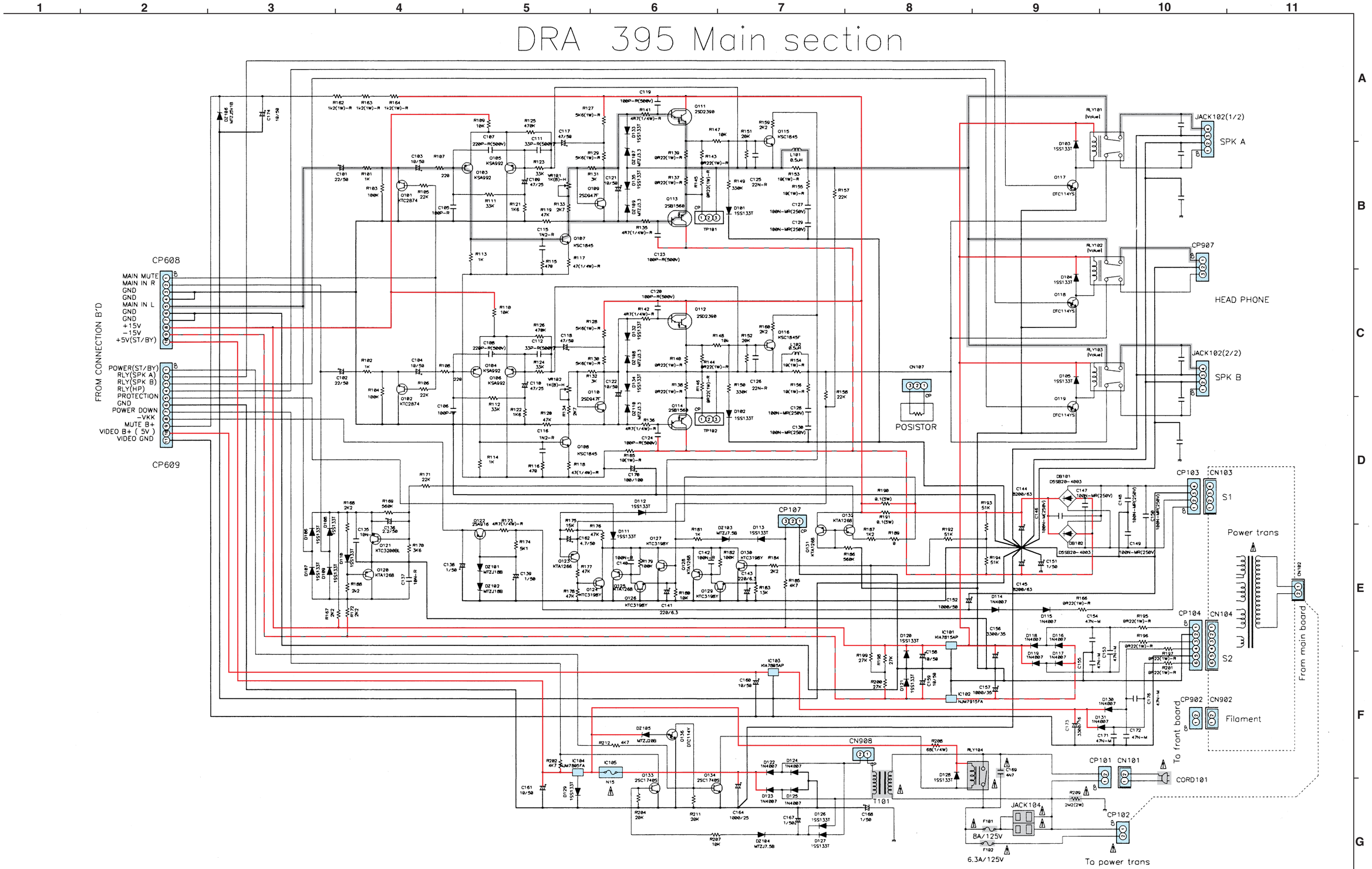


NOTICE
ALL RESISTANCE VALUES IN OHM. k=1,000 OHM M=1,000,000 OHM
ALL CAPACITANCE VALUES IN MICRO FARAD. P=MICRO-MICRO FARAD
EACH VOLTAGE AND CURRENT ARE MEASUERD AT MO SIGNAL INPUT CONDITION.
CIRCUIT AND PARTS ARE SUBJECT TO CHANGE WITHOUT PRIOR NOTICE.

WARNING:
Parts marked with this symbol ⚠ have critical characteristics.
Use ONLY replacement parts recommended by the manufacture.

CAUTION:
Before returning the unit to the customer, make sure you make either (1) a leakage current check or (2) a line to chassis resistance check. If the leakage current exceeds 0.5 milliamps, or if the resistance from chassis to either side of the power card is less than 460kohms, the unit is defective.

WARNING:
DO NOT return the unit to the customer until the problem is located and corrected.

SCHEMATIC DIAGRAMS(3/6)
MAIN UNIT

## SCHEMATIC DIAGRAMS(3/6)

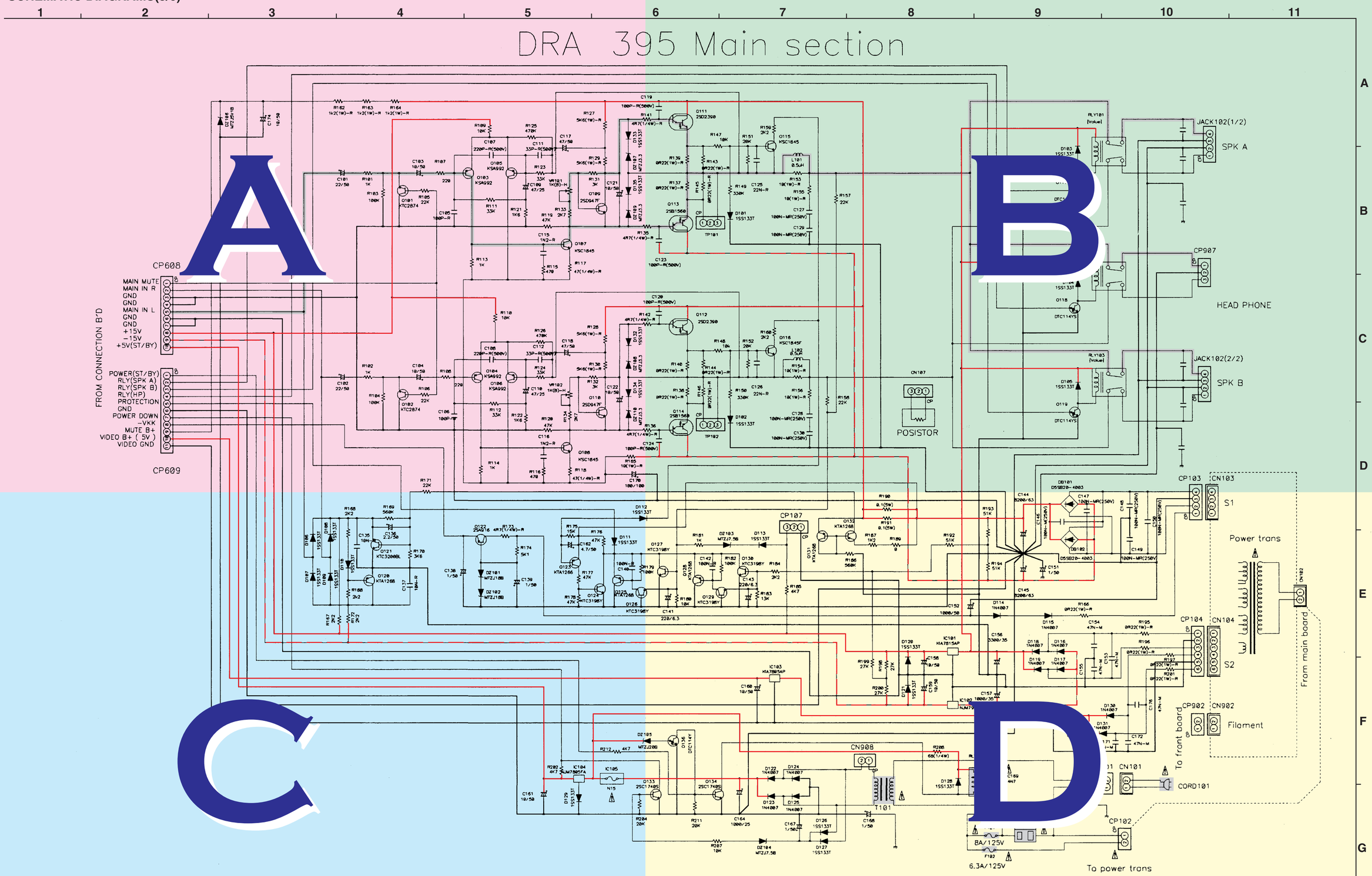


NOTICE
ALL RESISTANCE VALUES IN OHM. k=1,000 OHM M=1,000,000 OHM
ALL CAPACITANCE VALUES IN MICRO FARAD. P=MICRO-MICRO FARAD
EACH VOLTAGE AND CURRENT ARE MEASUERD AT MO SIGNAL INPUT CONDITION.
CIRCUIT AND PARTS ARE SUBJECT TO CHANGE WITHOUT PRIOR NOTICE.

WARNING:
Parts marked with this symbol ⚠ have critical characteristics.
Use ONLY replacement parts recommended by the manufacture.

CAUTION:
Before returning the unit to the customer, make sure you make either (1) a leakage current check or (2) a line to chassis resistance check. If the leakage current exceeds 0.5 milliamps, or if the resistance from chassis to either side of the power card is less than 460kohms, the unit is defective.

WARNING:
DO NOT return the unit to the customer until the problem is located and corrected.

+ B LINE
− B LINE
SIGNAL LINE

SCHEMATIC DIAGRAMS(3/6)
MAIN UNIT

## SCHEMATIC DIAGRAMS(3/6)

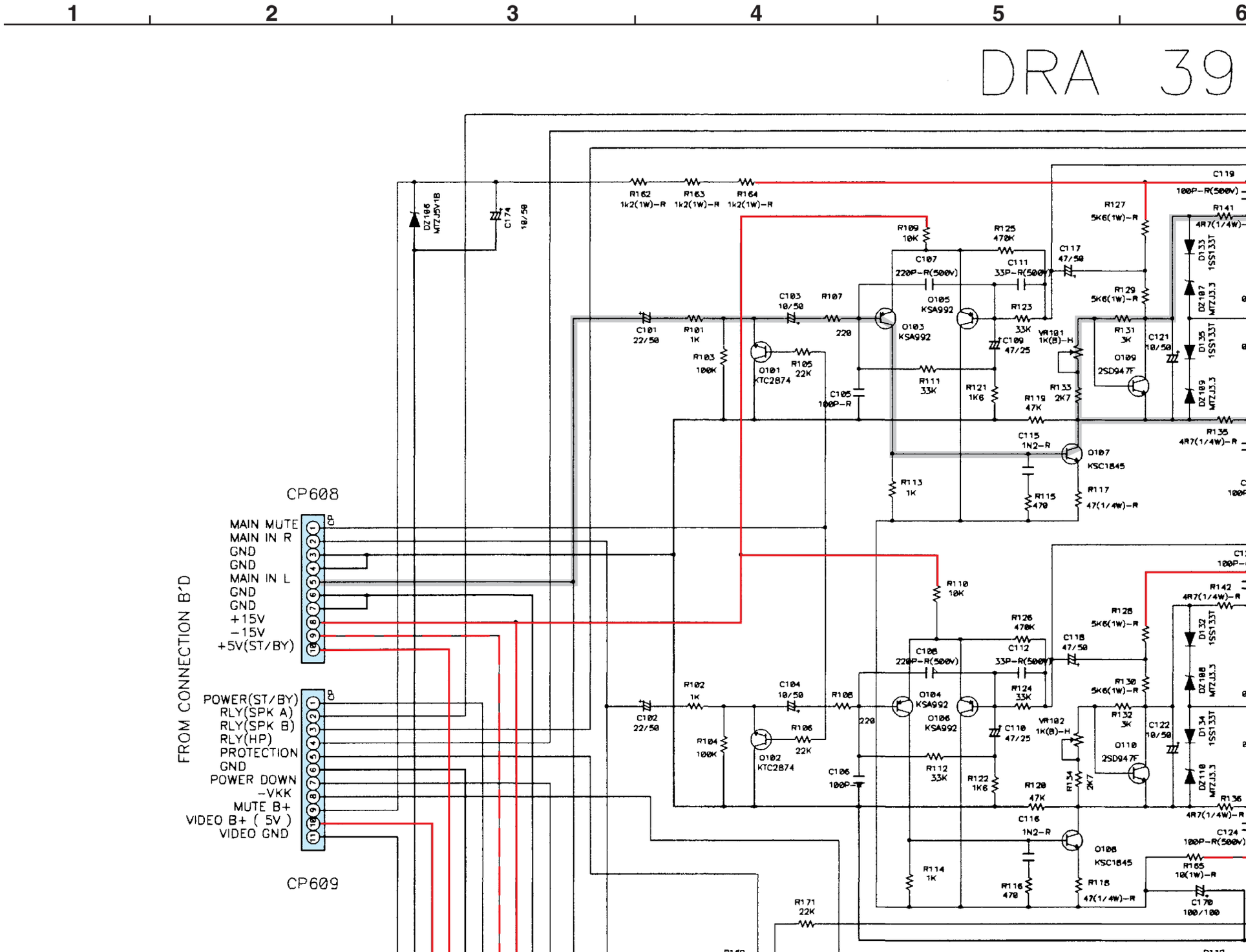

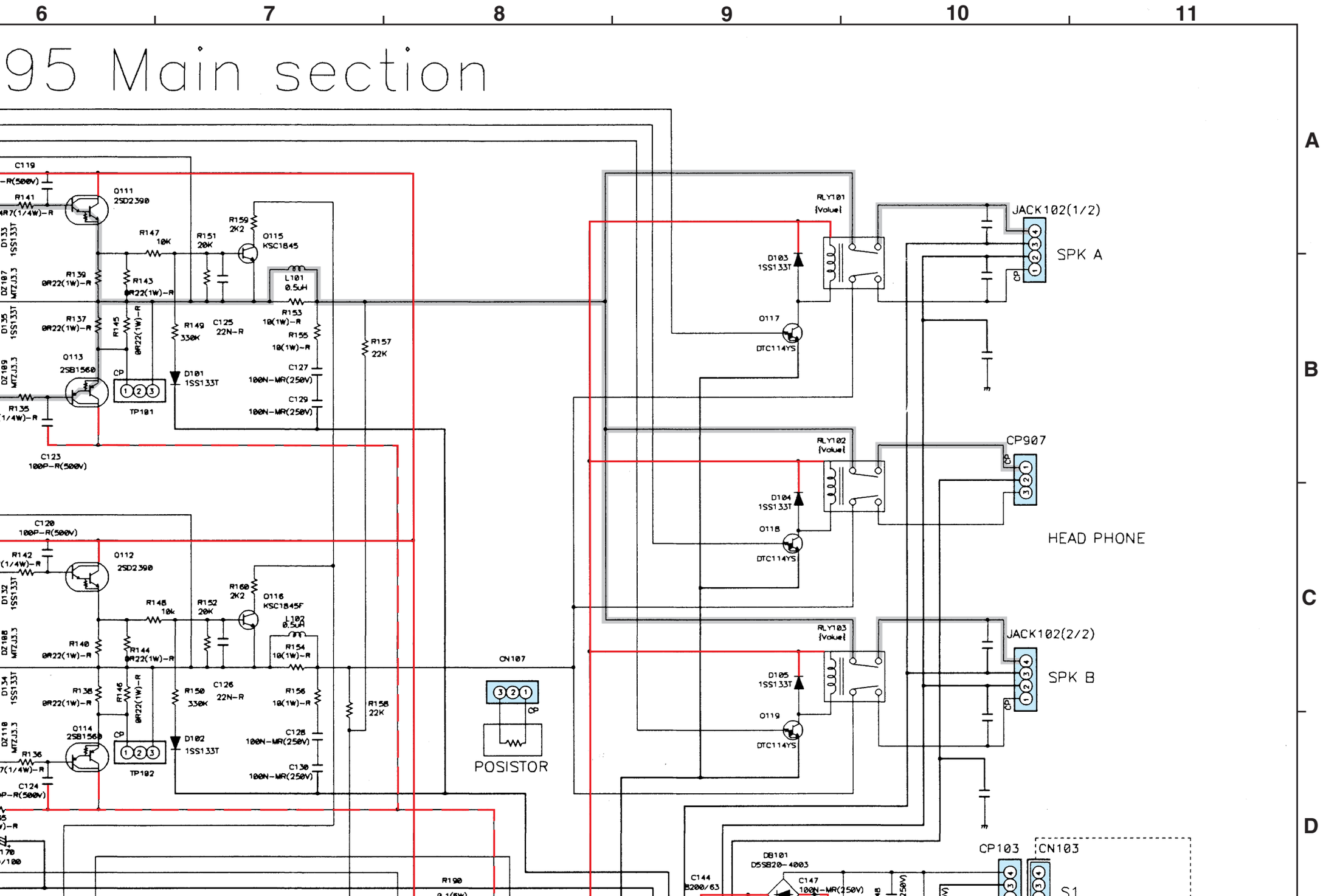
6
7
8
9
10
11
A
B
C
D
95 Main section
C119
-R(500V)
R141
4R7(1/4W)-R
Q111
2SD2390
R147
10K
R151
20K
R159
2K2
Q115
KSC1845
L101
0.5uH
R153
10(1W)-R
R155
10(1W)-R
R139
0R22(1W)-R
R143
0R22(1W)-R
R137
0R22(1W)-R
R145
0R22(1W)-R
R149
330K
C125
22N-R
R157
22K
Q113
2SB1560
D101
1SS133T
TP101
C127
100N-MR(250V)
C129
100N-MR(250V)
R135
(1/4W)-R
C123
100P-R(500V)
C120
100P-R(500V)
R142
(1/4W)-R
Q112
2SD2390
R148
10k
R152
20K
R160
2K2
Q116
KSC1845F
L102
0.5uH
R154
10(1W)-R
R140
0R22(1W)-R
R144
0R22(1W)-R
R138
0R22(1W)-R
R146
0R22(1W)-R
R150
330K
C126
22N-R
R156
10(1W)-R
R158
22K
Q114
2SB1560
D102
1SS133T
TP102
C128
100N-MR(250V)
C130
100N-MR(250V)
R136
7(1/4W)-R
C124
P-R(500V)
CN107
POSISTOR
RLY101
{Value}
D103
1SS133T
Q117
DTC114YS
JACK102(1/2)
SPK A
RLY102
{Value}
D104
1SS133T
Q118
DTC114YS
CP907
HEAD PHONE
RLY103
{Value}
D105
1SS133T
Q119
DTC114YS
JACK102(2/2)
SPK B
DB101
DSSB20-4003
C144
3200/63
C147
100N-MR(250V)
R190
CP103
CN103
S1

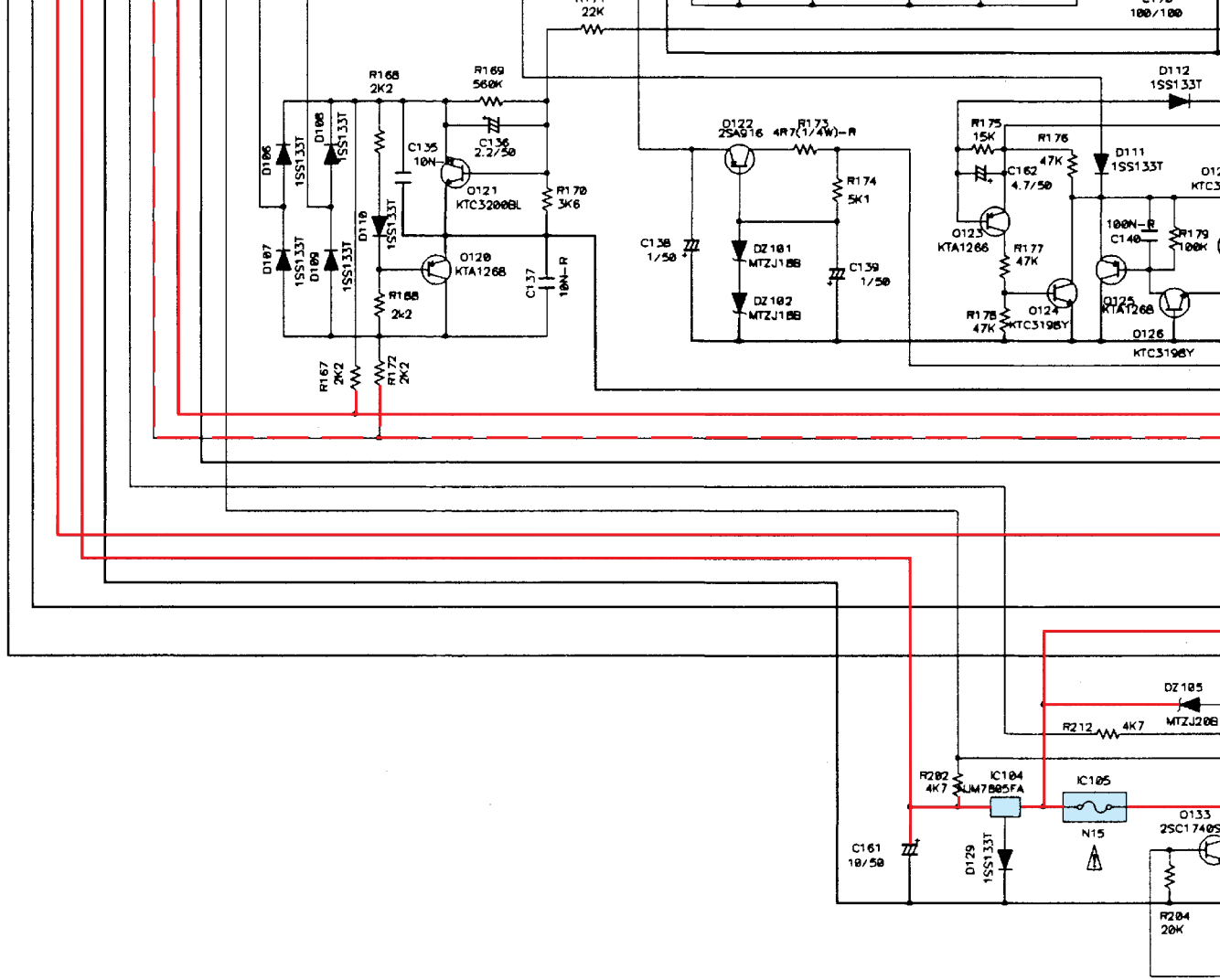


## NOTICE

ALL RESISTANCE VALUES IN OHM. k=1,000 OHM M=1,000,000 OHM
ALL CAPACITANCE VALUES IN MICRO FARAD. P=MICRO-MICRO FARAD
EACH VOLTAGE AND CURRENT ARE MEASUERD AT MO SIGNAL INPUT CONDITION.
CIRCUIT AND PARTS ARE SUBJECT TO CHANGE WITHOUT PRIOR NOTICE.

## WARNING:

Parts marked with this symbol ⚠ ▭ hav
Use ONLY replacement parts recommend

## CAUTION:

Before returning the unit to the customer,
leakage current check or (2) a line to cha
current exceeds 0.5 milliamps, or if the re
of the power card is less than 460kohms,

## WARNING:

DO NOT return the unit to the customer u
corrected.

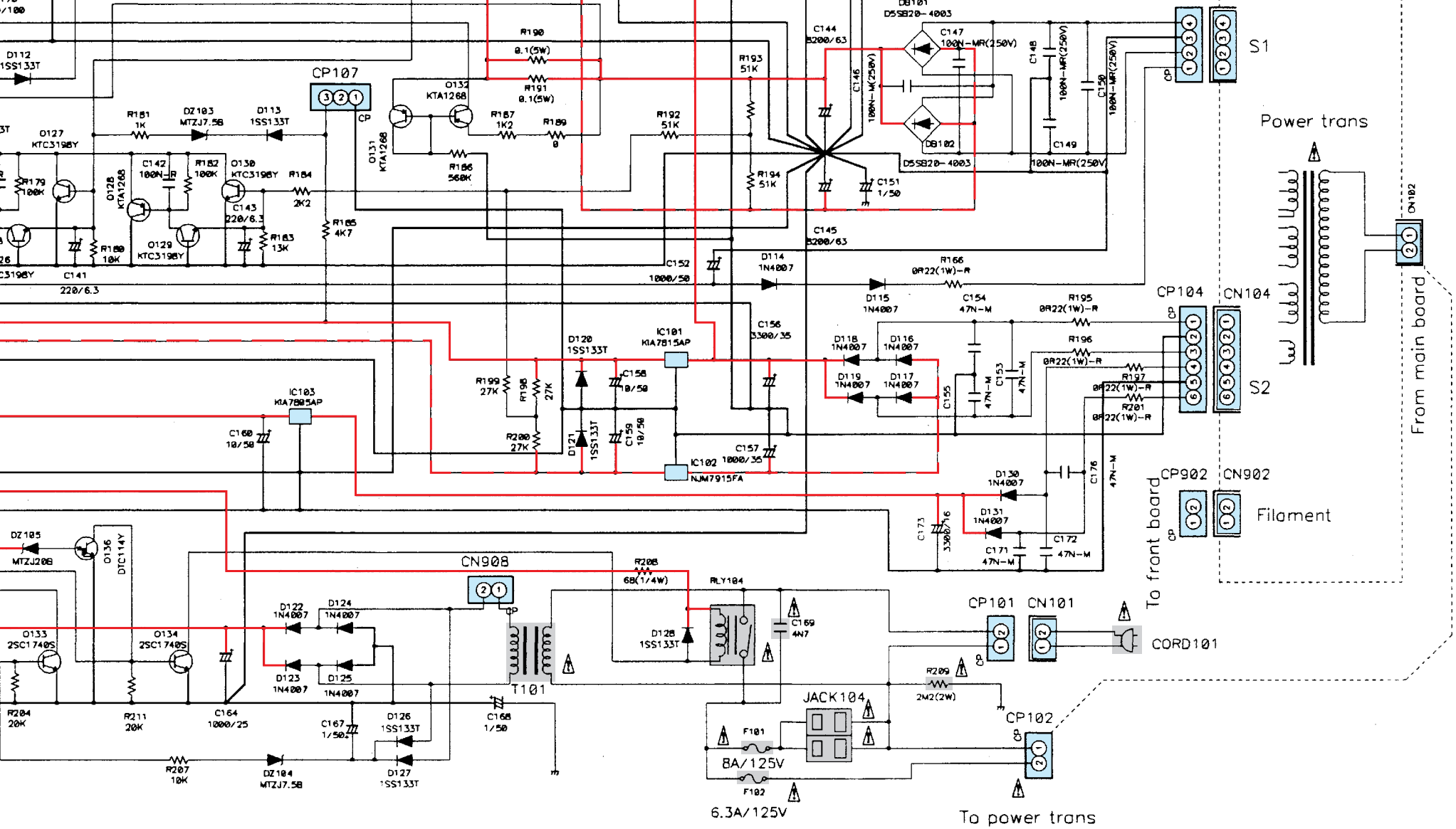


have critical characteristics.
ommended by the manufacture.

ustomer, make sure you make either (1) a
e to chassis resistance check. If the leakage
r if the resistance from chassis to either side
0kohms, the unit is defective.

stomer until the problem is located and

+ B LINE
– B LINE
SIGNAL LINE

# SCHEMATIC DIAGRAMS(3/6)
## MAIN UNIT

## SCHEMATIC DIAGRAMS(4/6)

# DRA 395 Video Section

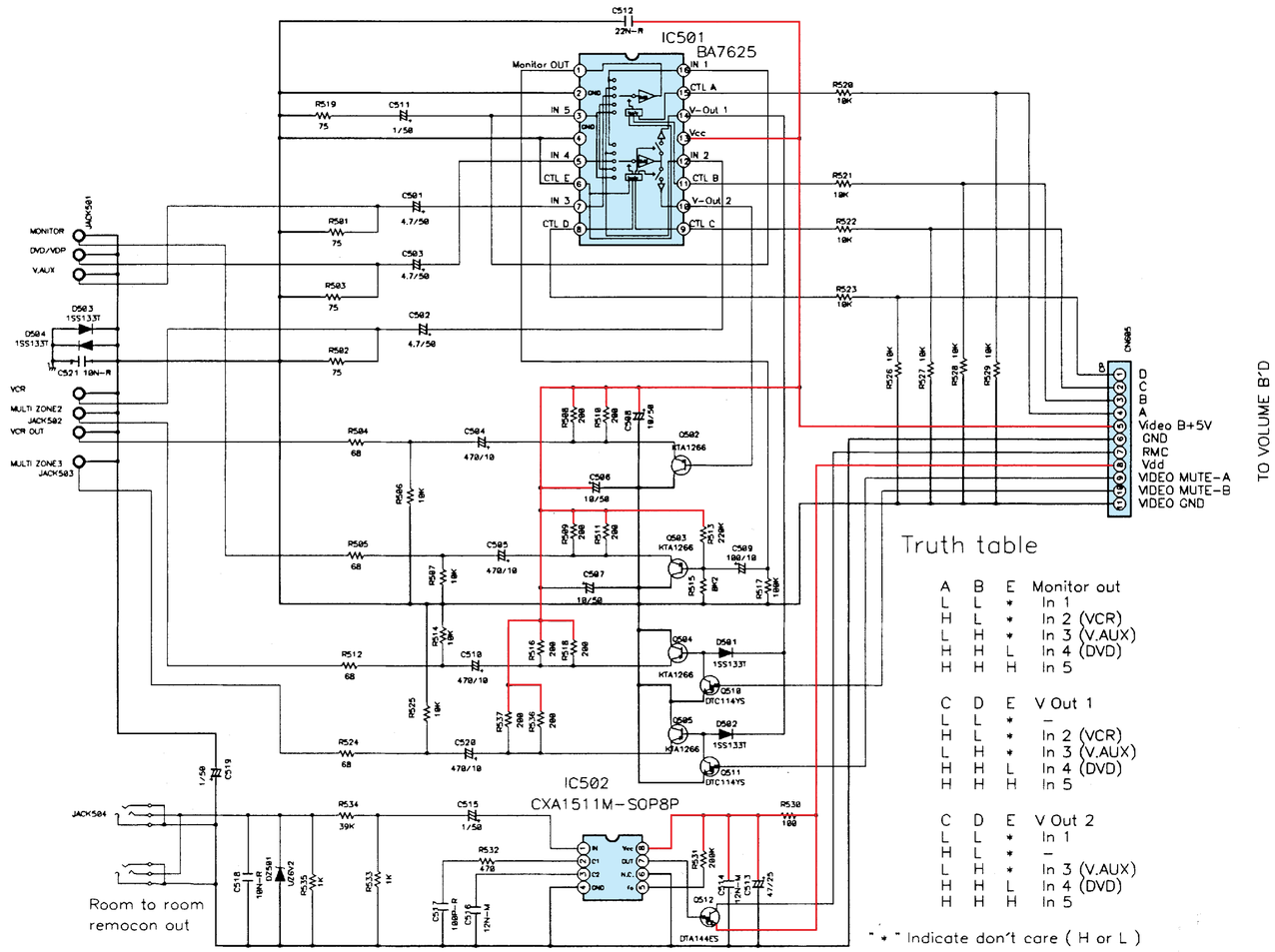


Truth table

| A | B | E | Monitor out |
|---|---|---|---|
| L | L | * | In 1 |
| H | L | * | In 2 (VCR) |
| L | H | * | In 3 (V.AUX) |
| H | H | L | In 4 (DVD) |
| H | H | H | In 5 |

| C | D | E | V Out 1 |
|---|---|---|---|
| L | L | * | – |
| H | L | * | In 2 (VCR) |
| L | H | * | In 3 (V.AUX) |
| H | H | L | In 4 (DVD) |
| H | H | H | In 5 |

| C | D | E | V Out 2 |
|---|---|---|---|
| L | L | * | In 1 |
| H | L | * | – |
| L | H | * | In 3 (V.AUX) |
| H | H | L | In 4 (DVD) |
| H | H | H | In 5 |

" * " Indicate don't care ( H or L )

# DRA 395 Connection Section

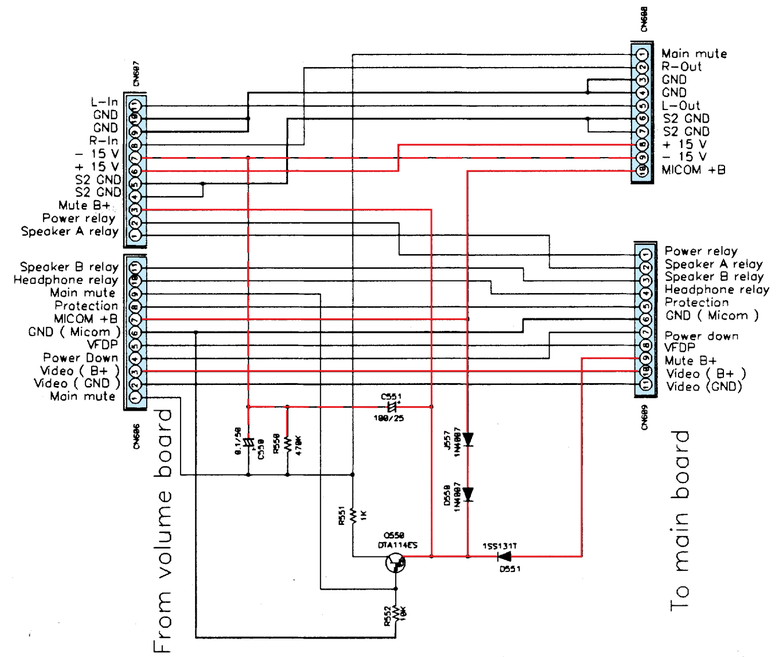


NOTICE
ALL RESISTANCE VALUES IN OHM. k=1,000 OHM M=1,000,000 OHM
ALL CAPACITANCE VALUES IN MICRO FARAD. P=MICRO-MICRO FARAD
EACH VOLTAGE AND CURRENT ARE MEASUERD AT MO SIGNAL INPUT CONDITION.
CIRCUIT AND PARTS ARE SUBJECT TO CHANGE WITHOUT PRIOR NOTICE.

WARNING:
Parts marked with this symbol ⚠ have critical characteristics.
Use ONLY replacement parts recommended by the manufacture.

CAUTION:
Before returning the unit to the customer, make sure you make either (1) a leakage current check or (2) a line to chassis resistance check. If the leakage current exceeds 0.5 milliamps, or if the resistance from chassis to either side of the power card is less than 460kohms, the unit is defective.

WARNING:
DO NOT return the unit to the customer until the problem is located and corrected.

+B LINE
–B LINE

SCHEMATIC DIAGRAMS(4/6)
VIDEO UNIT
CONNECTOR UNIT

## SCHEMATIC DIAGRAMS(4/6)

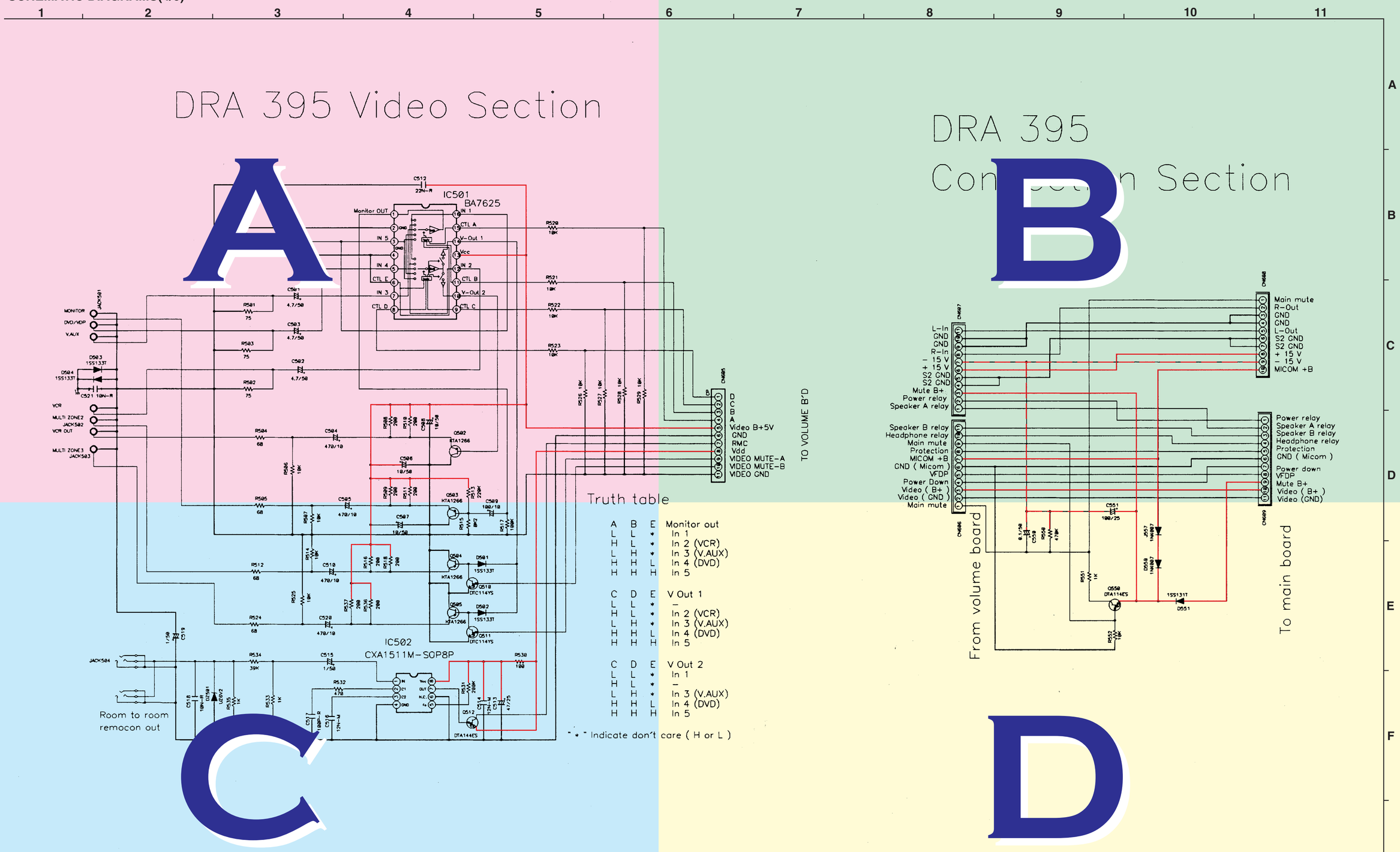


NOTICE
ALL RESISTANCE VALUES IN OHM. k=1,000 OHM M=1,000,000 OHM
ALL CAPACITANCE VALUES IN MICRO FARAD. P=MICRO-MICRO FARAD
EACH VOLTAGE AND CURRENT ARE MEASUERD AT MO SIGNAL INPUT CONDITION.
CIRCUIT AND PARTS ARE SUBJECT TO CHANGE WITHOUT PRIOR NOTICE.

WARNING:
Parts marked with this symbol ⚠ have critical characteristics.
Use ONLY replacement parts recommended by the manufacture.

CAUTION:
Before returning the unit to the customer, make sure you make either (1) a leakage current check or (2) a line to chassis resistance check. If the leakage current exceeds 0.5 milliamps, or if the resistance from chassis to either side of the power card is less than 460kohms, the unit is defective.

WARNING:
DO NOT return the unit to the customer until the problem is located and corrected.

+B LINE
–B LINE

SCHEMATIC DIAGRAMS(4/6)
VIDEO UNIT
CONNECTOR UNIT

1 2 3 4 5 6

# DRA 395 Video Section

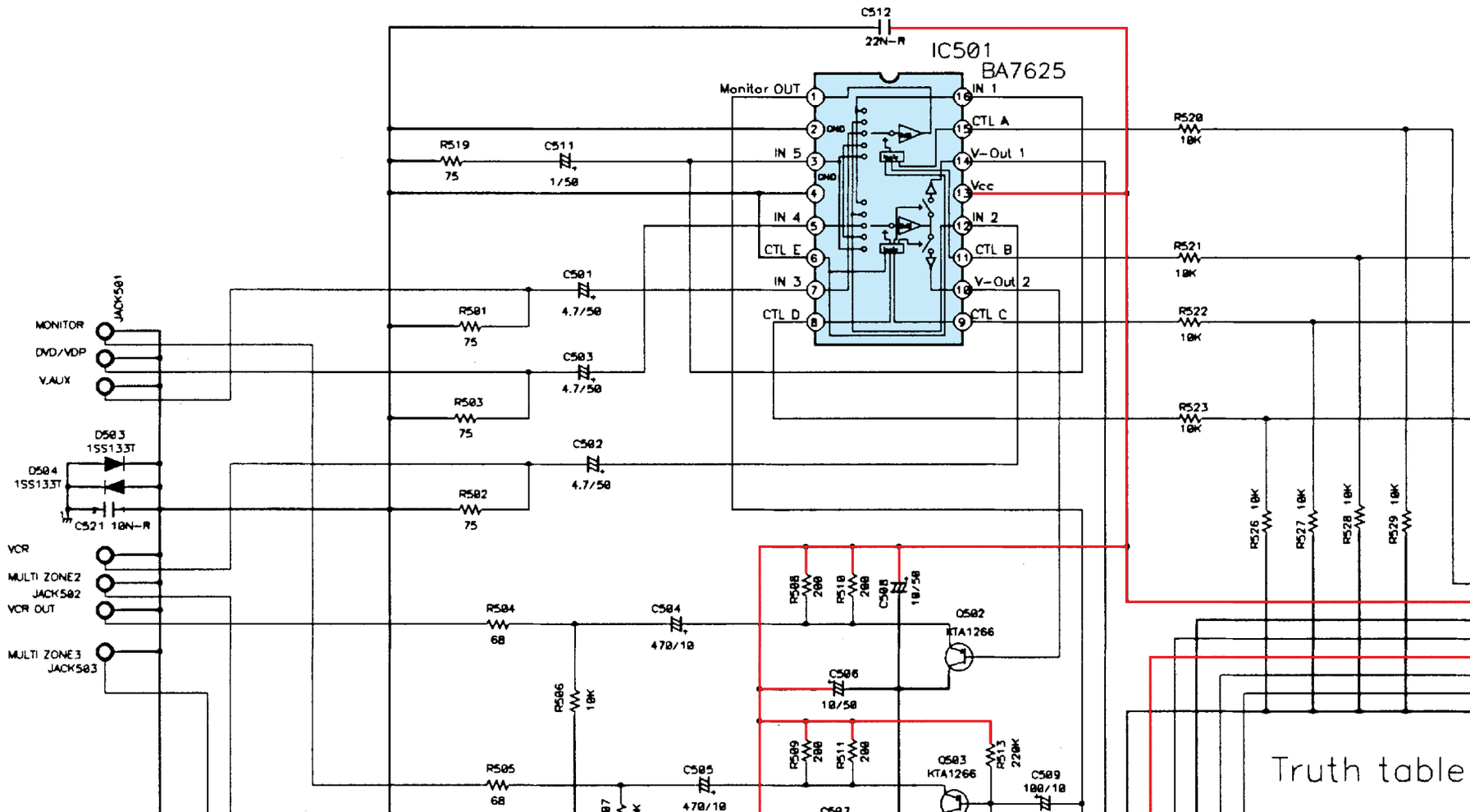

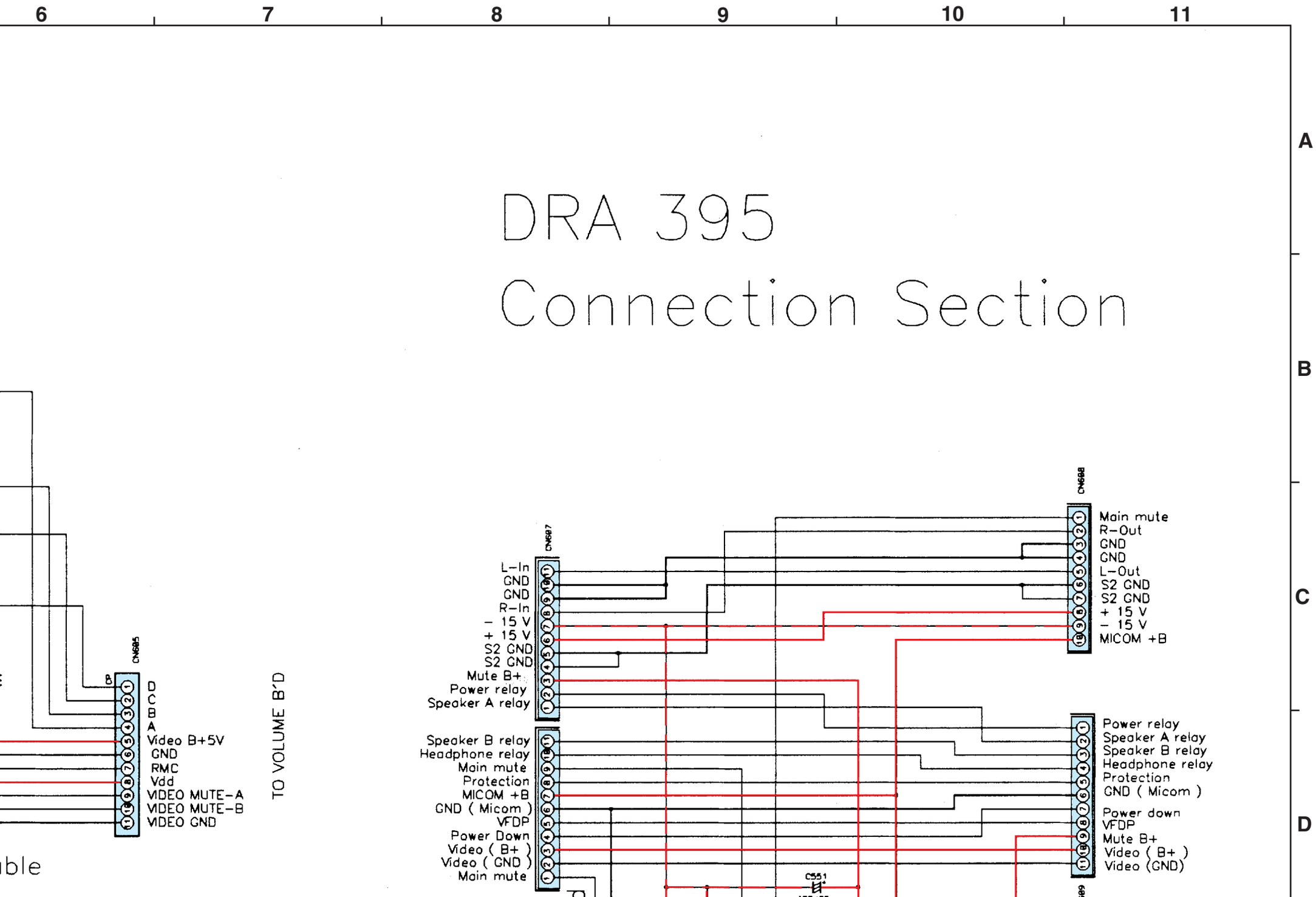
6
7
8
9
10
11
A
B
C
D
DRA 395
Connection Section
CN685
D
C
B
A
Video B+5V
GND
RMC
Vdd
VIDEO MUTE-A
VIDEO MUTE-B
VIDEO GND
TO VOLUME B'D
CN687
L-In
GND
GND
R-In
- 15 V
+ 15 V
S2 GND
S2 GND
Mute B+
Power relay
Speaker A relay
Speaker B relay
Headphone relay
Main mute
Protection
MICOM +B
GND ( Micom )
VFDP
Power Down
Video ( B+ )
Video ( GND )
Main mute
CN688
Main mute
R-Out
GND
GND
L-Out
S2 GND
S2 GND
+ 15 V
- 15 V
MICOM +B
Power relay
Speaker A relay
Speaker B relay
Headphone relay
Protection
GND ( Micom )
Power down
VFDP
Mute B+
Video ( B+ )
Video (GND)
C551

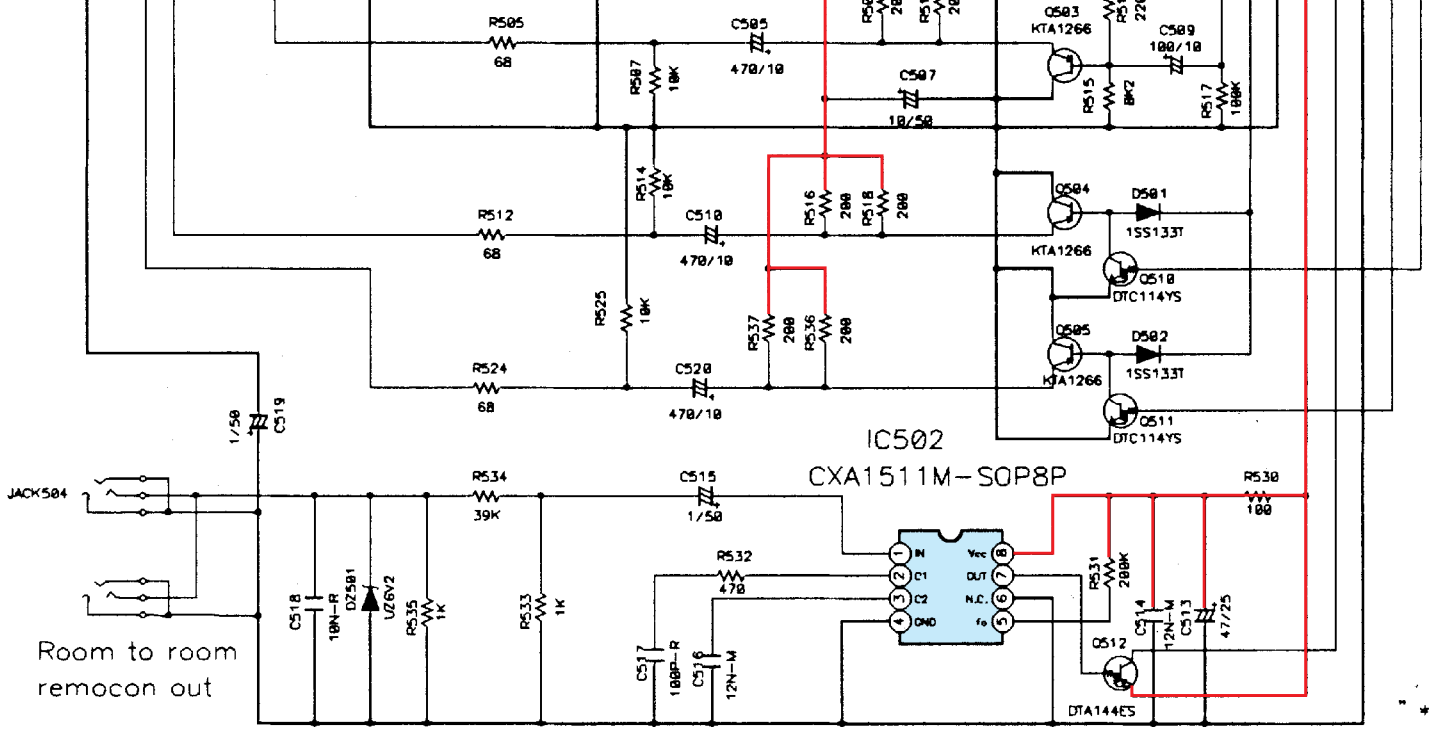


## Truth table

| A | B | E | M |
|---|---|---|---|
| L | L | * | |
| H | L | * | |
| L | H | * | |
| H | H | L | |
| H | H | H | |

| C | D | E | V |
|---|---|---|---|
| L | L | * | |
| H | L | * | |
| L | H | * | |
| H | H | L | |
| H | H | H | |

| C | D | E | V |
|---|---|---|---|
| L | L | * | |
| H | L | * | |
| L | H | * | |
| H | H | L | |
| H | H | H | |

" * " Indicate don't ca

## NOTICE

ALL RESISTANCE VALUES IN OHM. k=1,000 OHM M=1,000,000 OHM
ALL CAPACITANCE VALUES IN MICRO FARAD. P=MICRO-MICRO FARAD
EACH VOLTAGE AND CURRENT ARE MEASUERD AT MO SIGNAL INPUT CONDITION.
CIRCUIT AND PARTS ARE SUBJECT TO CHANGE WITHOUT PRIOR NOTICE.

## WARNING:

Parts marked with this symbol ⚠ ▭ ha
Use ONLY replacement parts recomme

## CAUTION:

Before returning the unit to the custome
leakage current check or (2) a line to ch
current exceeds 0.5 milliamps, or if the
of the power card is less than 460kohms

## WARNING:

DO NOT return the unit to the customer
corrected.

ble

| | | |
|---|---|---|
| E | Monitor out | |
| * | In 1 | |
| * | In 2 (VCR) | |
| * | In 3 (V.AUX) | |
| L | In 4 (DVD) | |
| H | In 5 | |
| E | V Out 1 | |
| * | – | |
| * | In 2 (VCR) | |
| * | In 3 (V.AUX) | |
| L | In 4 (DVD) | |
| H | In 5 | |
| E | V Out 2 | |
| * | In 1 | |
| * | – | |
| * | In 3 (V.AUX) | |
| L | In 4 (DVD) | |
| H | In 5 | |

n't care ( H or L )

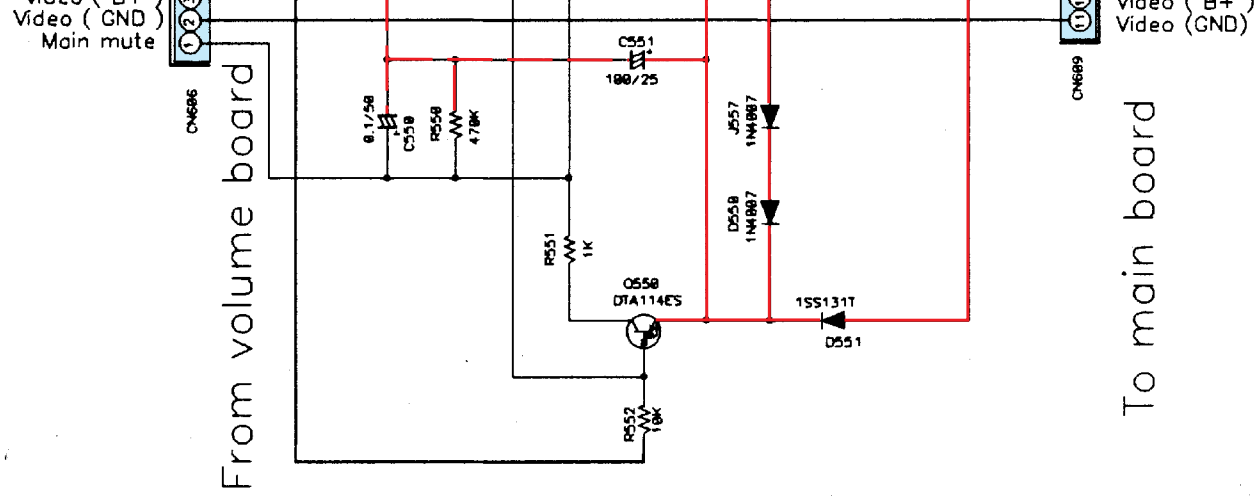


E

F

G

H

have critical characteristics.
commended by the manufacture.

customer, make sure you make either (1) a
ne to chassis resistance check. If the leakage
or if the resistance from chassis to either side
60kohms, the unit is defective.

ustomer until the problem is located and

+ B LINE

– B LINE

## SCHEMATIC DIAGRAMS(4/6)

VIDEO UNIT
CONNECTOR UNIT

## SCHEMATIC DIAGRAMS(5/6)

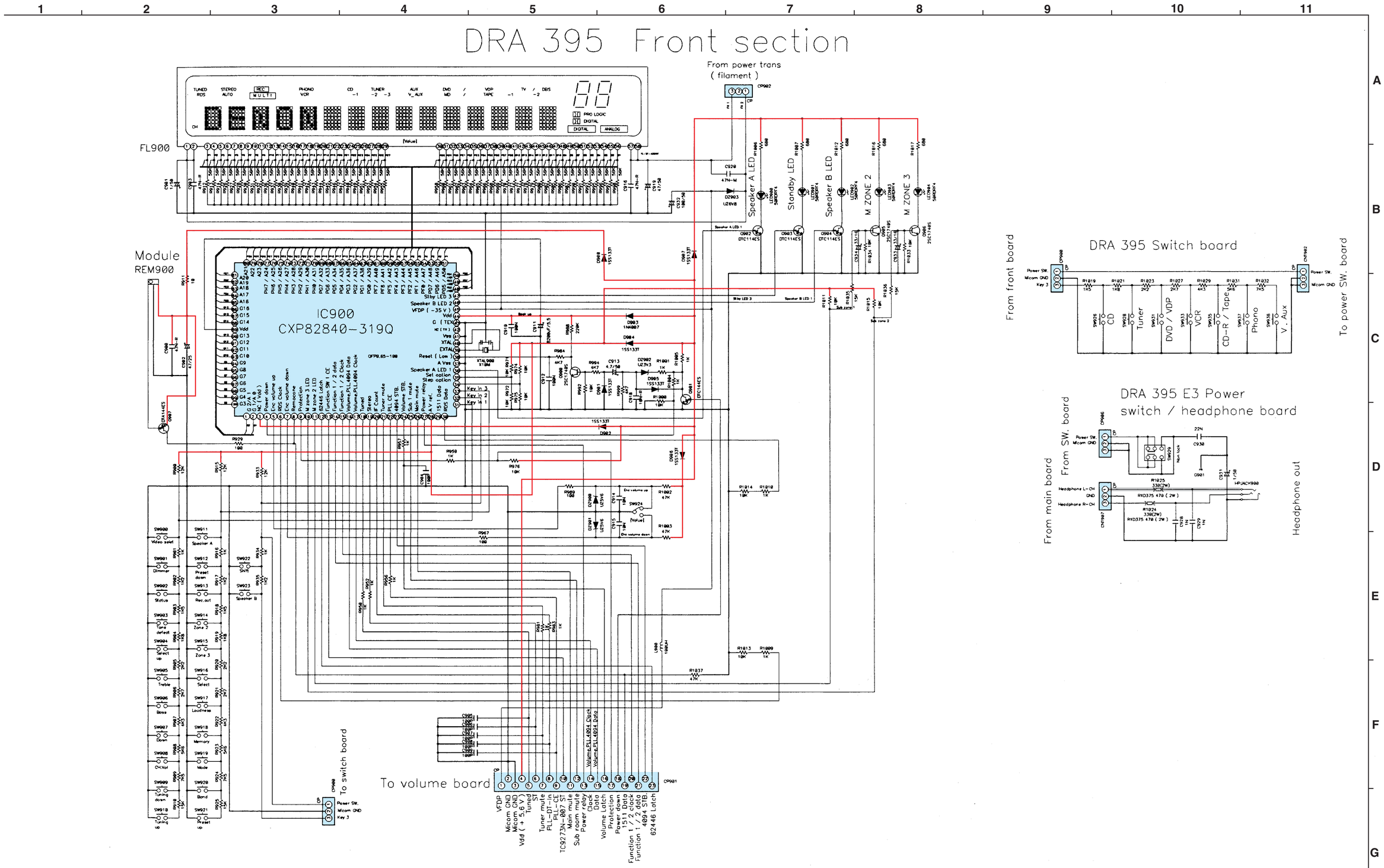


NOTICE
ALL RESISTANCE VALUES IN OHM. k=1,000 OHM M=1,000,000 OHM
ALL CAPACITANCE VALUES IN MICRO FARAD. P=MICRO-MICRO FARAD
EACH VOLTAGE AND CURRENT ARE MEASUERD AT MO SIGNAL INPUT CONDITION.
CIRCUIT AND PARTS ARE SUBJECT TO CHANGE WITHOUT PRIOR NOTICE.

WARNING:
Parts marked with this symbol ⚠ have critical characteristics.
Use ONLY replacement parts recommended by the manufacture.

CAUTION:
Before returning the unit to the customer, make sure you make either (1) a leakage current check or (2) a line to chassis resistance check. If the leakage current exceeds 0.5 milliamps, or if the resistance from chassis to either side of the power card is less than 460kohms, the unit is defective.

WARNING:
DO NOT return the unit to the customer until the problem is located and corrected.

+ B LINE
SIGNAL LINE

SCHEMATIC DIAGRAMS(5/6)
FRONT UNIT
SWITCH UNIT
POWER SW/HP UNIT

## SCHEMATIC DIAGRAMS(5/6)

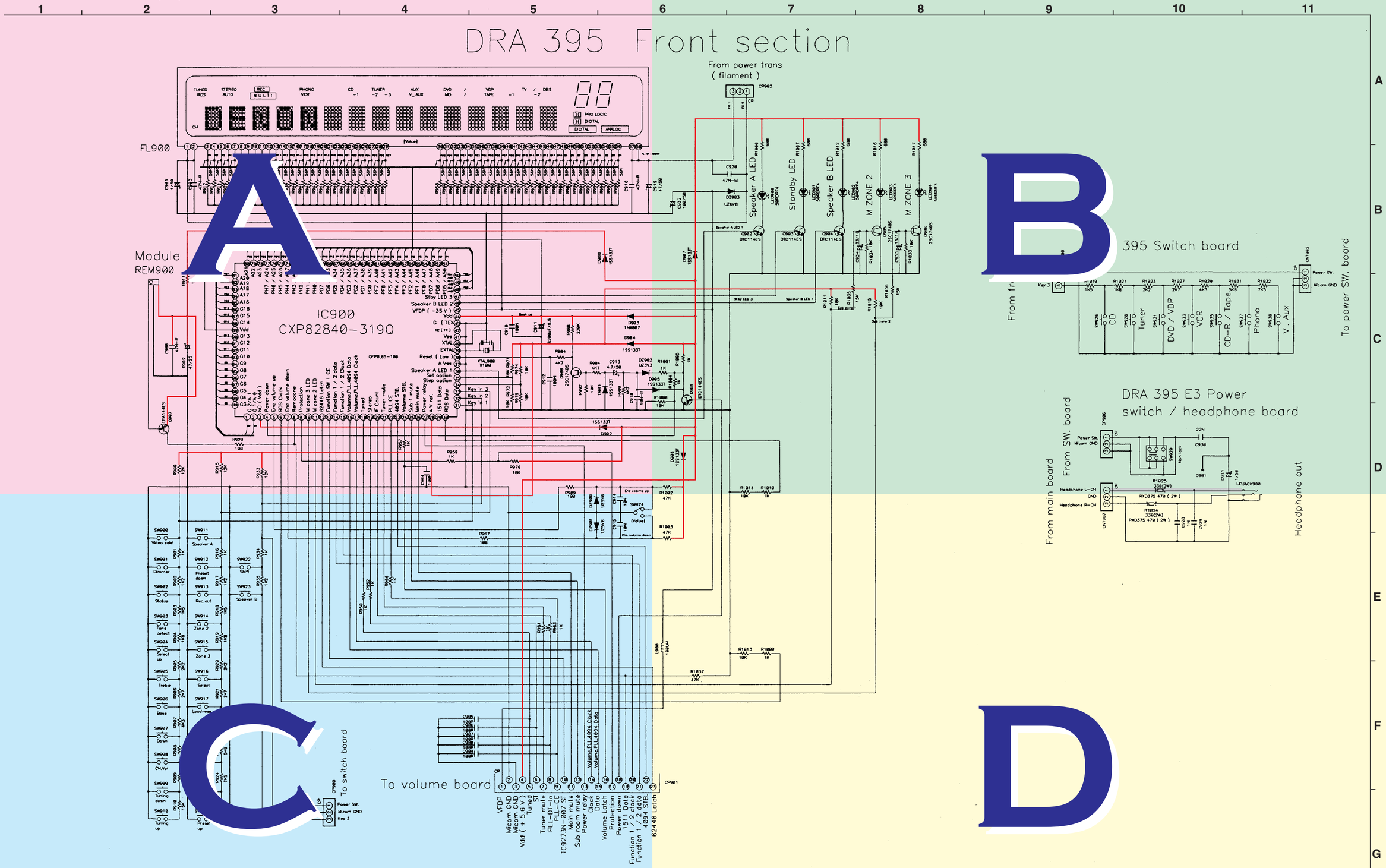


NOTICE
ALL RESISTANCE VALUES IN OHM. k=1,000 OHM M=1,000,000 OHM
ALL CAPACITANCE VALUES IN MICRO FARAD. P=MICRO-MICRO FARAD
EACH VOLTAGE AND CURRENT ARE MEASUERD AT MO SIGNAL INPUT CONDITION.
CIRCUIT AND PARTS ARE SUBJECT TO CHANGE WITHOUT PRIOR NOTICE.

WARNING:
Parts marked with this symbol ⚠ have critical characteristics.
Use ONLY replacement parts recommended by the manufacture.

CAUTION:
Before returning the unit to the customer, make sure you make either (1) a leakage current check or (2) a line to chassis resistance check. If the leakage current exceeds 0.5 milliamps, or if the resistance from chassis to either side of the power card is less than 460kohms, the unit is defective.

WARNING:
DO NOT return the unit to the customer until the problem is located and corrected.

+ B LINE
SIGNAL LINE

SCHEMATIC DIAGRAMS(5/6)
FRONT UNIT
SWITCH UNIT
POWER SW/HP UNIT

## SCHEMATIC DIAGRAMS(5/6)

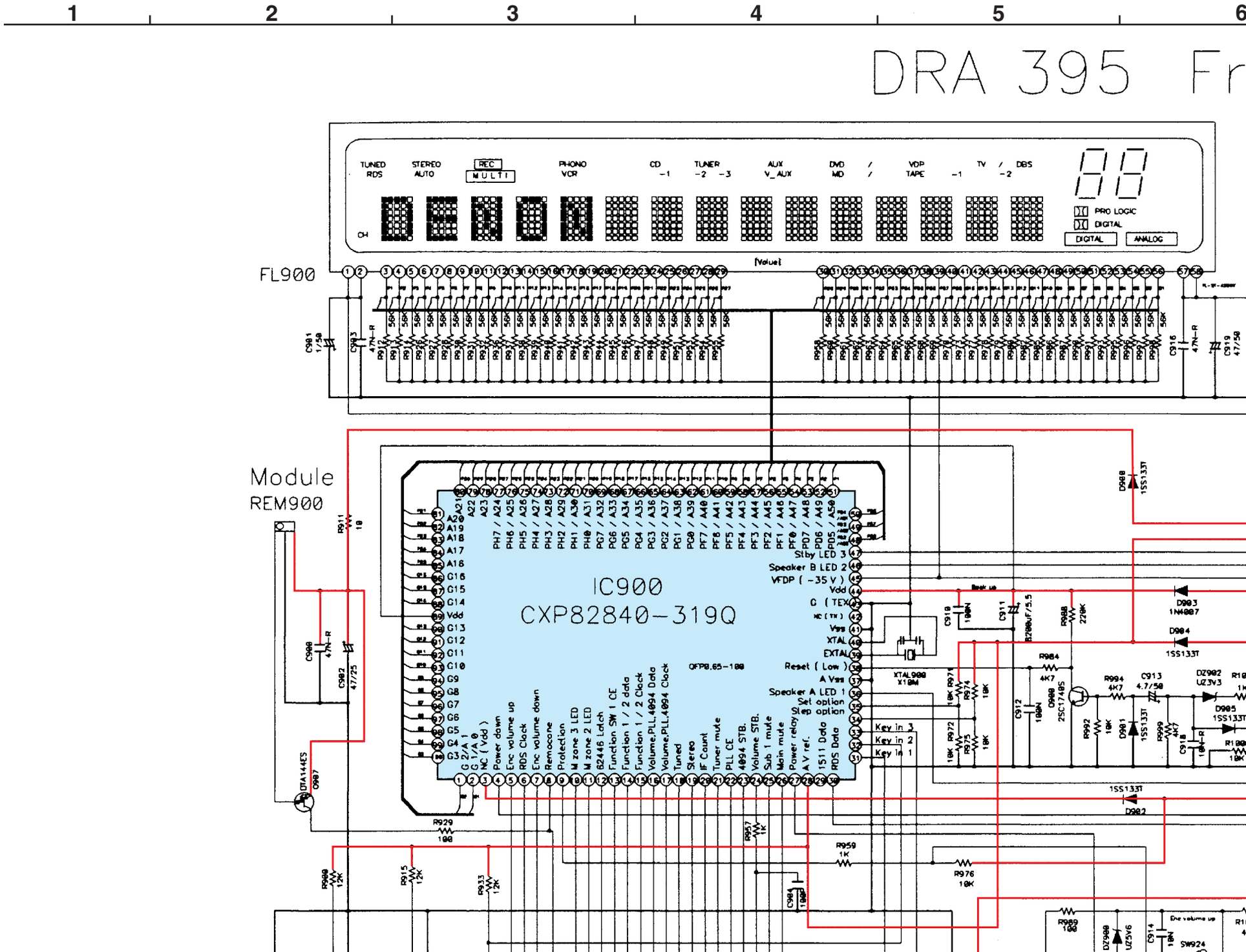

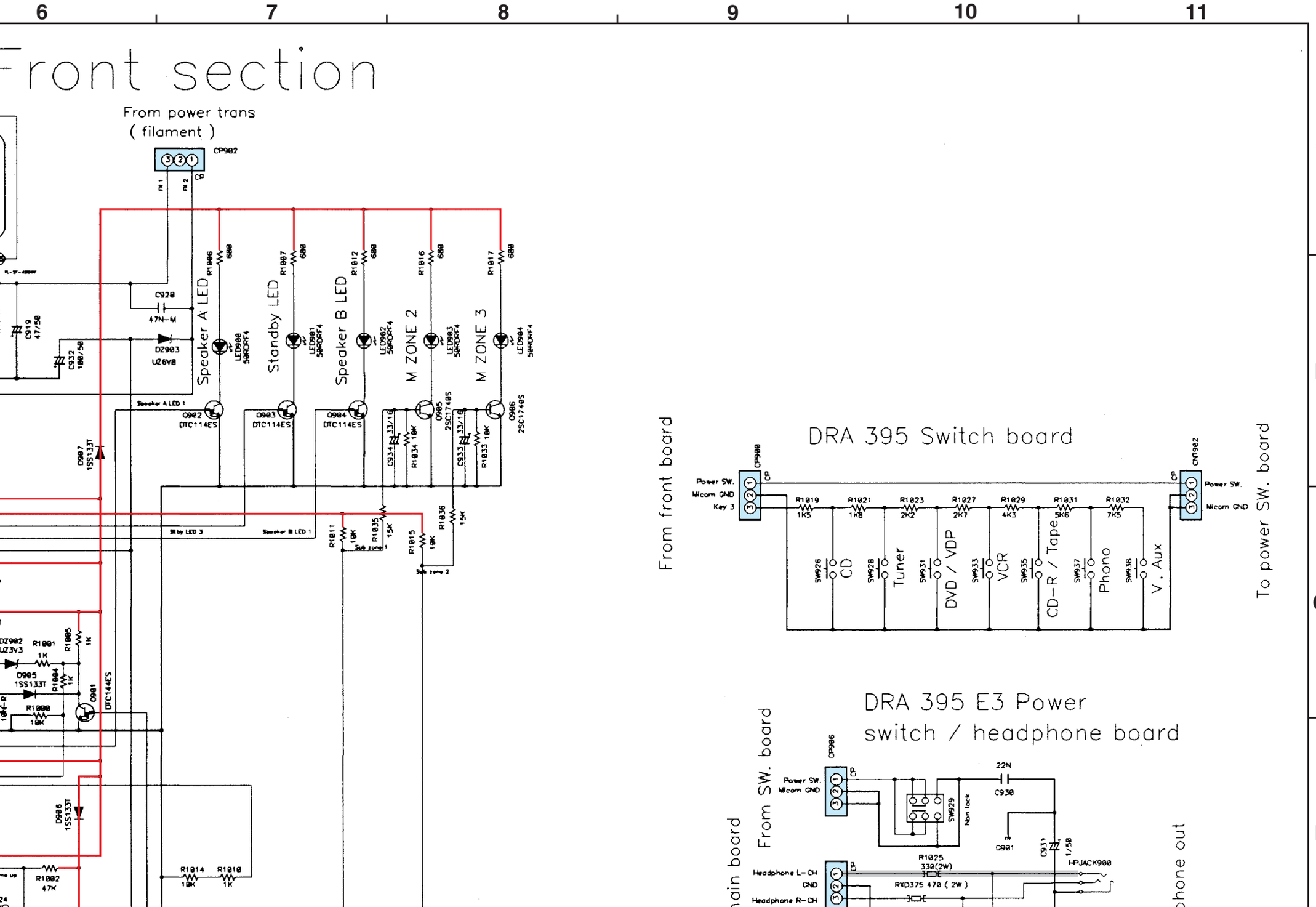
6
7
8
9
10
11
A
B
C
D
Front section
From power trans
( filament )
CP902
Speaker A LED
Standby LED
Speaker B LED
M ZONE 2
M ZONE 3
DRA 395 Switch board
From front board
To power SW. board
Power SW.
Micom GND
Key 3
CD
Tuner
DVD / VDP
VCR
CD-R / Tape
Phono
V. Aux
DRA 395 E3 Power
switch / headphone board
From SW. board
To main board
Headphone out
Headphone L-CH
GND
Headphone R-CH

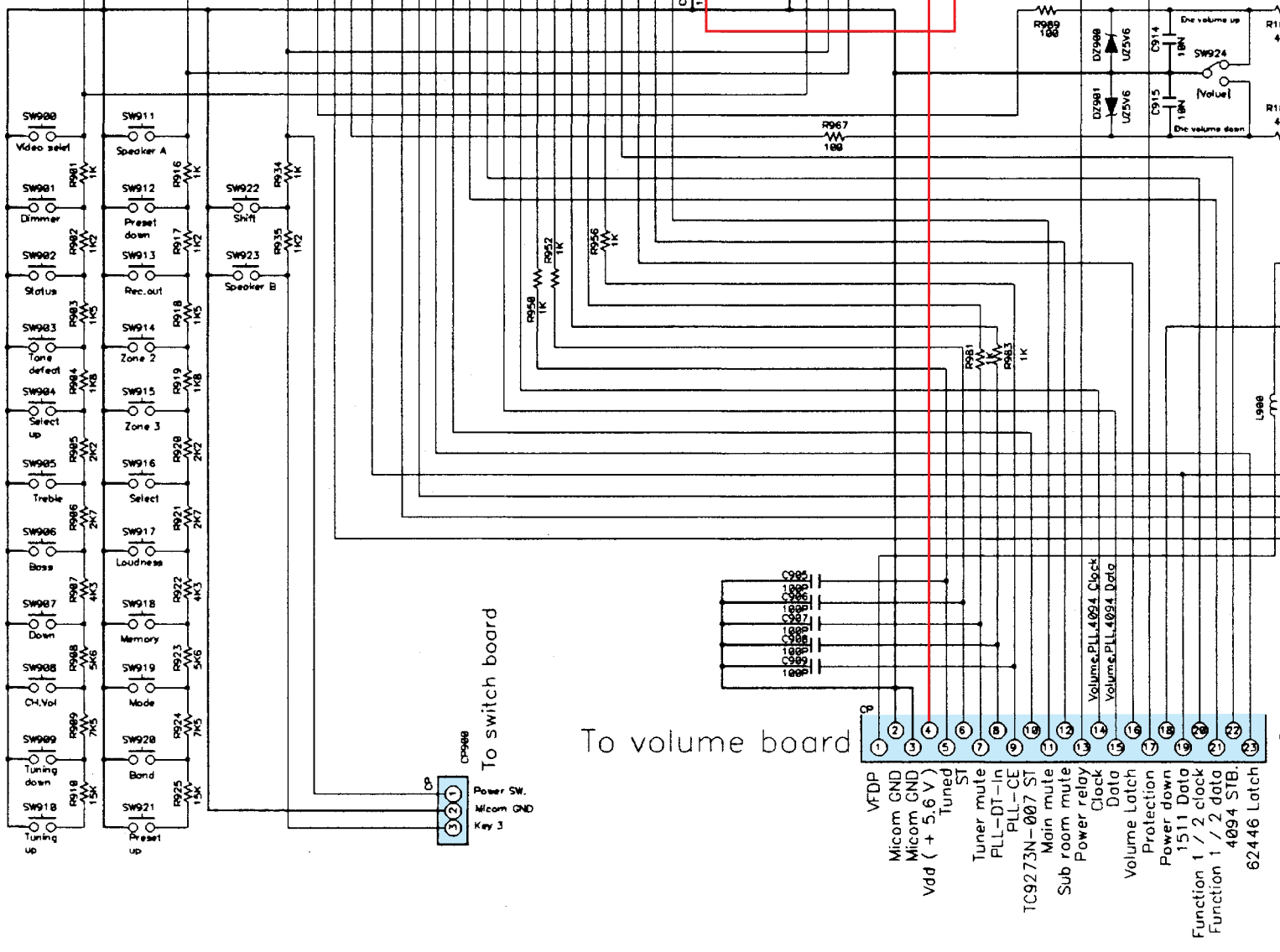


## NOTICE

ALL RESISTANCE VALUES IN OHM. k=1,000 OHM M=1,000,000 OHM
ALL CAPACITANCE VALUES IN MICRO FARAD. P=MICRO-MICRO FARAD
EACH VOLTAGE AND CURRENT ARE MEASUERD AT MO SIGNAL INPUT CONDITION.
CIRCUIT AND PARTS ARE SUBJECT TO CHANGE WITHOUT PRIOR NOTICE.

## WARNING:

Parts marked with this symbol ⚠
Use ONLY replacement parts recomm

## CAUTION:

Before returning the unit to the custom
leakage current check or (2) a line to
current exceeds 0.5 milliamps, or if th
of the power card is less than 460koh

## WARNING:

DO NOT return the unit to the custom
corrected.

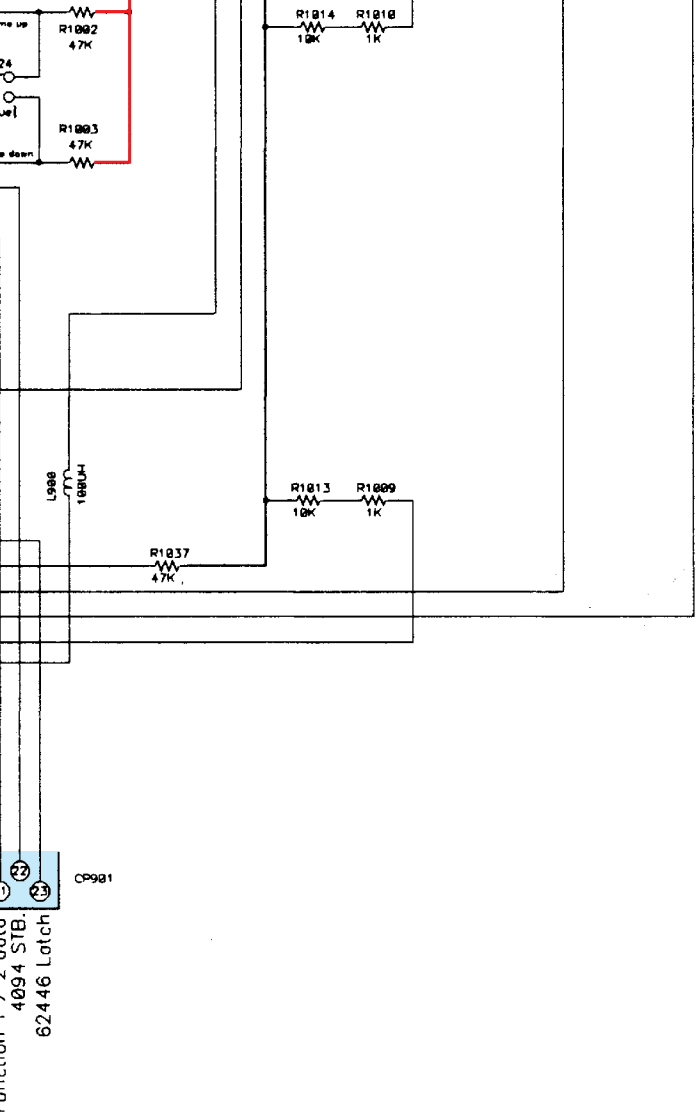


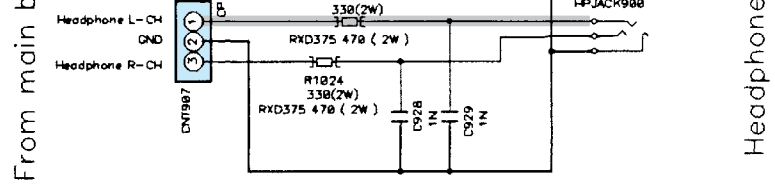


have critical characteristics.
recommended by the manufacture.

e customer, make sure you make either (1) a
line to chassis resistance check. If the leakage
, or if the resistance from chassis to either side
460kohms, the unit is defective.

customer until the problem is located and

+B LINE

SIGNAL LINE

# SCHEMATIC DIAGRAMS(5/6)

FRONT UNIT
SWITCH UNIT
POWER SW/HP UNIT

E

F

G

H

## SCHEMATIC DIAGRAMS(6/6)

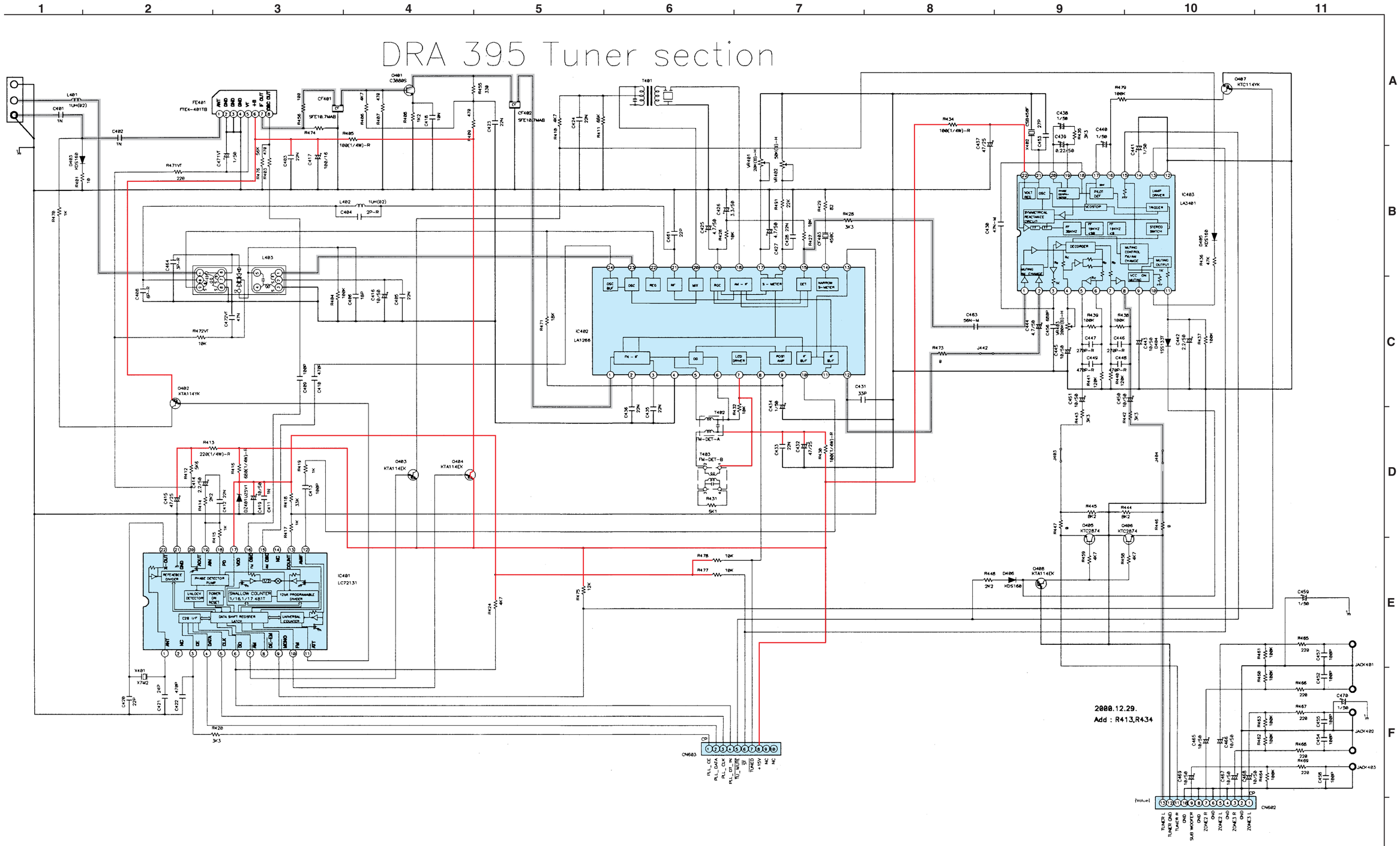


NOTICE
ALL RESISTANCE VALUES IN OHM. k=1,000 OHM M=1,000,000 OHM
ALL CAPACITANCE VALUES IN MICRO FARAD. P=MICRO-MICRO FARAD
EACH VOLTAGE AND CURRENT ARE MEASUERD AT MO SIGNAL INPUT CONDITION.
CIRCUIT AND PARTS ARE SUBJECT TO CHANGE WITHOUT PRIOR NOTICE.

WARNING:
Parts marked with this symbol ⚠ have critical characteristics.
Use ONLY replacement parts recommended by the manufacture.

CAUTION:
Before returning the unit to the customer, make sure you make either (1) a leakage current check or (2) a line to chassis resistance check. If the leakage current exceeds 0.5 milliamps, or if the resistance from chassis to either side of the power card is less than 460kohms, the unit is defective.

WARNING:
DO NOT return the unit to the customer until the problem is located and corrected.

+B LINE
SIGNAL LINE

SCHEMATIC DIAGRAMS(6/6)
TUNER UNIT

## SCHEMATIC DIAGRAMS(6/6)

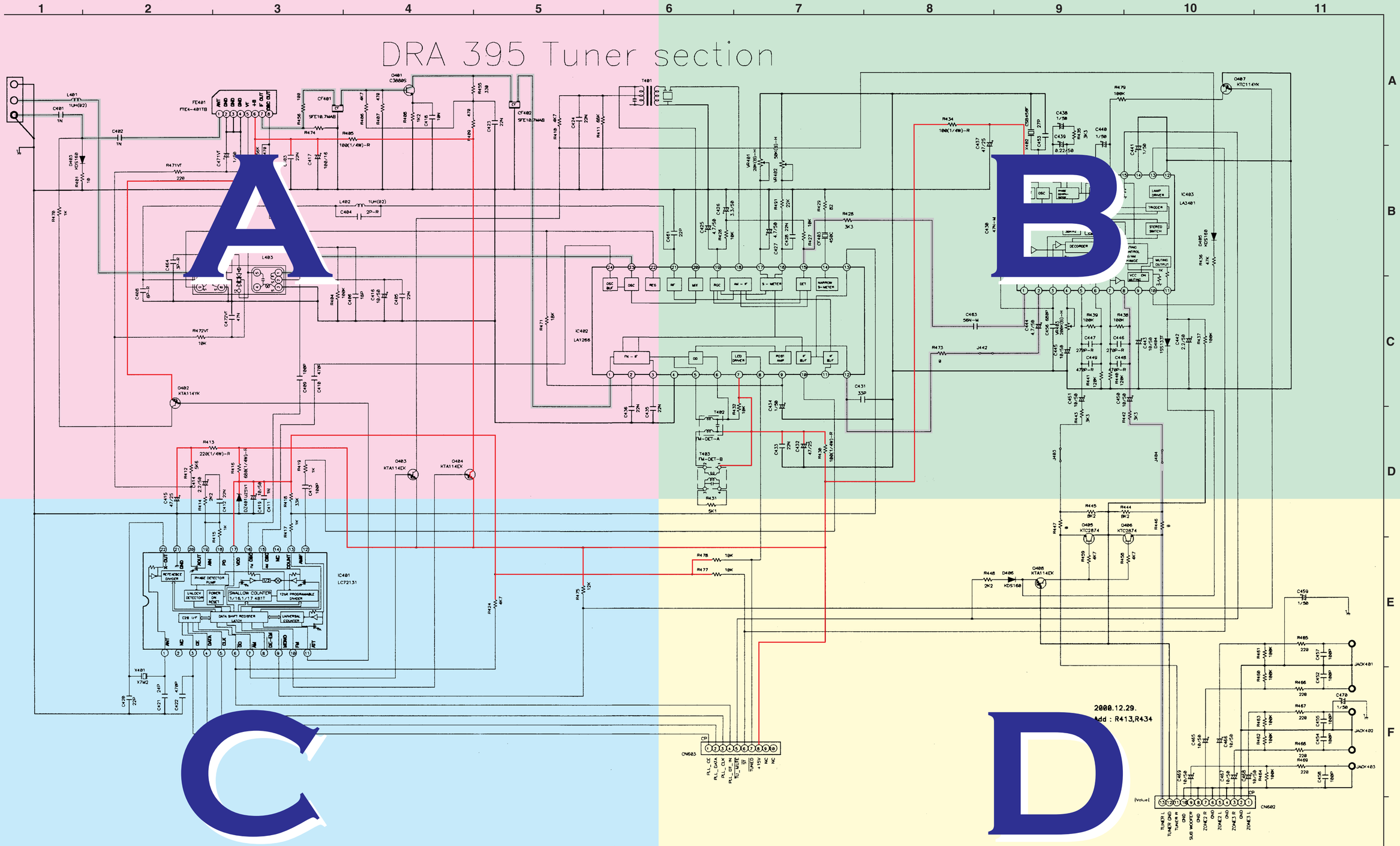


NOTICE
ALL RESISTANCE VALUES IN OHM. k=1,000 OHM M=1,000,000 OHM
ALL CAPACITANCE VALUES IN MICRO FARAD. P=MICRO-MICRO FARAD
EACH VOLTAGE AND CURRENT ARE MEASUERD AT MO SIGNAL INPUT CONDITION.
CIRCUIT AND PARTS ARE SUBJECT TO CHANGE WITHOUT PRIOR NOTICE.

WARNING:
Parts marked with this symbol ⚠ have critical characteristics.
Use ONLY replacement parts recommended by the manufacture.

CAUTION:
Before returning the unit to the customer, make sure you make either (1) a leakage current check or (2) a line to chassis resistance check. If the leakage current exceeds 0.5 milliamps, or if the resistance from chassis to either side of the power card is less than 460kohms, the unit is defective.

WARNING:
DO NOT return the unit to the customer until the problem is located and corrected.

+B LINE
SIGNAL LINE

SCHEMATIC DIAGRAMS(6/6)
TUNER UNIT

## SCHEMATIC DIAGRAMS(6/6)

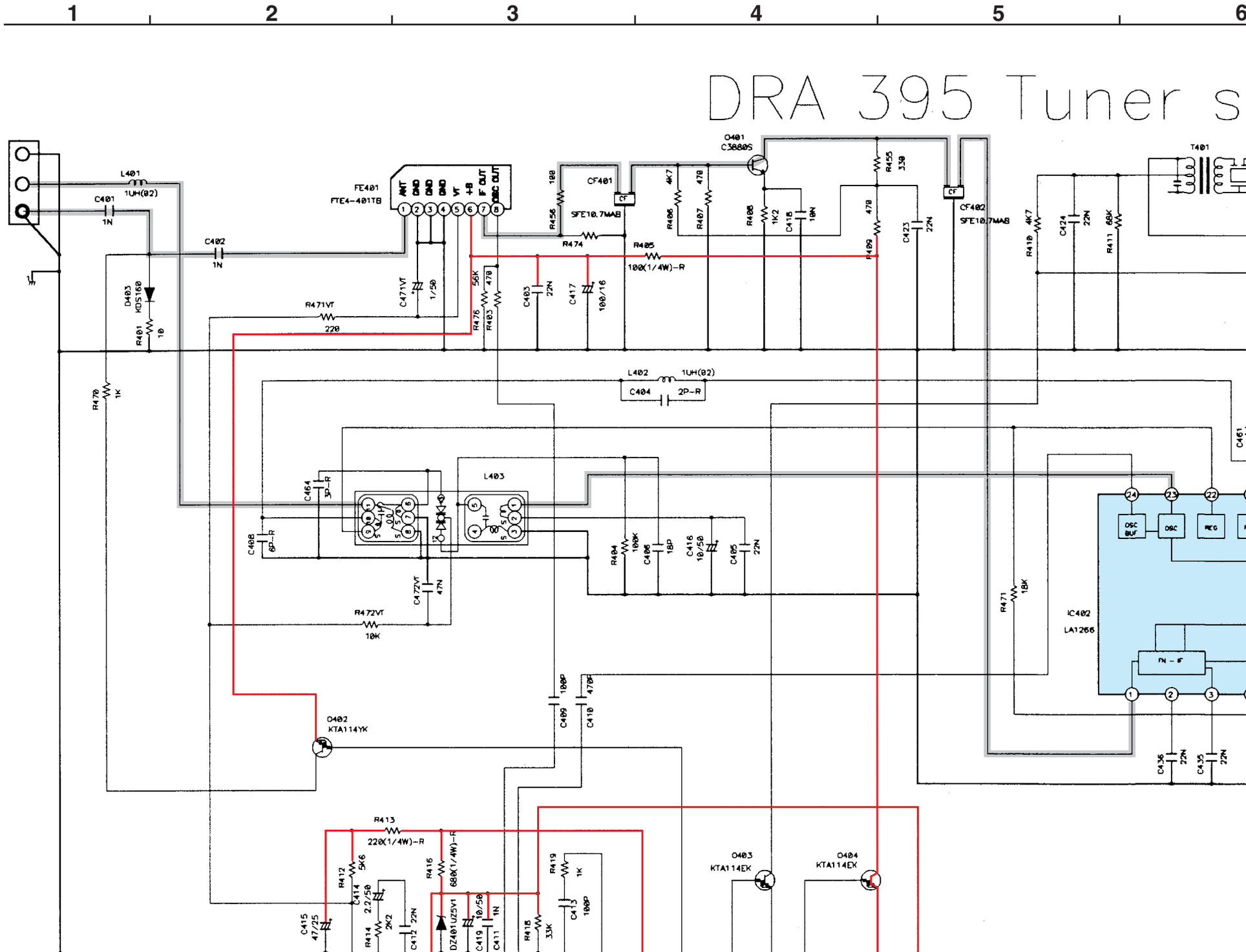

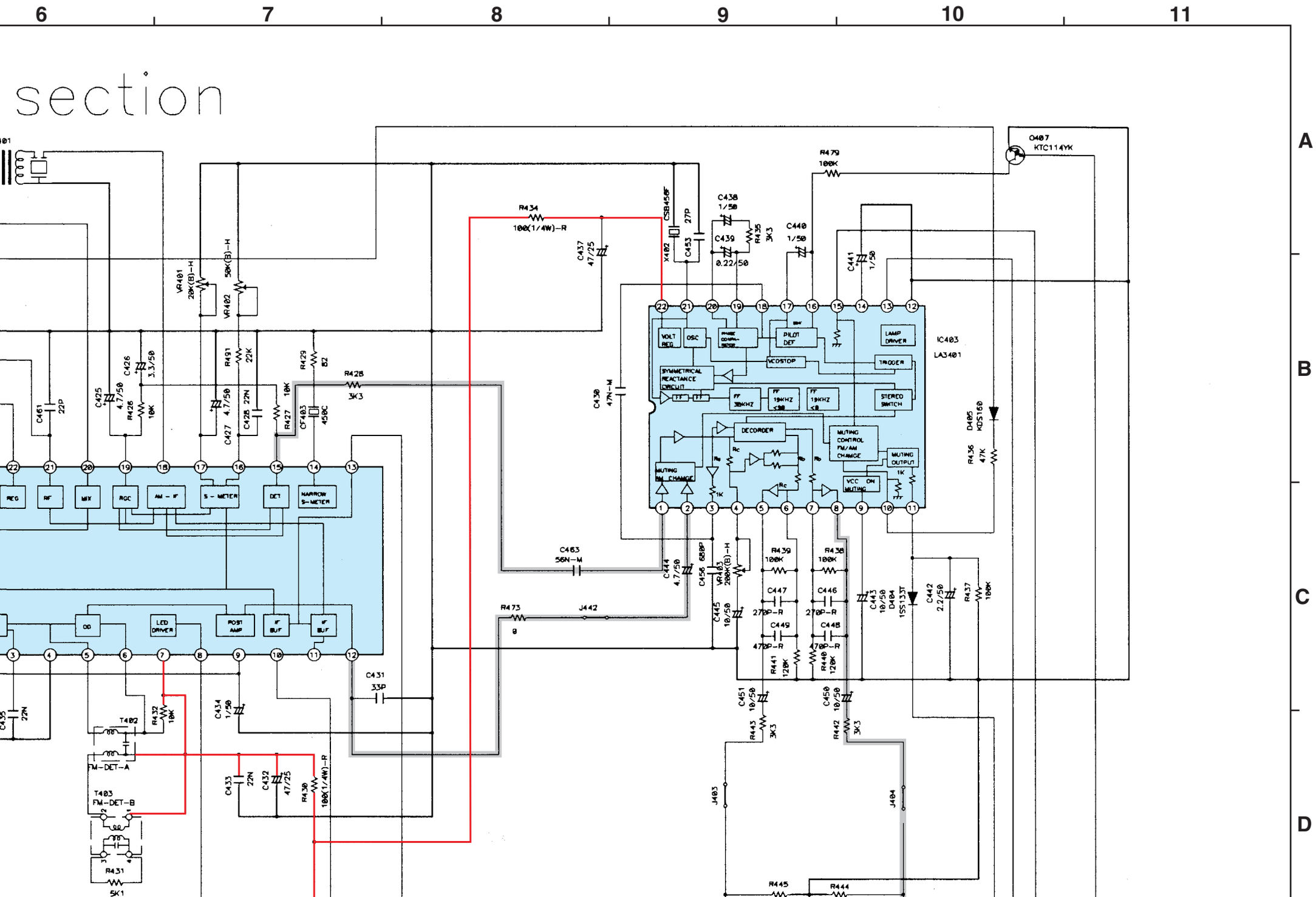
6
7
8
9
10
11
A
B
C
D
section
IC403
LA3401
VOLT REG
OSC
PILOT DET
LAMP DRIVER
VCOSTOP
TRIGGER
SYMMETRICAL REACTANCE CIRCUIT
STEREO SWITCH
DECODER
MUTING CONTROL FM/AM CHANGE
MUTING OUTPUT
MUTING FM CHANGE
VCC ON MUTING
REG
RF
MIX
AGC
AM - IF
S - METER
DET
NARROW S-METER
OD
LED DRIVER
POST AMP
IF BUF
FM-DET-A
FM-DET-B
T402
T403
Q407
KTC114YK
D405
KDS160
D404
1SS133T
X402
CSB456F
CF403
450C
VR401
20K(B)-H
VR402
50K(B)-H
VR403
200K(B)-H
R434
100Ω(1/4W)-R
R479
100K
R428
3K3
R473
8
R431
5K1
R430
100Ω(1/4W)-R
R436
47K
R437
100K
R439
100K
R438
100K
R441
120K
R440
120K
R443
3K3
R442
3K3
R445
R444
C438
1/50
C439
0.22/50
C440
1/50
C441
1/50
C437
47/25
C453
27P
C430
47N-M
C463
56N-M
C444
4.7/50
C456
680P
C445
10/50
C447
270P-R
C446
270P-R
C449
470P-R
C448
470P-R
C443
10/50
C442
2.2/50
C451
10/50
C450
10/50
C431
33P
C434
1/50
C433
22N
C432
47/25
C435
22N
C461
22P
C425
4.7/50
C426
3.3/50
R426
10K
C427
4.7/50
C428
22N
R427
10K
R491
22K
R429
82
J442
J403
J404

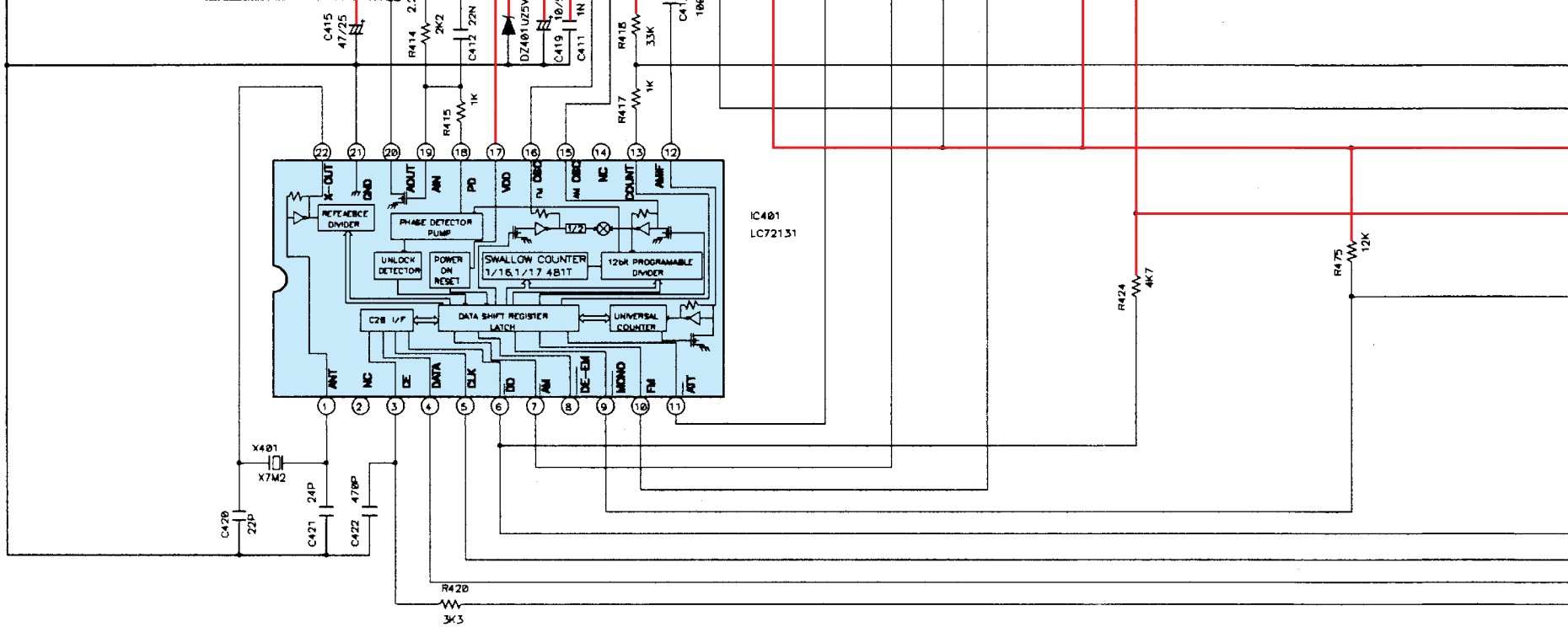


## NOTICE

ALL RESISTANCE VALUES IN OHM. k=1,000 OHM M=1,000,000 OHM
ALL CAPACITANCE VALUES IN MICRO FARAD. P=MICRO-MICRO FARAD
EACH VOLTAGE AND CURRENT ARE MEASUERD AT MO SIGNAL INPUT CONDITION.
CIRCUIT AND PARTS ARE SUBJECT TO CHANGE WITHOUT PRIOR NOTICE.

## WARNING:

Parts marked with this symbol ⚠ ▭ ha
Use ONLY replacement parts recommen

## CAUTION:

Before returning the unit to the customer
leakage current check or (2) a line to cha
current exceeds 0.5 milliamps, or if the re
of the power card is less than 460kohms

## WARNING:

DO NOT return the unit to the customer
corrected.

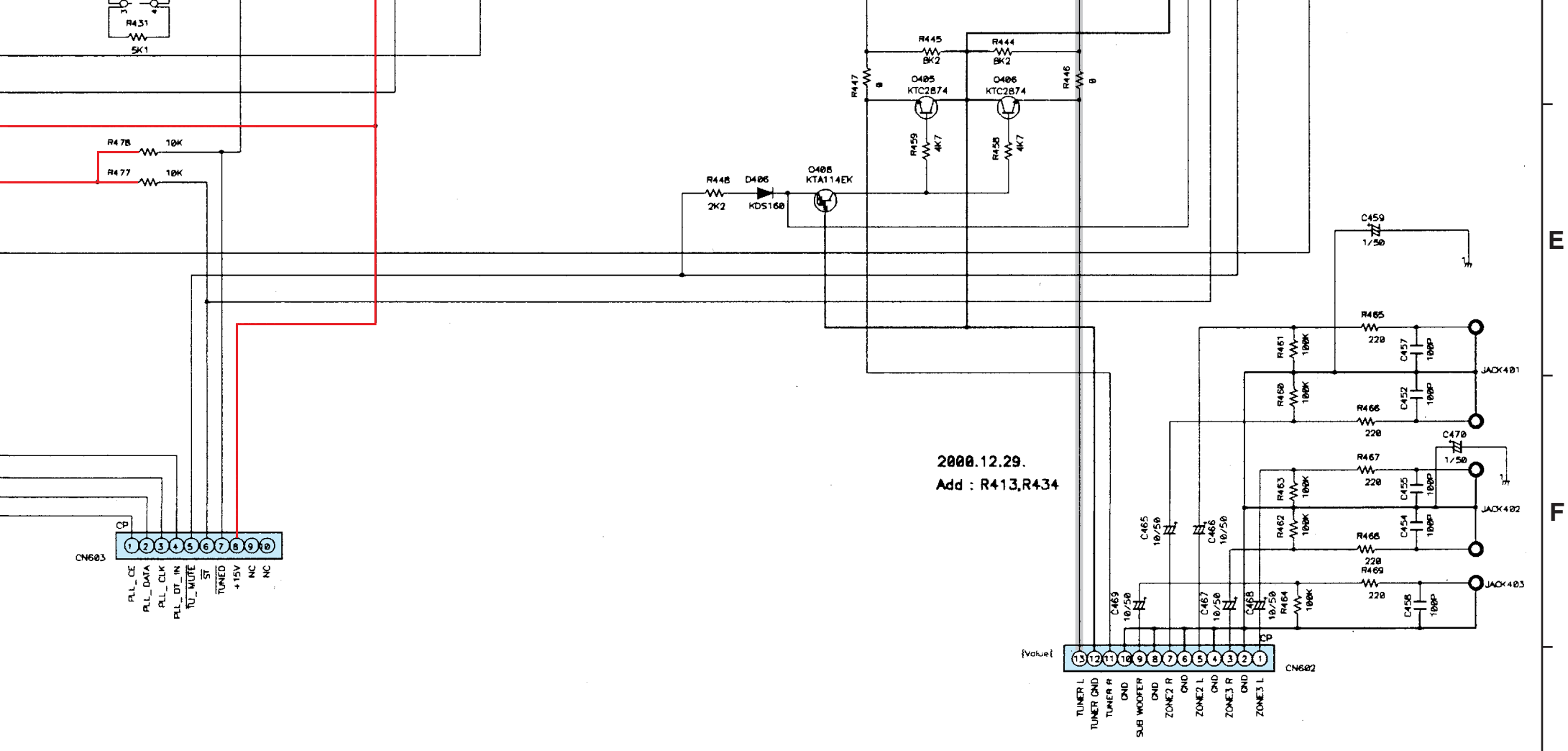


have critical characteristics.
commended by the manufacture.

ustomer, make sure you make either (1) a
ne to chassis resistance check. If the leakage
r if the resistance from chassis to either side
0kohms, the unit is defective.

ustomer until the problem is located and

+B LINE

SIGNAL LINE

# SCHEMATIC DIAGRAMS(6/6)
## TUNER UNIT

# DENON

**For U.S.A., Canada & Europe model**

Hi-Fi AM-FM Stereo Receiver

# SERVICE MANUAL

# MODEL DRA-295

## AM-FM STEREO RECEIVER

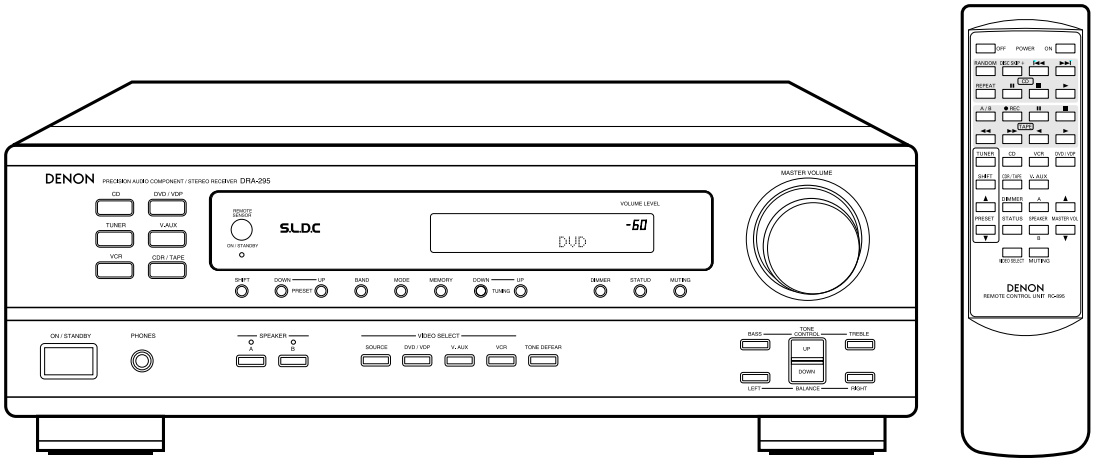





## — TABLE OF CONTENTS —


SAFETY PRECAUTIONS ..... 36
SPECIFICATIONS ..... 36
DISASSEMBLY ..... 37
ADJUSTMENT ..... 38,39
BLOCK DIAGRAM ..... 40
LEVEL DIAGRAM ..... 41
SEMICONDUCTORS ..... 42~46
PRINTED WIRING BOARDS ..... 47~51
NOTE FOR PARTS LIST ..... 52
PARTS LIST OF P.W.B. UNIT ASS'Y ..... 53~59
EXPLODED VIEW ..... 60
PARTS LIST OF EXPLODED VIEW ..... 61,62
PACKING VIEW ..... 63
PARTS LIST OF PACKING & ACCESSORIES ..... 63
WIRING DIAGRAM ..... 64
SCHEMATIC DIAGRAMS ..... 65~69
(1/5) INPUT UNIT ..... 65
VIDEO UNIT ..... 65
(2/5) VOLUME UNIT ..... 66
CONNECTOR UNIT ..... 66
(3/5) MAIN UNIT ..... 67
(4/5) FRONT UNIT ..... 68
SWITCH UNIT ..... 68
POWER SW/HP UNIT ..... 68
(5/5) TUNER UNIT ..... 69


● **Some illustrations using in this service manual are slightly different from the actual set.**


**NIPPON COLUMBIA CO., LTD.**

14-14, AKASAKA 4-CHOME, MINATO-KU, TOKYO 107-8011 JAPAN
Telephone: 03 (3584) 8111

X0118 842 NC 0108

## SAFETY PRECAUTIONS

The following check should be performed for the continued protection of the customer and service technician.

## LEAKAGE CURRENT CHECK

Before returning the unit to the customer, make sure you make either (1) a leakage current check or (2) a line to chassis resistance check. If the leakage current exceeds 0.5 milliamps, or if the resistance from chassis to either side of the power cord is less than 460 kohms, the unit is defective.

## SPECIFICATIONS

- **Audio Section**

**(Power Amplifier)**

| | |
|---|---|
| **Rated output:** | 50W + 50W (8Ω/ohms, 20Hz ~ 20kHz with 0.08% T.H.D.) |
| **Output terminals:** | A or B 4 to 16Ω/ohms |
| | A + B 8 to 16Ω/ohms |

**(Analog)**

**LINE input - PRE OUT**

| | |
|---|---|
| **Input sensitivity/input impedance:** | 200mV/47kΩ/kohms |
| **Frequency response:** | 10Hz ~ 50kHz: ±1.5dB |
| **S/N ratio:** | 98 dB (IHF-A weighted) |
| **Total harmonic distortion:** | 0.009% (–3dB at rated output, 8Ω/ohms) (1kHz) |
| **Rated output:** | 1.2V |

- **Video Section (U.S.A. & Canada model)**

**(Standard Video Jacks)**

| | |
|---|---|
| **Input/output level and impedance:** | 1V p-p, 75Ω/ohms |
| **Frequency response:** | 5Hz ~ 10MHz +1, –3dB |

- **Tuner Section**

| | **[FM]** (note: μV at 75Ω/ohms, 0dBf = $1\times10^{-15}$W) | **[AM]** |
|---|---|---|
| **Receiving range:** | | |
| **U.S.A. & Canada model** | 87.50MHz ~ 107.90MHz | 520kHz ~ 1710kHz |
| **Europe model** | 87.50MHz ~ 108.00MHz | 522kHz ~ 1611kHz |
| **Usable sensitivity:** | 1.4μV (14.2dBf) | 18μV |
| **50dB quieting sensitivity:** | MONO 2.8μV (20.2dBf) | |
| | STEREO 23μV (38.5dBf) | |
| **S/N ratio:** | MONO 80dB (IHF-A weighted) | |
| | STEREO 75dB (IHF-A weighted) | |
| **Total harmonic distortion:** | MONO 0.15% (1kHz) | |
| | STEREO 0.3% (1kHz) | |

- **General**

| | |
|---|---|
| **Power supply:** | AC120V, 60Hz (For U.S.A. & Canada model) |
| | AC230V, 50Hz (For Europe model) |
| **Power consumption:** | 3.0A (For U.S.A. & Canada model) |
| | 150W (For Europe model) |
| **Maximum external dimensions:** | 434 (W) × 147 (H) × 417 (D) mm (17-3/32″ × 5-25/32″ × 16-27/64″) |
| **Weight:** | 9.2kg (20lbs 4.5oz) |

- **Remote Control Unit**

| | |
|---|---|
| | RC-895 (For U.S.A. & Canada model) |
| | RC-907 (For Europe model) |
| **Batteries:** | R06P/AA Type (two batteries) |
| **External dimensions:** | 50 (W) × 179 (H) × 22 (D) mm (1-31/32″ × 7-3/64″ × 55/64″) |
| **Weight:** | 125g (Approx. 7.5 oz) (including batteries) |

* For purposes of improvement, specifications and design are subject to change without notice.

# DISASSEMBLY

(Follow the procedure below in reverse order when reassembling)

## Top Cover

Remove 6 screws ① and 3 screws ②, detach the Top Cover in the arrow direction.

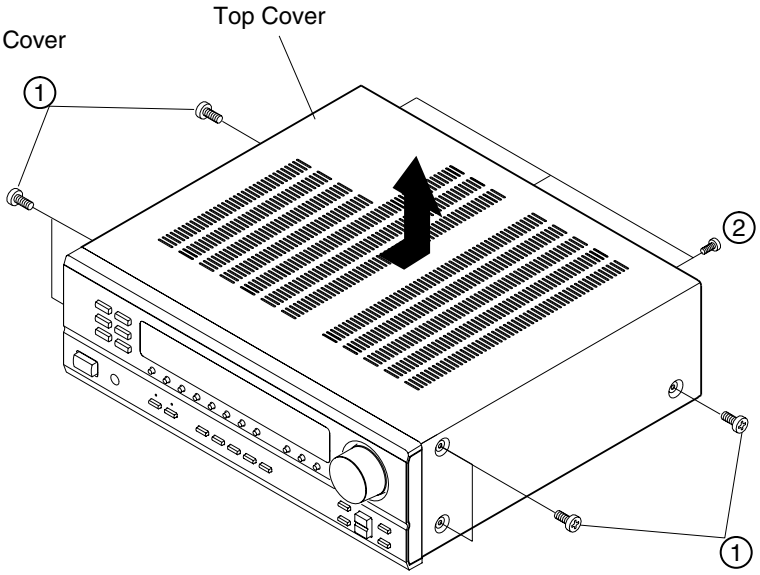


## Front Panel

1. Remove 4 screws ③ and 2 screws ④.
2. Detach the Front Panel in the arrow direction.

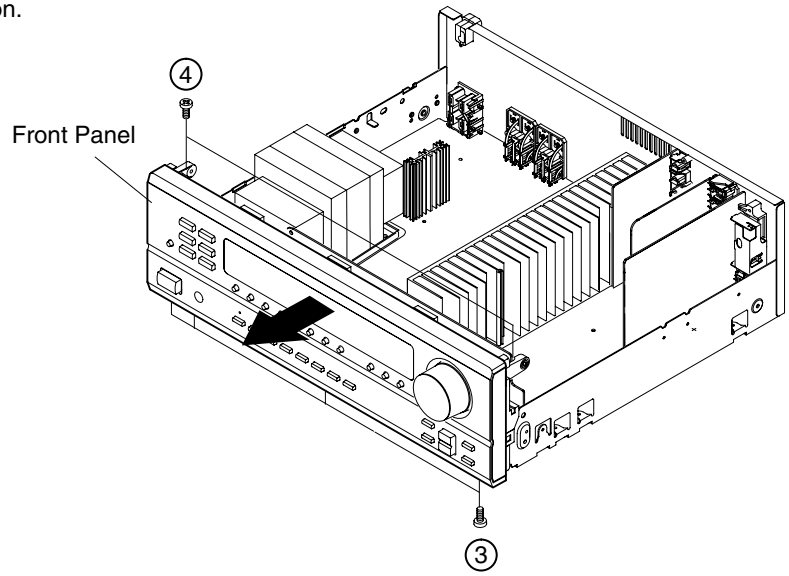


## Rear Panel

**U.S.A. & Canada model**

1. Remove cord bushing ⑤ from the Rear Panel.
2. Remove 23 screws ⑥.
3. Detach the Rear Panel in the arrow direction.

**Europe model**

1. Remove cord bushing ⑤ from the Rear Panel.
2. Remove 17 screws ⑥.
3. Detach the Rear Panel in the arrow direction.

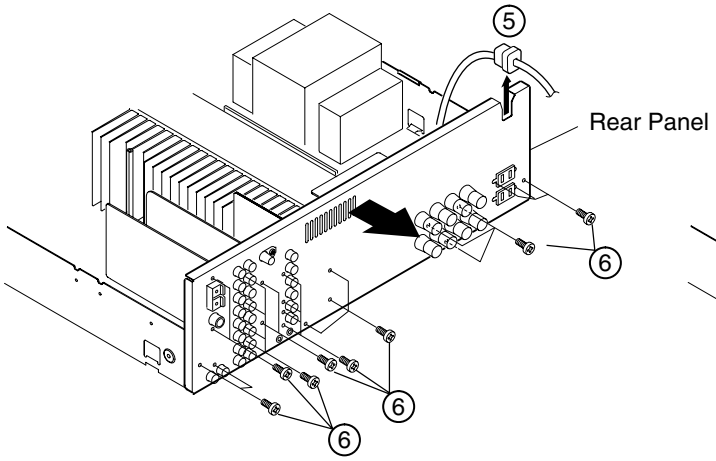


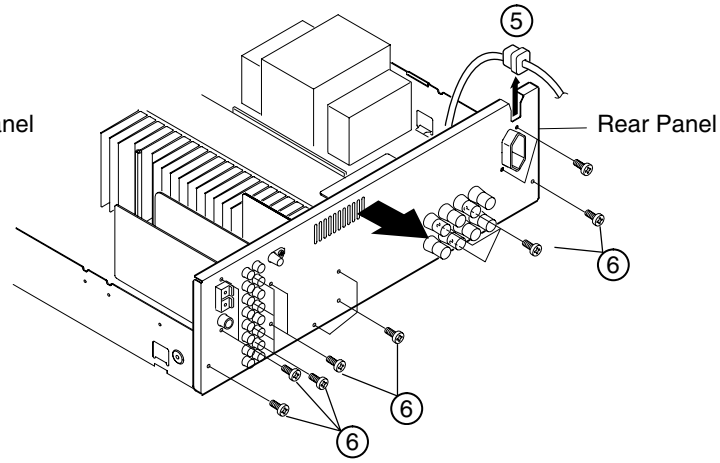

# ADJUSTMENT

## Tuner Section

### CONNECTION DIAGRAM OF MEASURING INSTRUMENTS

● **FM**

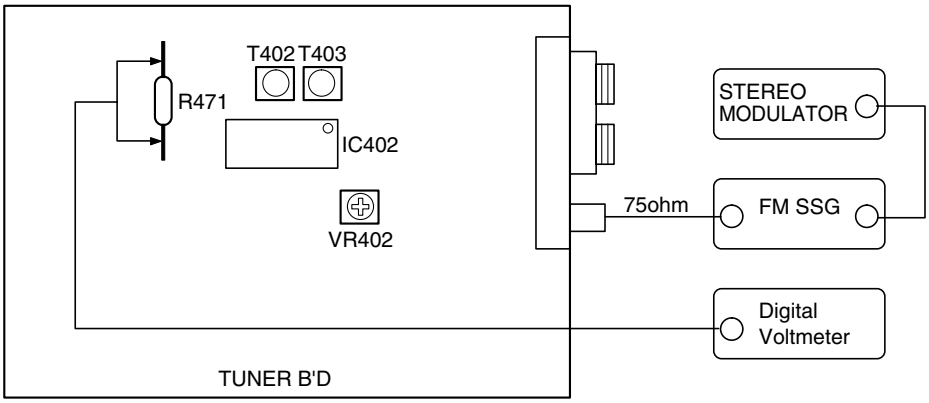


**FM ALIGNMENT**

| Step | Alignment Item | Tuning Frequency Setting | Input | | | | | Output | | Adjustment | |
|---|---|---|---|---|---|---|---|---|---|---|---|
| | | | Type | Frequency | Input Level | Modulation | Coupling | Type | Connect to | Points | Adjust to |
| 1 | Center Adjustment | 98.1MHz (98.0MHz) | FM SSG | 98.1MHz | 60dBμ | Mono 1kHz 100% | Antenna Terminal | Digital Voltmeter | R471 | T402 | ± 50mV |
| 2 | Distortion | 98.1MHz (98.0MHz) | FM SSG | 98.1MHz | 60dBμ | Mono 1kHz 100% | Antenna Terminal | Distortion Meter | Output Terminal (L) | T403 | Minimum Distortion |
| 3 | Repeat Steps 1 and 2 | | | | | | | | | | |
| 4 | Signal Level | 98.1MHz (98.0MHz) | FM SSG | 98.1MHz | 20dBμ | OFF | Antenna Terminal | Light "TUNED" on FL Display | | VR402 | $20^{+14}_{-10}$ dB |

● **AM**

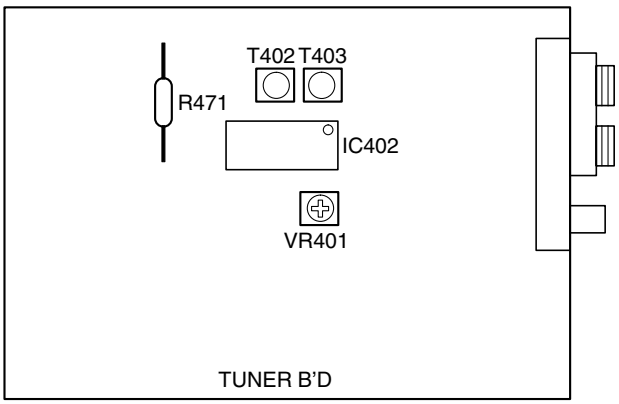


**AM ALIGNMENT**

| Step | Alignment Item | Frequency | Input | Output | | Adjustment | | Remarks |
|---|---|---|---|---|---|---|---|---|
| | | | | Type | Connect to | Points | Adjust to | |
| 1 | Signal Level | 999 (1000) kHz | AM SSG | — | — | VR401 | Light "TUNED" on FL Display | SSG OUTPUT 74dBμ (EMF) |

## Audio Section

### Idling Current

Required measurement equipment : DC Voltmeter

### Preparation

(1) Avoid direct blow from an air conditioner or an electric fan, and adjust the unit at normal room tempereture 15 °C ~ 30 °C (59 °F ~ 86 °F).

(2) Presetting
- POWER (Power sourse switch) → OFF
- SPEAKER (Speaker terminal) → No load (Do not connect speaker, dummy resistor, etc.)

### Adjustment

(1) Remove top cover and set VR101, VR102 on Amp. Unit at full counterclockwise ( ) position.

(2) Connect DC Voltmeter to test points (Lch: TP101, Rch: TP102).

(3) Connect power cord to AC Line, and turn power switch "ON".

(4) Presetting. MASTER VOLUME : "---" counterclockwise ( min.)
FUNCTION : CD

(5) Within 2 minutes after the power on, turn VR101 clockwise ( ) to adjust the TEST POINT voltage to 1.5 mV ±0.5 mV DC.

(6) After 10 minutes from the preset above, turn VR101 to set the voltage to 2.5 mV ±0.5 mV DC.

(7) Adjust the Variable Resistors of other channels in the same way.

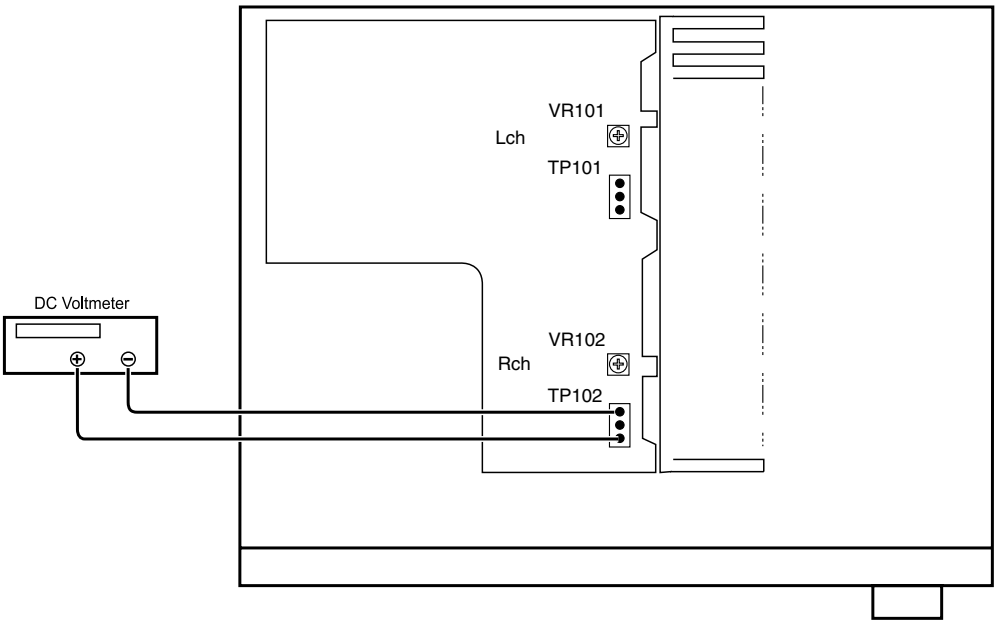

## BLOCK DIAGRAM

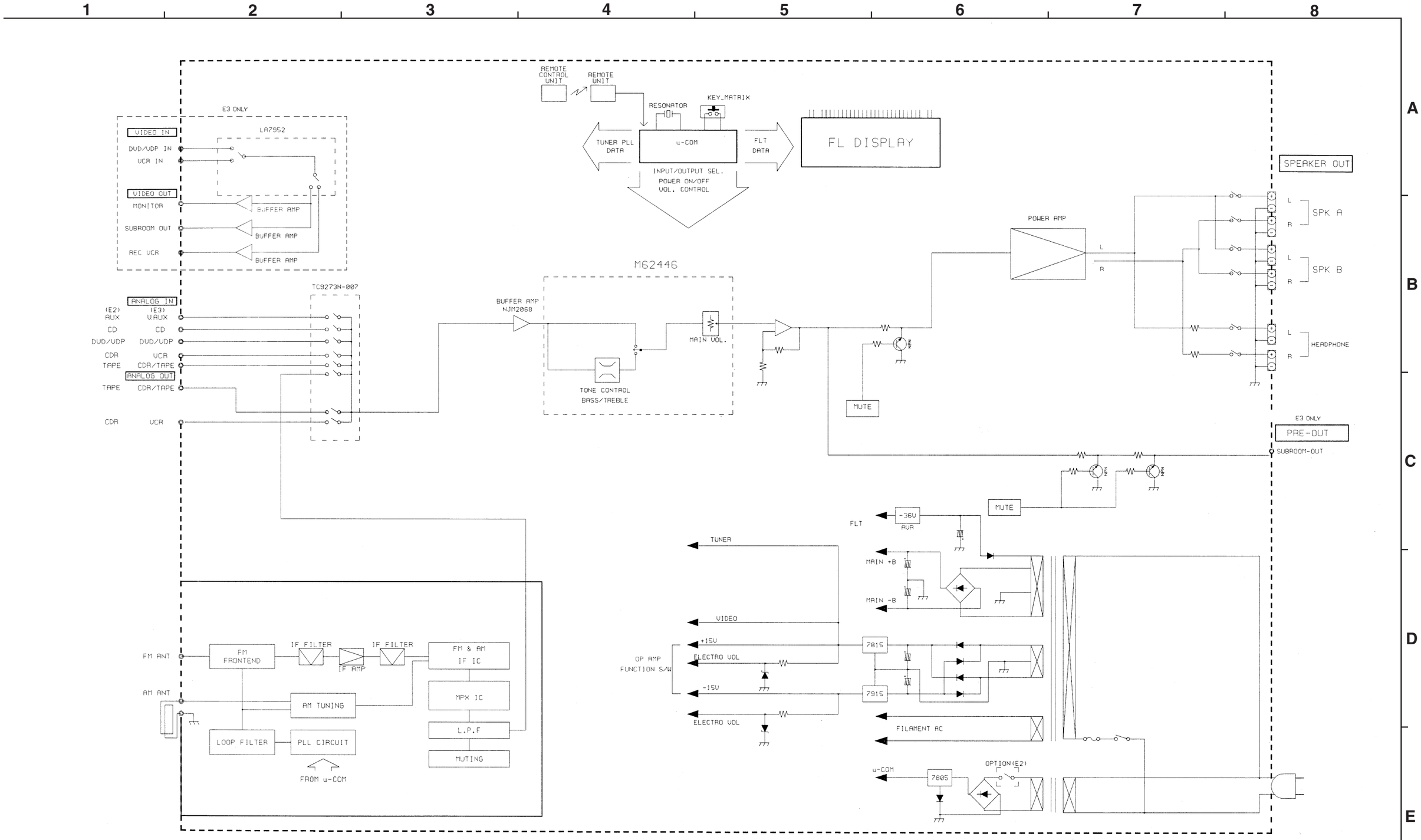

## LEVEL DIAGRAM

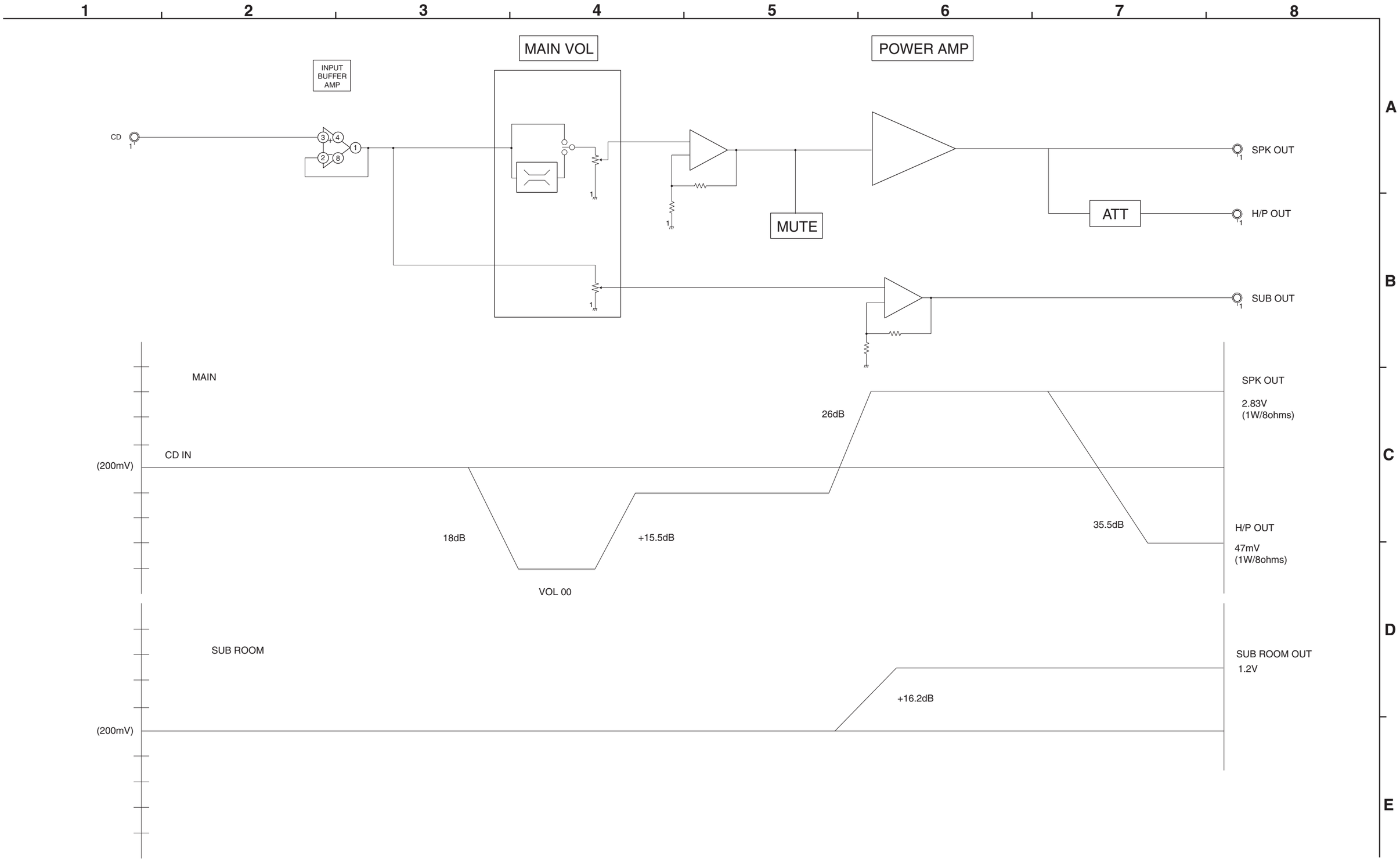

# SEMICONDUCTORS

## ● IC's

### CXP82840-321Q (IC900)

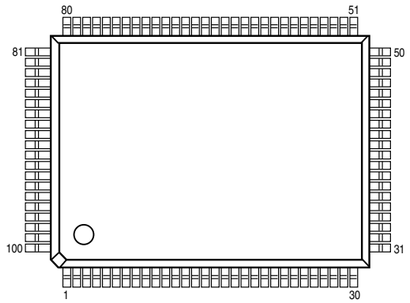


### CXP82840-321Q Terminal Function

| Pin No. | Pin Name | I/O | Function |
|---|---|---|---|
| 1 | G2/A1 | O | FL G02 |
| 2 | G1/A0 | O | FL G01 |
| 3 | NC(Vdd) | I | NC(Connect to Vdd) |
| 4 | POWER DOWN | I | AC OFF Detect |
| 5 | ENC VOLUME UP | I | Encoder VOLUME UP |
| 6 | RDS CLOCK | I | RDS clock input(TDA7330) |
| 7 | ENC VOLUME DOWN | I | Encoder VOLUME DOWN |
| 8 | REMOCON | I | Remote signal input. |
| 9 | PROTECTION | I | Protection detecting input. |
| 10 | SUB ZONE2 LED | O | Not used. |
| 11 | SUB ZONE1 LED | O | Not used. |
| 12 | 62446 LATCH | O | Electronic volume control.(M62446 LATCH) |
| 13 | FUNCTION SW 1 CE | O | Function IC control.(TC9273 ST) |
| 14 | FUNCTION 1/2 DATA | O | Function IC control.(TC9273 DATA) |
| 15 | FUNCTION 1/2 CLOCK | O | Function IC control.(TC9273 CLOCK) |
| 16 | VOLUME,PLL,4094,DATA | O | LC72131,M62446,TC4094(DATA) |
| 17 | VOLUME,PLL,4094,CLOCK | O | LC72131,M62446,TC4094(CLOCK) |
| 18 | TUNED | I | TUNED signal in. |
| 19 | STEREO | I | STEREO signal in. |
| 20 | IF COUNT | I | PLL data in.(LC72131) |
| 21 | TUNER MUTE | O | Tuner mute output. |
| 22 | PLL CE | O | LC72131(CE) |
| 23 | 4094 STB | O | TC4094(STB) |
| 24 | VOLUME STB | O | Not used. |
| 25 | SUB 1 MUTE | O | Not used. |
| 26 | MAIN MUTE | O | MAIN,Subwoofer mute output. |
| 27 | POWER RELAY | O | Power supply relaycontrol. |
| 28 | AV REF. | I | Reference voltage input for A/D converter. |
| 29 | 1511 DATA | O | Not used. |
| 30 | RDS DATA | I | RDS data input(TDA7330) |
| 31 | KEY IN 1 | I | Key input 1 |
| 32 | KEY IN 2 | I | Key input 2 |
| 33 | KEY IN 3 | I | Key input 3 |
| 34 | STEP OPTION | I | Area select. |
| 35 | SET OPTION | I | Model select. |
| 36 | SPEAKER A LED 1 | O | SPEAKER A LED indicator control |
| 37 | A VSS | I | A/D converter GND. |
| 38 | RESET | I | Low-level active,system reset. |
| 39 | EXTAL | I | EXTAL(10MHz) |
| 40 | XTAL | O | XTAL(10MHz) |
| 41 | VSS | I | GND |
| 42 | NC(TX) | O | Not used. |
| 43 | G(TEX) | I | GND |
| 44 | VDD | I | Vcc SUPPLY. |
| 45 | VFDP | I | FDP voltage supply. |
| 46 | SPEAKER B LED 2 | O | SPEAKER B LED indicator control |
| 47 | STBY LED 3 | O | STANDBY LED indicator control |
| 48 | PD2/A53 | O | FL P38 |
| 49 | PD3/A52 | O | FL P37 |
| 50 | PD4/A51 | O | FL P36 |
| 51 | PD5/A50 | O | FL P01 |
| 52 | PD6/A49 | O | FL P02 |
| 53 | PD7/A48 | O | FL P03 |
| 54 | PF0/A47 | O | FL P04 |
| 55 | PF1/A46 | O | FL P05 |
| 56 | PF2/A45 | O | FL P06 |
| 57 | PF3/A44 | O | FL P07 |
| 58 | PF4/A43 | O | FL P08 |
| 59 | PF5/A42 | O | FL P09 |
| 60 | PF6/A41 | O | FL P10 |
| 61 | PF7/A40 | O | FL P11 |
| 62 | PG0/A39 | O | FL P12 |
| 63 | PG1/A38 | O | FL P13 |
| 64 | PG2/A37 | O | FL P14 |
| 65 | PG3/A36 | O | FL P15 |
| 66 | PG4/A35 | O | FL P16 |
| 67 | PG5/A34 | O | FL P17 |
| 68 | PG6/A33 | O | FL P18 |
| 69 | PG7/A32 | O | FL P19 |
| 70 | PH0/A31 | O | FL P20 |
| 71 | PH1/A30 | O | FL P21 |
| 72 | PH2/A29 | O | FL P22 |
| 73 | PH3/A28 | O | FL P23 |
| 74 | PH4/A27 | O | FL P24 |
| 75 | PH5/A26 | O | FL P25 |
| 76 | PH6/A25 | O | FL P26 |
| 77 | PH7/A24 | O | FL P27 |
| 78 | A23 | O | FL P28 |
| 79 | A22 | O | FL P29 |
| 80 | A21 | O | FL P30 |
| 81 | A20 | O | FL P31 |
| 82 | A19 | O | FL P32 |
| 83 | A18 | O | FL P33 |
| 84 | A17 | O | FL P34 |
| 85 | A16 | O | FL P35 |
| 86 | G16 | O | FL G16 |
| 87 | G15 | O | FL G15 |
| 88 | G14 | O | FL G14 |
| 89 | Vdd | I | Vcc SUPPLY. |
| 90 | G13 | O | FL G13 |
| 91 | G12 | O | FL G12 |
| 92 | G11 | O | FL G11 |
| 93 | G10 | O | FL G10 |
| 94 | G9 | O | FL G09 |
| 95 | G8 | O | FL G08 |
| 96 | G7 | O | FL G07 |
| 97 | G6 | O | FL G06 |
| 98 | G5 | O | FL G05 |
| 99 | G4 | O | FL G04 |
| 100 | G3 | O | FL G03 |

## LC72131M (IC401)

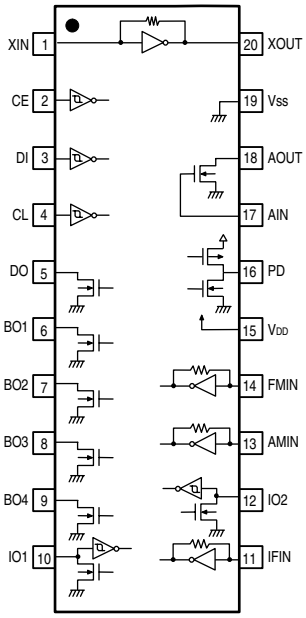


## LA1266 (IC402)

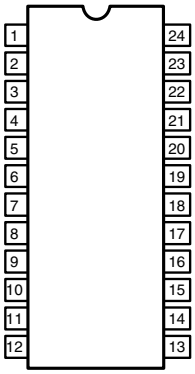

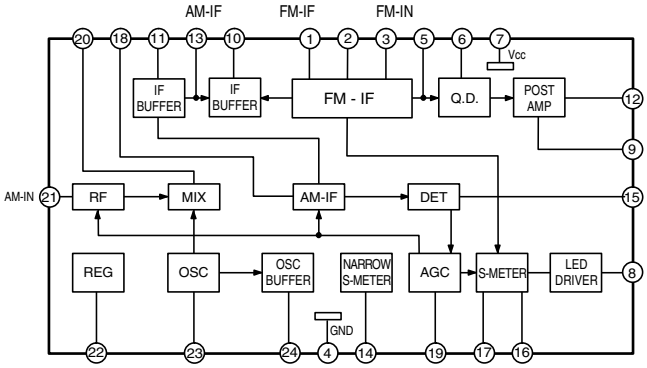


## LA3401 (IC403)

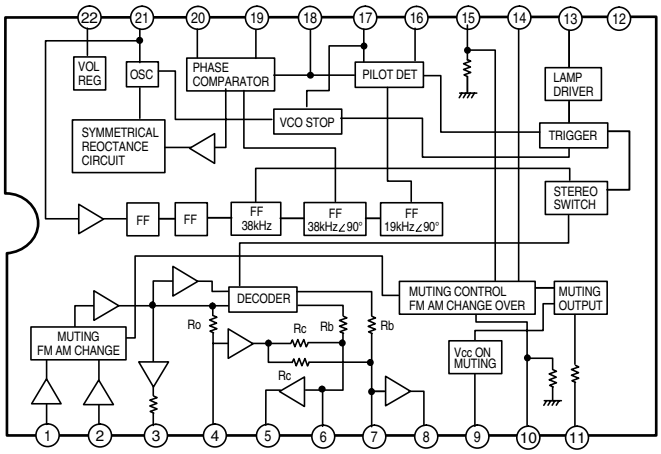


## TC9273N-007 (IC300)

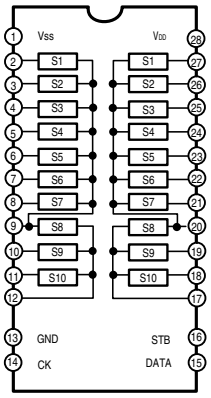


### ● TC9273N Terminal Function

| Pin No | Symbol | Name | Function | |
|---|---|---|---|---|
| 1 | Vss | +Power Terminal | Dual Power Use:VDD = 8.0~17 V Single Power Use:VDD = 8.0~18V | |
| 13 | GND | Digital Ground | GND=0V GND=0V | |
| 28 | VDD | +Power Terminal | Vss=-8.0~-17V | |
| 2~12<br>12~27 | S1~S10 | I/O Terminal | Input terminal of analog switch. | |
| 14 | CK | Clock Input | Clock input for data transfer. | Low level Border Input Terminal |
| 15 | DATA | Data Input | Serial input for switch setting. | |
| 16 | STB | Strobe Input | Strobe InputStrobe input for data writing. | |

## LA7952 (IC500)
## (U.S.A./Canada model)

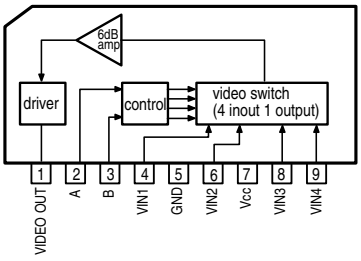


## NJM2068DD (IC301,602)

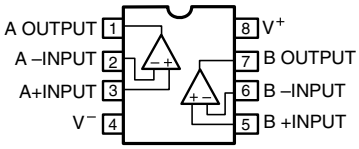

**TDA7330B (IC901)**
**(Europe model only)**

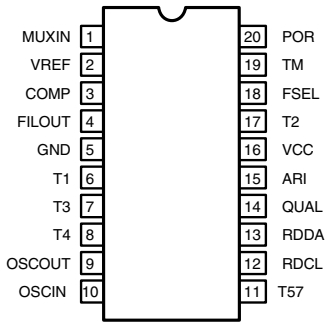


**NJM7805FA (IC104)**
**NJM7812FA (IC502)**
**(U.S.A./Canada model)**
**KIA7815AP (IC101)**

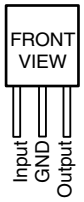


**NJM7915FA (IC102)**

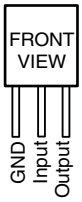


**PC74HC4094 (IC600)**

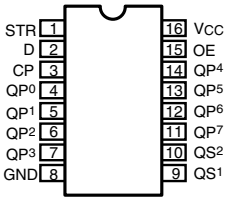


**M62446FP (IC601)**

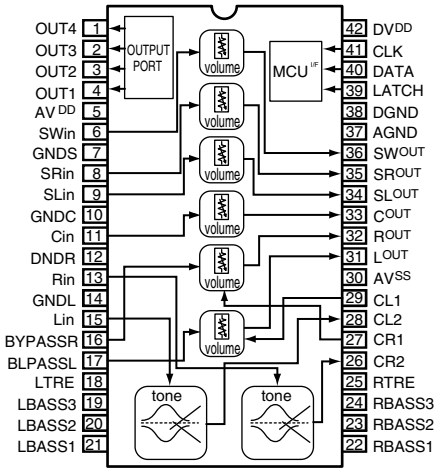


**CXA1511M(IC501)**
**(U.S.A./Canada model)**

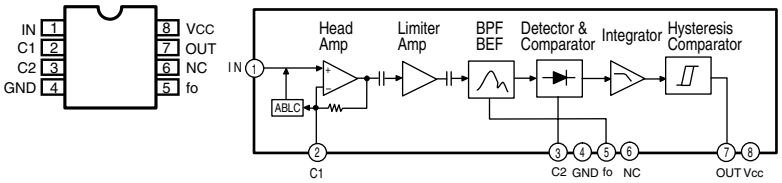


## ● IC PROTECTOR

**ICP-N15 (IC105)**

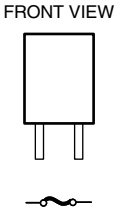


## ● POSISTOR

**P43T7D330BW16**

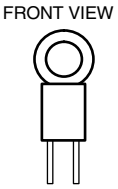


## ● IR SENSOR

**NJL64H380A (RMC900)**

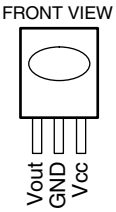


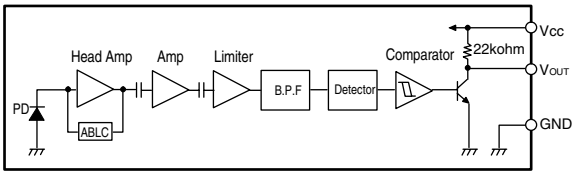

## ● TRANSISTORS

**DTA114EK**
**DTA114YK**
**DTC114YK**

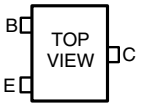


**DTA series**

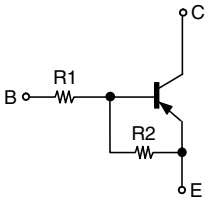


**DTC series**

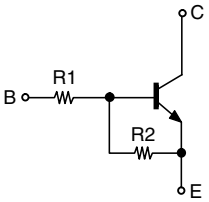


**DTA114ES**
**DTA144ES**
**DTC114ES**
**DTC114YS**
**DTC144ES**

| | R1 | R2 |
|---|---|---|
| DTA114EK | 10kohm | 10kohm |
| DTA114ES | 10kohm | 10kohm |
| DTA114YK | 10kohm | 47kohm |
| DTA114ES | 47kohm | 47kohm |

| | R1 | R2 |
|---|---|---|
| DTC114ES | 10kohm | 10kohm |
| DTC114YK | 10kohm | 47kohm |
| DTC114YS | 10kohm | 47kohm |
| DTC144ES | 47kohm | 47kohm |

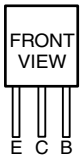


**KTC3880S**

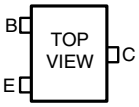


**2SD947F**
**KTA1266Y**
**KSA992F**
**KSC1845F**
**KTC3200BL**
**KTC3198Y**
**KTA1268BL**
**KSA916Y**
**2SC1740S**
**KTC2874B**

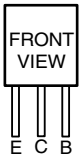


**2SB1559**
**2SD2389**

## ● DIODES (LED Included)

**MTZJ3.3B**
**MTZJ5.1B**
**MTZJ5.6B**
**MTZJ6.2B**
**MTZJ6.8B**
**MTZJ7.5A**
**MTZJ7.5B**
**MTZJ18B**
**MTZJ20B**

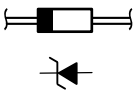

**1N4007**
**1SS133**

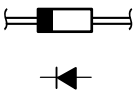

**KDS160**

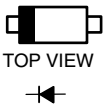


**HL-50RDRF4**

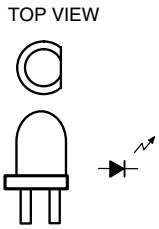


**KBPC604**

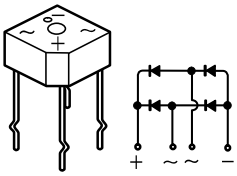

## ● FL DISPLAY

### 16-st-42GNK (FL900)

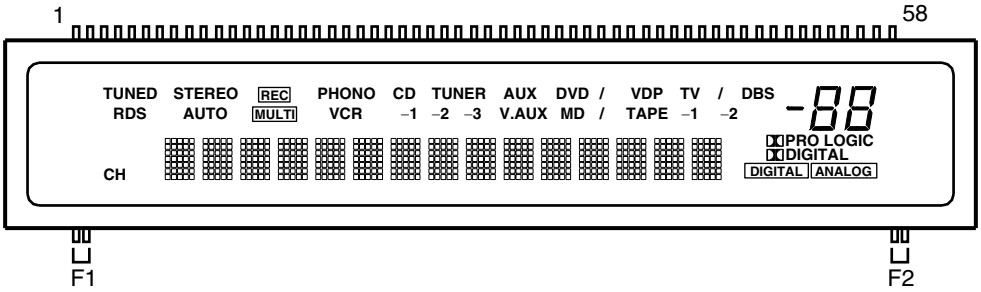


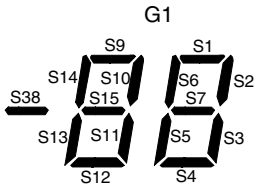


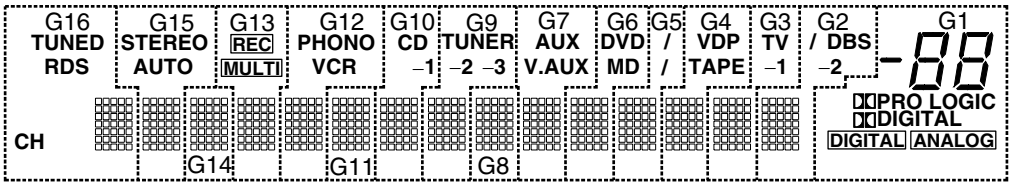


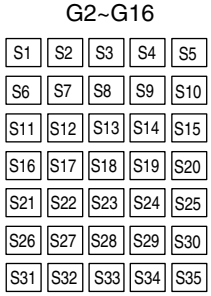


### Pin Assignment

| | | | | | | | | | | | | | | | | | | | | |
|---|---|---|---|---|---|---|---|---|---|---|---|---|---|---|---|---|---|---|---|---|
| PIN NO. | 1 | 2 | 3 | 4 | 5 | 6 | 7 | 8 | 9 | 10 | 11 | 12 | 13 | 14 | 15 | 16 | 17 | 18 | 19 | 20 |
| CONNECTION | F1 | F1 | S1 | S2 | S3 | S4 | S5 | S6 | S7 | S8 | S9 | S10 | S11 | S12 | S13 | S14 | S15 | S16 | S17 | S18 |
| PIN NO. | 21 | 22 | 23 | 24 | 25 | 26 | 27 | 28 | 29 | 30 | 31 | 32 | 33 | 34 | 35 | 36 | 37 | 38 | 39 | 40 |
| CONNECTION | S19 | S20 | S21 | S22 | S23 | S24 | S25 | S26 | S27 | S28 | S29 | S30 | S31 | S32 | S33 | S34 | S35 | S36 | S37 | S38 |
| PIN NO. | 41 | 42 | 43 | 44 | 45 | 46 | 47 | 48 | 49 | 50 | 51 | 52 | 53 | 54 | 55 | 56 | 57 | 58 | | |
| CONNECTION | G16 | G15 | G14 | G13 | G12 | G11 | G10 | G9 | G8 | G7 | G6 | G5 | G4 | G3 | G2 | G1 | F2 | F2 | | |

F1,F2 : Filament
G1~G16 : Grid
S1~S38 : Anode

### Anode & Grid Assignment

| | G1 | G2~G16 | | G1 | G2~G16 | | G1 | G2~G16 | | G1 | G2~G16 |
|---|---|---|---|---|---|---|---|---|---|---|---|
| S1 | S1 | S1 | S10 | S10 | S10 | S19 | —— | S19 | S28 | —— | S28 |
| S2 | S2 | S2 | S11 | S11 | S11 | S20 | —— | S20 | S29 | —— | S29 |
| S3 | S3 | S3 | S12 | S12 | S12 | S21 | —— | S21 | S30 | —— | S30 |
| S4 | S4 | S4 | S13 | S13 | S13 | S22 | —— | S22 | S31 | —— | S31 |
| S5 | S5 | S5 | S14 | S14 | S14 | S23 | —— | S23 | S32 | —— | S32 |
| S6 | S6 | S6 | S15 | S15 | S15 | S24 | —— | S24 | S33 | —— | S33 |
| S7 | S7 | S7 | S16 | —— | S16 | S25 | —— | S25 | S34 | —— | S34 |
| S8 | —— | S8 | S17 | DIGITAL | S17 | S26 | —— | S26 | S35 | —— | S35 |
| S9 | S9 | S9 | S18 | PRO LOGIC | S18 | S27 | —— | S27 | | | |

| | G1 | G2 | G3 | G4 | G5 | G6 | G7 | G8 | G9 | G10 | G11 | G12 | G13 | G14 | G15 | G16 |
|---|---|---|---|---|---|---|---|---|---|---|---|---|---|---|---|---|
| S36 | DIGITAL | / | TV | VDP | /(DVD) | DVD | AUX | —— | TUNER | CD | —— | PHONO | REC | —— | STEREO | TUNED |
| S37 | ANALOG | –2 | –1 | TAPE | /(MD) | MD | V.AUX | —— | –2 | –1 | —— | VCR | MULTI | —— | AUTO | RDS |
| S38 | S38 | DBS | —— | —— | —— | —— | —— | —— | –3 | —— | —— | —— | —— | —— | —— | CH |

## PRINTED WIRING BOARDS

### MAIN P.W.B. UNIT Ass'y

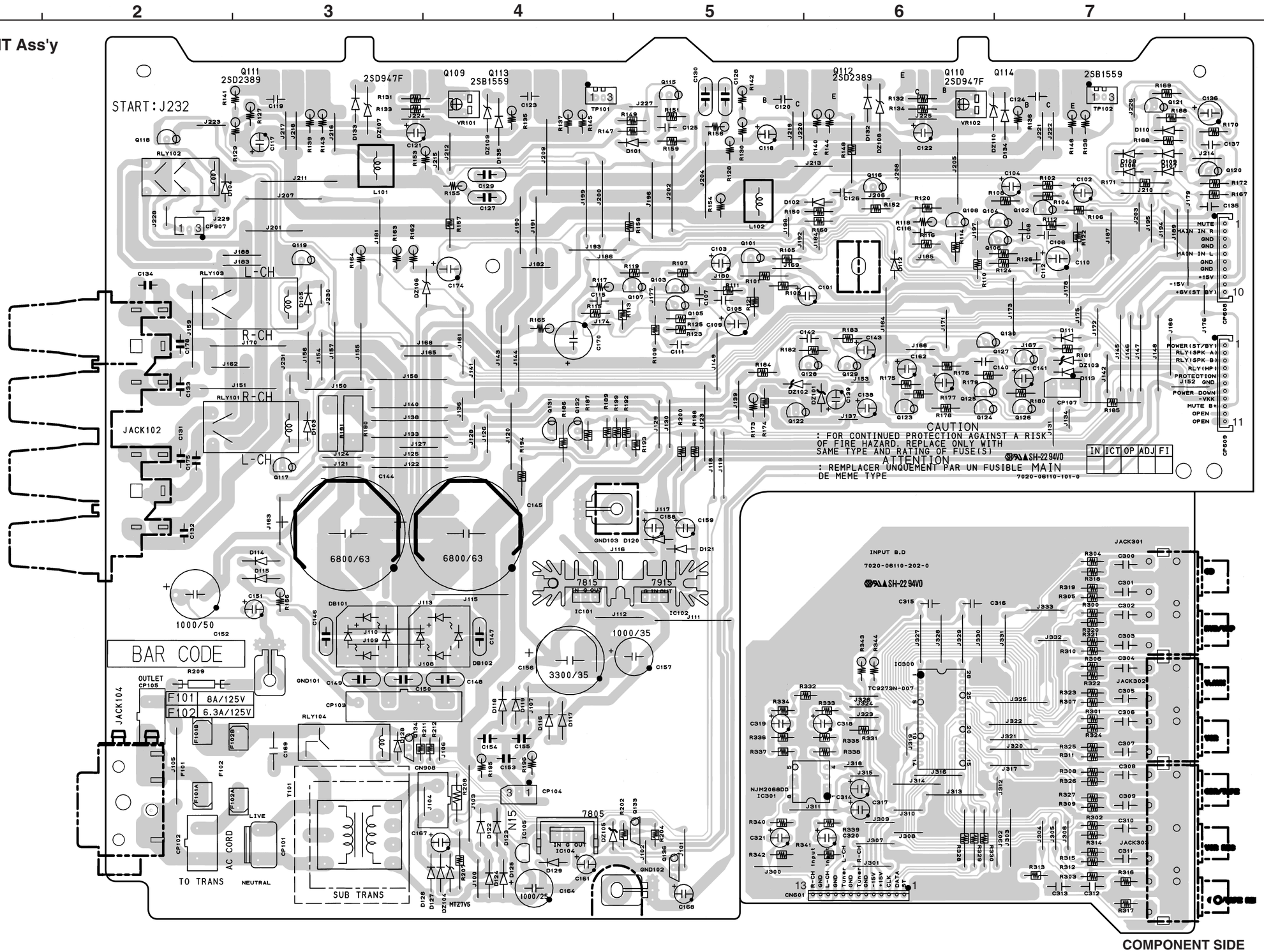


COMPONENT SIDE

## VOLUME P.W.B. UNIT Ass'y

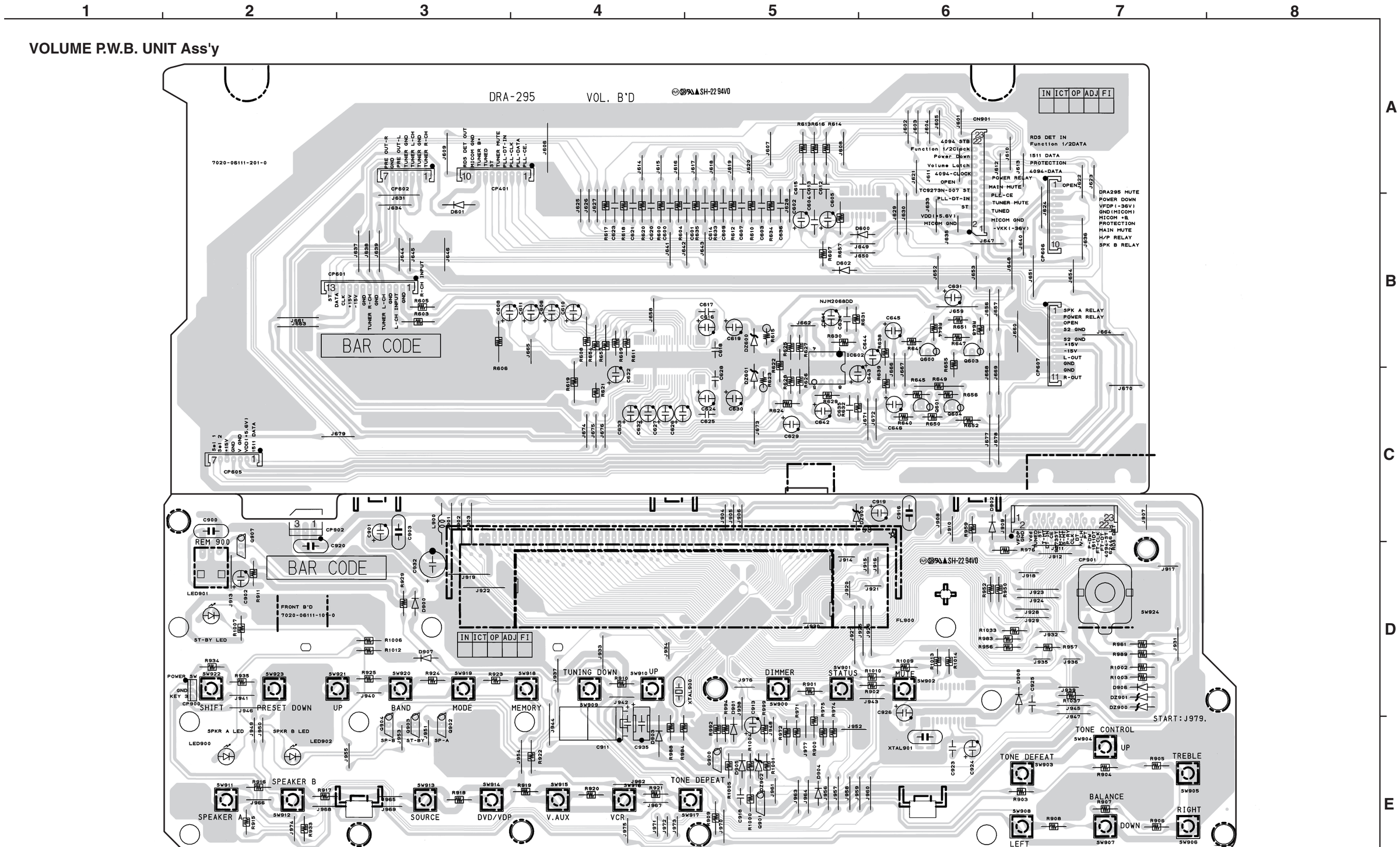


COMPONENT SIDE

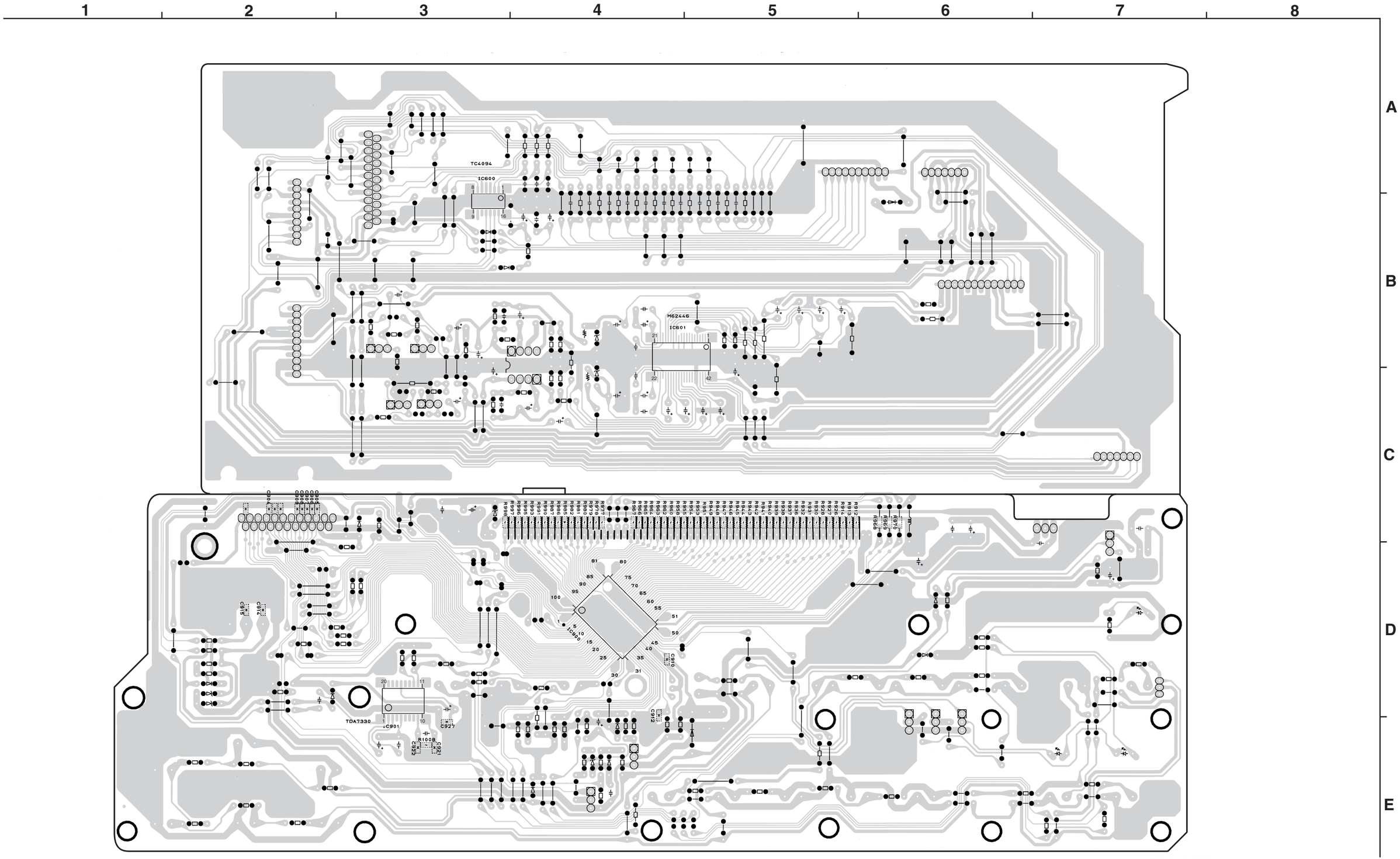
1
2
3
4
5
6
7
8
A
B
C
D
E
TC4094
IC600
M62446
IC601
IC900
TDA7330
IC901
C919
C921
C922
C923
C924
C927
C917
C918
R1008

FOIL SIDE

## TUNER P.W.B. UNIT Ass'y

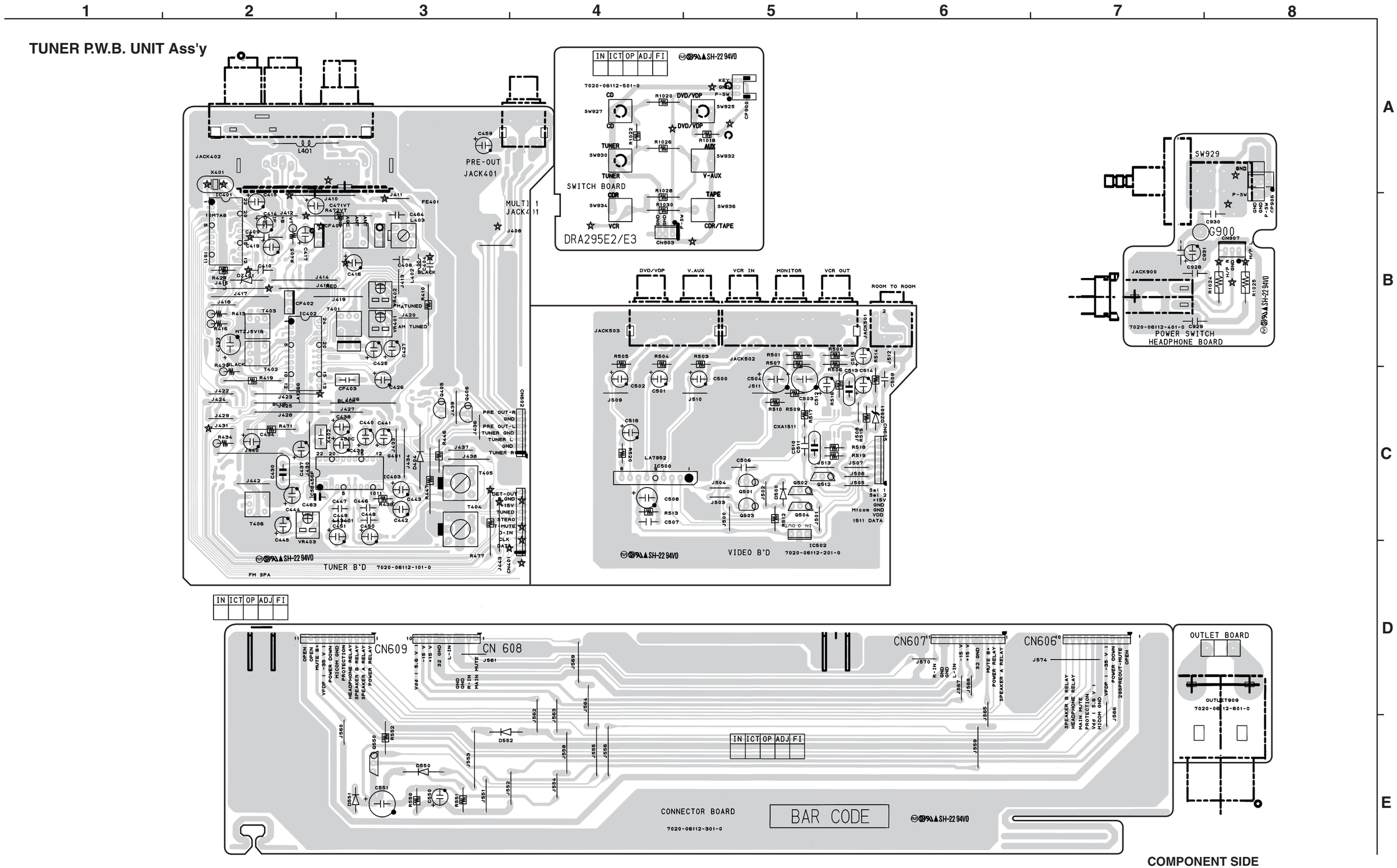

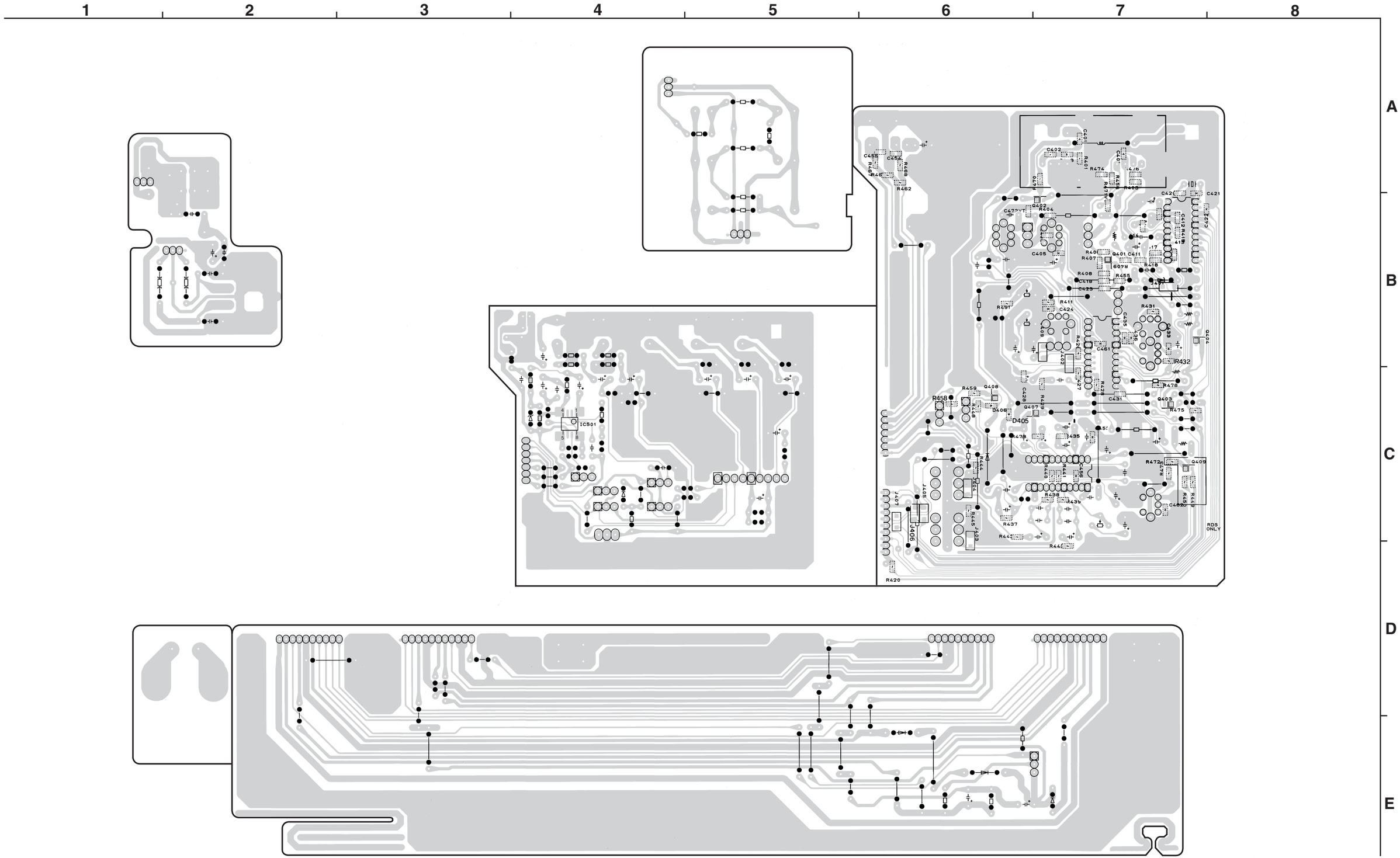
1
2
3
4
5
6
7
8
A
B
C
D
E
IC501
D405
Q409
RDS ONLY
FOIL SIDE

# NOTE FOR PARTS LIST

- Part indicated with the mark "⦿" are not always in stock and possibly to take a long period of time for supplying, or in some case supplying of part may be refused.
- When ordering of part, clearly indicate "1" and "I" (i) to avoid mis-supplying.
- Ordering part without stating its part number can not be supplied.
- Part indicated with the mark "★" is not illustrated in the exploded view.
- Not including Carbon Film ±5%, 1/4W Type in the P.W.Board parts list. (Refer to the Schematic Diagram for those parts.)

**WARNING:**

Parts marked with this symbol ⚠ ▭ have critical characteristics.
Use ONLY replacement parts recommended by the manufacturer.

## ● Resistors

**Ex.:** RN 14K 2E 182 G FR

Type | Shape and performance | Power | Resistance | Allowable error | Others

| | | | |
|---|---|---|---|
| RD : Carbon | 2B : 1/8W | F : ±1% | P : Pulse-resistant type |
| RC : Composition | 2E : 1/4W | G : ±2% | NL : Low noise type |
| RS : Metal oxide film | 2H : 1/2W | J : ±5% | NB : Non-burning type |
| RW : Winding | 3A : 1W | K : ±10% | FR : Fuse-resistor |
| RN : Metal film | 3D : 2W | M : ±20% | F : Lead wire forming |
| RK : Metal mixture | 3F : 3W | | |
| | 3H : 5W | | |

✻ **Resistance**

1 8 2 ⇒ 1800 ohm = 1.8 kohm
Indicates number of zeros after effective number.
2-digit effective number.
• Units: ohm

1 R 2 ⇒ 1.2 ohm
1-digit effective number.
2-digit effective number, decimal point indicated by R.
• Units: ohm

## ● Capacitors

**Ex.:** CE 04W 1H 2R2 M BP

Type | Shape and performance | Dielectric strength | Capacity | Allowable error | Others

| | | | |
|---|---|---|---|
| CE : Aluminum foil electrolytic | 0J : 6.3V | F : ±1% | HS : High stability type |
| CA : Aluminum solid electrolytic | 1A : 10V | G : ±2% | BP : Non-polar type |
| CS : Tantalum electrolytic | 1C : 16V | J : ±5% | HR : Ripple-resistant type |
| CQ : Film | 1E : 25V | K : ±10% | DL : For change and discharge |
| CK : Ceramic | 1V : 35V | M : ±20% | HF : For assuring high requency |
| CC : Ceramic | 1H : 50V | Z : +80% −20% | U : UL part |
| CP : Oil | 2A : 100V | P : +100% −0% | C : CSA part |
| CM : Mica | 2B : 125V | C : ±0.25pF | W : UL-CSA type |
| CF : Metallized | 2C : 160V | D : ±0.5pF | F : Lead wire forming |
| CH : Metallized | 2D : 200V | = : Others | |
| | 2E : 250V | | |
| | 2H : 500V | | |
| | 2J : 630V | | |

✻ **Capacity (electrolyte only)**

2 2 2 ⇒ 2200μF
Indicates number of zeros after effective number.
2-digit effective number.
• Units: μF.

2 R 2 ⇒ 2.2μF
1-digit effective number.
2-digit effective number, decimal point indicated by R.
• Units: μF.

✻ **Capacity (except electrolyte)**

2 2 2 ⇒ 2200pF=0.0022μF
(More than 2) Indicates number of zeros after effective number.
2-digit effective number.
• Units: pF.

2 2 1 ⇒ 220pF
(0 or 1) Indicates number of zeros after effective number.
2-digit effective number.
• Units: pF.

• When the dielectric strength is indicated in AC, "AC" is included after the dieelectric strength value.

# PARTS LIST OF P.W.B. UNIT

## MAIN P.W.B. UNIT ASS'Y

**Note:** The symbols in the column "Remarks" indicate the following destinations.
E3: U.S.A./Canada model E2: Europe model

| Ref. No. | Part No. | Part Name | Remarks |
|---|---|---|---|
| **SEMICONDUCTORS GROUP** | | | |
| IC101 | 963 0057 903 | IC KIA7815AP | J126781500060 |
| IC102 | 963 0044 806 | IC NJM7915FA | J126791500010 |
| IC104 | 960 0196 001 | IC NJM7805FA | J126780500130 |
| IC105 | 960 0195 808 | IC ICP-N15 | J120001500030 |
| IC300 | 960 0174 308 | IC TC9273N-007 | J080927300000 |
| IC301 | 960 0179 701 | IC NJM2068DD | J121206800000 |
| Q101,102 | 960 0196 603 | Transistor KTC2874B | J502287400010 |
| Q103-106 | 960 0196 205 | Transistor KSA992Y | J5000992F0050 |
| Q107,108 | 960 0196 506 | Transistor KSC1845F | J5021845F0000 |
| Q115,116 | 960 0196 506 | Transistor KSC1845F | J5021845F0000 |
| Q117-119 | 963 0022 006 | Transistor DTC114YS | J6020114Y0050 |
| Q120 | 960 0196 302 | Transistor KTA1268BL | J5001268B0050 |
| Q121 | 960 0196 700 | Transistor KTC3200BL | J5023200B0050 |
| Q122 | 960 0189 005 | Transistor KSA916Y | J5000916Y0050 |
| Q123 | 960 0005 105 | Transistor KTA1266Y | J5001266Y0050 |
| Q124 | 960 0005 202 | Transistor KTC3198Y | J5023198Y0000 |
| Q125 | 960 0196 302 | Transistor KTA1268BL | J5001268B0050 |
| Q126,127 | 960 0005 202 | Transistor KTC3198Y | J5023198Y0000 |
| Q128 | 960 0196 302 | Transistor KTA1268BL | J5001268B0050 |
| Q129,130 | 960 0005 202 | Transistor KTC3198Y | J5023198Y0000 |
| Q131,132 | 960 0196 302 | Transistor KTA1268BL | J5001268B0050 |
| Q133,134 | 960 0196 409 | Transistor 2SC1740SR | J5021740S0010 |
| Q136 | 963 0022 006 | Transistor DTC114YS | J6020114Y0050 |
| D101-113 | 963 0020 309 | Diode 1SS133 | K000013300520 |
| D114-119 | 963 0058 407 | Diode 1N4007 | K000400700520 |
| D120,121 | 963 0020 309 | Diode 1SS133 | K000013300520 |
| D122-125 | 963 0058 407 | Diode 1N4007 | K000400700520 |
| D126-129 | 963 0020 309 | Diode 1SS133 | K000013300520 |
| D132-135 | 963 0020 309 | Diode 1SS133 | K000013300520 |
| DB101,102 | 960 0197 107 | Diode KBPC604 | K047604000020 |
| DZ101,102 | 963 0046 202 | Zener diode MTZJ18B | K06018R044520 |
| DZ103,104 | 963 0047 405 | Zener diode MTZJ7.5B | K06007R544520 |
| DZ105 | 963 0058 708 | Zener diode MTZJ20B | K06020R044520 |
| DZ106 | 960 0095 500 | Zener diode MTZJ5.1B | K06005R144520 |
| DZ107-110 | 963 0047 502 | Zener diode MTZJ3.3B | K06003R344520 |
| **RESISTORS GROUP** | | | |
| R117,118 | 960 9004 301 | Metal film 47ohm 1/4W (NB) | C060047063050 |
| R127-130 | 244 2052 957 | Metal film 5.6kohm 1W (NB) | C060056265070 |
| R135,136 | 963 9003 068 | Metal film 4.7ohm 1/4W (NB) | C0604R7063050 |
| R137-140 | 244 2043 982 | Metal film 0.22ohm 1W (NB) | C060R22065070 |
| R141,142 | 963 9003 068 | Metal film 4.7ohm 1/4W (NB) | C0604R7063050 |
| R143-146 | 244 2043 982 | Metal film 0.22ohm 1W (NB) | C060R22065070 |
| R153-156 | 244 2043 937 | Metal oxide 10ohm 1W (NB) | C041010065060 |
| R162-164 | 244 2055 996 | Metal film 1.2kohm 1W (NB) | C060012265050 |
| R165 | 244 2043 937 | Metal oxide 10ohm 1W (NB) | C041010065060 |
| R166 | 244 2043 982 | Metal film 0.22ohm 1W (NB) | C060R22065050 |
| R173 | 963 9003 068 | Metal film 4.7ohm 1/4W (NB) | C0604R7063050 |
| R190,191 | 963 0045 203 | Winding 0.1ohm 5W | C144R10069110 |
| R195,196 | 244 2043 982 | Metal film 0.22ohm 1W (NB) | C060R22065050 |
| R208 | 963 9005 105 | Carbon film 68ohm 1/4W | C000068063520 |
| R209 | 963 0043 108 | Metal film 2.2Mohm 1/2W | for E3 C060022574000 |
| R343,344 | 244 2043 937 | Metal oxide 10ohm 1W (NB) | C041010065060 |
| VR101,102 | 960 0091 601 | Semi fixed resistor 1kohm | C544102015130 |
| **CAPACITORS GROUP** | | | |
| C101,102 | | Electrolytic 22uF/50V | D040220087060 |
| C103,104 | | Electrolytic 10uF/50V | D040100087070 |
| C105,106 | 963 9005 118 | Ceramic 100pF/50V | D004101067060 |
| C107,108 | 963 9003 165 | Ceramic 220pF/500V | D009092212500 |
| C109,110 | | Electrolytic 47uF/25V | D040470084070 |
| C111,112 | 963 9005 121 | Ceramic 33pF/500V | D000330067050 |
| C115,116 | 963 9005 134 | Ceramic 1200pF/50V | D004122287050 |
| C117,118 | | Electrolytic 47uF/50V | D040470087060 |
| C119,120 | 963 9003 084 | Ceramic 100pF/500V | D00410106D050 |
| C121,122 | | Electrolytic 10uF/50V | D040100087070 |
| C123,124 | 963 9003 084 | Ceramic 100pF/500V | D00410106D050 |
| C125,126 | 963 9004 517 | Ceramic 0.022uF/50V | D004223597050 |
| C127-130 | 963 9003 097 | Mylar film 0.1uF/250V | D02010407H080 |
| C131-134 | 960 9003 409 | Mylar film 0.01uF/50V | for E2 D020103167050 |
| C135 | 963 9004 504 | Ceramic 0.01uF/50V | D004103097060 |
| C136 | | Electrolytic 2.2uF/50V | D0402R2087100 |
| C137 | 963 9004 504 | Ceramic 0.01uF/50V | D004103097060 |
| C138,139 | | Electrolytic 1uF/50V | D040010087080 |
| C140 | 963 9005 147 | Ceramic 0.1uF/25V | D004104594050 |
| C141 | | Electrolytic 220uF/6.3V | D040221081230 |
| C142 | 963 9005 147 | Ceramic 0.1uF/25V | D004104594050 |
| C143 | | Electrolytic 220uF/6.3V | D040221081230 |
| C144,145 | 963 9005 150 | Electrolytic 6800uF/63V | D040681088030 |
| C146-150 | 963 9003 097 | Mylar film 0.1uF/250V | D02010407H080 |
| C151 | | Electrolytic 1uF/50V | D040010087080 |
| C152 | 963 9005 163 | Electrolytic 1000uF/50V | D040102087230 |
| C153-155 | 963 0021 900 | Mylar film 0.047uF/100V | D02047306C060 |
| C156 | 960 9007 201 | Electrolytic 3300uF/35V | D040332085010 |
| C157 | 963 9003 123 | Electrolytic 1000uF/35V | D040102085040 |
| C158,159 | | Electrolytic 10uF/50V | D040100087070 |
| C161 | | Electrolytic 10uF/50V | D040100087070 |
| C162 | | Electrolytic 4.7uF/50V | D0404R7087100 |
| C164 | 963 9003 136 | Electrolytic 1000uF/25V | D040102084060 |
| C167,168 | | Electrolytic 1uF/50V | D040010087080 |
| ⚠ C169 | 963 9005 176 | Ceramic 4700pF/250V (AC) | D008472089010 |
| C170 | 963 9005 299 | Electrolytic 100uF/100V | D04010108C200 |
| C174 | | Electrolytic 10uF/50V | D040100087070 |

| Ref. No. | Part No. | Part Name | Remarks |
|---|---|---|---|
| C175 | 963 9005 189 | Mylar film 2200pF/63V | for E2<br>D020222068050 |
| C178 | 963 9005 189 | Mylar film 2200pF/63V | for E2<br>D020222068050 |
| C300-313 | 963 9004 520 | Ceramic 100pF/50V | for E2<br>D005101177520 |
| C314 | | Electrolytic 10uF/50V | D040100087070 |
| C315,316 | 963 9004 504 | Ceramic 0.01uF/50V | D004103097060 |
| C317-321 | | Electrolytic 10uF/50V | D040100087070 |

| OTHER PARTS GROUP | | | | Q'ty |
|---|---|---|---|---|
| CN601 | 960 0129 706 | 13P connector base | L101352371310 | 1 |
| CN908 | 960 0123 304 | 2P connector base | for E2<br>L104353280200 | 1 |
| CP101 | 960 0197 505 | 2P connector base | L108202000220 | 1 |
| CP102 | 960 0123 304 | 2P connector base | L104353280200 | 1 |
| CP103 | 963 0081 403 | 4P connector base | L104353280400 | 1 |
| CP104 | 960 0123 207 | 3P connector base | L102526700300 | 1 |
| CP105 | 960 0123 304 | 2P connector base | for E2<br>L104353280200 | 1 |
| CP107 | 960 0123 207 | 3P connector base | L102526700300 | 1 |
| CP608 | 963 0088 008 | 10P connector base | L101100041010 | 1 |
| CP609 | 963 0087 805 | 11P connector base | L101100041110 | 1 |
| CP907 | 963 0048 909 | 3P connector base | L101220030000 | 1 |
| ⚠ F101 | 960 0188 705 | Fuse 8A/125V | for E3<br>G650802121060 | 1 |
| ⚠ F101 | 960 0142 602 | Fuse T2.5A/250V | for E2<br>G650252251160 | 1 |
| ⚠ F102 | 963 0089 803 | Fuse 6.3A/125V | for E3<br>G650632121150 | 1 |
| ⚠ F102 | 963 0044 709 | Fuse T3.15A/250V | for E2<br>G650312251160 | 1 |
| F101A,B | 960 0005 804 | Fuse clip | G645000050010 | 2 |
| F102A,B | 960 0005 804 | Fuse clip | G645000050010 | 2 |
| GND101-103 | 960 9006 600 | GND terminal | 3790040876010 | 3 |
| JACK102 | 963 0074 009 | 8P speaker terminal | G61408103610A | 1 |
| JACK104 | 960 0181 508 | 2P AC outlet | for E3<br>G435204004010 | 1 |
| JACK301,302 | 960 0188 200 | 4P pin jack | G602040610000 | 2 |
| JACK303 | 960 0188 307 | 6P pin jack | G603060610010 | 1 |
| L101,102 | 963 0049 005 | Inductor 0.5uH | D330R50000000 | 2 |
| RLY101 | 960 0181 702 | Relay (G5PA-28) | G680240502020 | 1 |
| RLY102 | 963 0071 303 | Relay (RSB24S) | G680240202010 | 1 |
| RLY103 | 960 0181 702 | Relay (G5PA-28) | G680240502020 | 1 |
| RLY104 | 960 0181 605 | Relay (G5PA-1-8) | G680120502010 | 1 |

| Ref. No. | Part No. | Part Name | Remarks | Q'ty |
|---|---|---|---|---|
| ⚠ T101 | 960 0185 708 | Power trans. (Sub) | for E3<br>8200280960010 | 1 |
| ⚠ T101 | 960 0185 711 | Power trans. (Sub) | for E2<br>8201280000010 | 1 |
| TP101,102 | 960 0161 405 | 3P connector base | L101530140310 | 2 |
| ★ | — | Heat sink | 2120043538050 | 1 |
| ★ | 963 0018 007 | Screw 3×8 (B)-Z | B020030081B10 | 2 |
| ★ | 963 0068 400 | Condenser cover | for E2<br>4310002640010 | 1 |
| ★ | 963 0060 000 | Fuse label (for T101) | for E2<br>5527200040020 | 1 |

## FRONT P.W.B. UNIT ASS'Y

| Ref. No. | Part No. | Part Name | Remarks |
|---|---|---|---|
| **SEMICONDUCTORS GROUP** | | | |
| IC600 | 960 0195 400 | IC PC74HC4094D | J040744094020 |
| IC601 | 960 0179 604 | IC M62446FP | J084624460010 |
| IC602 | 960 0179 701 | IC NJM2068DD | J121206800000 |
| IC900 | 963 0089 609 | IC CXP82840-321Q | J020828403210 |
| IC901 | 963 0081 801 | IC TDA7330BD | for E2 J020733000010 |
| Q600,601 | 960 0196 603 | Transistor KTC2874B | for E3 J502287400010 |
| Q603,604 | 960 0196 603 | Transistor KTC2874B | for E3 J502287400010 |
| Q900 | 960 0196 409 | Transistor 2SC1740SR | J5021740S0010 |
| Q901 | 963 0075 503 | Transistor DTC144ES | J6020144E0010 |
| Q902-904 | 963 0081 306 | Transistor DTC114ES | J6020114E0010 |
| Q907 | 963 0081 209 | Transistor DTA144ES | J6000144E0010 |
| D600 | 963 0020 309 | Diode 1SS133 | K000013300520 |
| D601 | 963 0058 407 | Diode 1N4007 | K000400700520 |
| D602 | 963 0020 309 | Diode 1SS133 | K000013300520 |
| D900-902 | 963 0020 309 | Diode 1SS133 | K000013300520 |
| D903 | 963 0058 407 | Diode 1N4007 | K000400700520 |
| D904-908 | 963 0020 309 | Diode 1SS133 | K000013300520 |
| DZ600,601 | 960 0222 603 | Zener diode MTZJ7.5A | K06007R544530 |
| DZ900,901 | 960 0095 607 | Zener diode MTZJ5.6B | K06005R644520 |
| DZ902 | 963 0047 502 | Zener diode MTZJ3.3B | K06003R344520 |
| DZ903 | 960 0095 801 | Zener diode MTZJ6.8B | K06006R844520 |
| LED900-902 | 960 0197 204 | LED HL50RDRF4T | K500052015010 |
| FL900 | 960 0180 509 | FLT (16-ST-42GNK) | K530164200010 |
| **RESISTORS GROUP** | | | |
| R615 | 244 2052 960 | Metal film 220ohm 1W (NB) | C060022165050 |
| R623 | 244 2052 960 | Metal film 220ohm 1W (NB) | C060022165050 |
| R912-914 | 963 9004 397 | Carbon chip 56kohm 1/16W | C20005636M160 |
| R926-928 | 963 9004 397 | Carbon chip 56kohm 1/16W | C20005636M160 |
| R930-932 | 963 9004 397 | Carbon chip 56kohm 1/16W | C20005636M160 |
| R936-949 | 963 9004 397 | Carbon chip 56kohm 1/16W | C20005636M160 |
| R951 | 963 9004 397 | Carbon chip 56kohm 1/16W | C20005636M160 |
| R953-955 | 963 9004 397 | Carbon chip 56kohm 1/16W | C20005636M160 |
| R958 | 963 9004 397 | Carbon chip 56kohm 1/16W | C20005636M160 |
| R960 | 963 9004 397 | Carbon chip 56kohm 1/16W | C20005636M160 |
| R962-970 | 963 9004 397 | Carbon chip 56kohm 1/16W | C20005636M160 |
| R977-982 | 963 9004 397 | Carbon chip 56kohm 1/16W | C20005636M160 |
| R985-987 | 963 9004 397 | Carbon chip 56kohm 1/16W | C20005636M160 |
| R990,991 | 963 9004 397 | Carbon chip 56kohm 1/16W | C20005636M160 |
| R993 | 963 9004 397 | Carbon chip 56kohm 1/16W | C20005636M160 |
| R995 | 963 9004 397 | Carbon chip 56kohm 1/16W | C20005636M160 |
| R1008 | 963 9004 245 | Carbon chip 2.2Mohm 1/16W | for E2 C20002256M160 |
| **CAPACITORS GROUP** | | | |
| C600,601 | 963 9004 520 | Ceramic 100pF/50V | D005101177520 |
| C602 | | Electrolytic 10uF/50V | D040100087070 |
| C603 | 963 9004 520 | Ceramic 100pF/50V | D005101177520 |
| C604 | 960 9003 108 | Ceramic 0.022uF/25V | D005223594520 |
| C605 | | Electrolytic 47uF/10V | D040470082050 |
| C606 | | Electrolytic 4.7uF/50V | D0404R7087100 |
| C607 | 963 9004 520 | Ceramic 100pF/50V | D005101177520 |
| C608 | | Electrolytic 4.7uF/50V | D0404R7087100 |
| C609 | 963 9004 520 | Ceramic 100pF/50V | D005101177520 |
| C610,611 | | Electrolytic 4.7uF/50V | D0404R7087100 |
| C612-615 | 963 9004 520 | Ceramic 100pF/50V | D005101177520 |
| C616 | | Electrolytic 0.33uF/50V | D040R33087100 |
| C617 | 960 9003 603 | Mylar film 0.015uF/50V | D020153167050 |
| C618 | 963 9005 079 | Mylar film 8200pF/100V | D02082206C060 |
| C619 | | Electrolytic 47uF/10V | D040470082050 |
| C620,621 | 963 9004 520 | Ceramic 100pF/50V | D005101177520 |
| C622 | | Electrolytic 1uF/50V | D040010087080 |
| C623 | 963 9004 520 | Ceramic 100pF/50V | D005101177520 |
| C624 | | Electrolytic 0.33uF/50V | D040R33087100 |
| C625 | 960 9003 603 | Mylar film 0.015uF/50V | D020153167050 |
| C626,627 | | Electrolytic 3.3uF/50V | D0403R308705C |
| C628 | 963 9005 079 | Mylar film 8200pF/100V | D02082206C060 |
| C629 | | Electrolytic 10uF/50V | for E3 D040100087070 |
| C630 | | Electrolytic 47uF/10V | D040470082050 |
| C631 | | Electrolytic 10uF/50V | for E3 D040100087070 |
| C632,633 | | Electrolytic 10uF/50V | D040100087070 |
| C634,635 | 963 9005 082 | Ceramic 39pF/50V | D001390067520 |
| C636 | 960 9003 108 | Ceramic 0.022uF/25V | for E3 D005223594520 |
| C636 | 963 9004 520 | Ceramic 100pF/50V | for E2 D005101177520 |
| C641-644 | | Electrolytic 10uF/50V | D040100087070 |
| C645,646 | | Electrolytic 10uF/50V | for E3 D040100087070 |
| C900 | 963 0021 900 | Mylar film 0.047uF/100V | D02047306C060 |
| C901 | | Electrolytic 1uF/50V | D040010087080 |
| C902 | | Electrolytic 47uF/25V | D040470084070 |
| C903 | 963 0021 900 | Mylar film 0.047uF/100V | D02047306C060 |
| C904-909 | 963 9004 575 | Ceramic chip 100pF/50V | D010101167160 |
| C910 | 963 9004 708 | Ceramic chip 0.1uF/50V | D011104577160 |
| C911 | 963 0061 504 | Back up cap. 8200uF/5.5V | D040822080010 |

| Ref. No. | Part No. | Part Name | Remarks |
|---|---|---|---|
| C912 | 963 9004 708 | Ceramic chip 0.1uF/50V | D011104577160 |
| C913 | | Electrolytic 4.7uF/50V | D0404R7087100 |
| C914,915 | 963 9004 698 | Ceramic chip 0.01uF/50V | D011103777160 |
| C916 | 963 0021 900 | Mylar film 0.047uF/100V | D02047306C060 |
| C918 | 963 9004 504 | Ceramic 0.01uF/50V | D004103097060 |
| C919 | | Electrolytic 47uF/50V | D040470087060 |
| C920 | 963 0021 900 | Mylar film 0.047uF/100V | D02047306C060 |
| C921,922 | 963 9004 614 | Ceramic chip 27pF/50V | for E2<br>D01027016716C |
| C923 | 963 9004 504 | Ceramic 0.01uF/50V | for E2<br>D004103097060 |
| C924 | | Electrolytic 10uF/50V | for E2<br>D040100087050 |
| C925 | 963 9005 095 | Ceramic 270pF/50V | for E2<br>D000271067050 |
| C926 | | Electrolytic 47uF/25V | for E2<br>D040470084070 |
| C927 | 963 9004 698 | Ceramic chip 0.01uF/50V | for E2<br>D011103777160 |
| C932 | | Electrolytic 100uF/50V | D040101087060 |
| C935 | 960 0186 503 | Electric double layer 0.047F/5.5V | for E2<br>D090473904010 |

| OTHER PARTS GROUP | | | | Q'ty |
|---|---|---|---|---|
| CN901 | 963 0071 206 | 23P FFC connector base | L131520452345 | 1 |
| CP401 | 963 0088 008 | 10P connector base | L101100041010 | 1 |
| CP601 | 960 0128 600 | 13P connector base | L101353361310 | 1 |
| CP602 | 963 0085 807 | 7P connector base | L101100040710 | 1 |
| CP605 | 963 0085 807 | 7P connector base | L101100040710 | 1 |
| CP606 | 963 0088 008 | 10P connector base | L101100041010 | 1 |
| CP607 | 963 0087 805 | 11P connector base | L101100041110 | 1 |
| CP900 | 963 0089 706 | 3P connector cord (L=100) | L000101030070 | 1 |
| CP901 | 963 0071 109 | 23P FFC connector base (L) | L131520442345 | 1 |
| CP902 | 963 0049 102 | 3P connector base (L) | L102526803010 | 1 |
| L900 | 960 0128 008 | Inductor 100uH | D330101001020 | 1 |
| REM900 | 960 0181 100 | Remocon sensor NJL64H380A | E940643800000 | 1 |
| SW900-923 | 960 0194 207 | Tact switch | G180000270010 | 24 |
| SW924 | 960 0181 207 | Rotary encoder (EC16B2420431) | G121162420400 | 1 |
| XTAL900 | 960 0112 001 | Ceramic resonator | CST10.0MGW-TF01<br>E830100000050 | 1 |
| XTAL901 | 960 0091 818 | Crystal 4.332MHz | for E2<br>E8004R3320051 | 1 |
| ★ | 960 0184 408 | FLT holder | 4320200026000 | 1 |

## TUNER P.W.B. UNIT ASS'Y

| Ref. No. | Part No. | Part Name | Remarks |
|---|---|---|---|
| **SEMICONDUCTORS GROUP** | | | |
| IC401 | 963 0043 700 | IC LC72131 | J120721310030 |
| IC402 | 963 0043 904 | IC LA1266 | J124126600010 |
| IC403 | 963 0044 000 | IC LA3401 | J124340100010 |
| IC500 | 960 0181 101 | IC LA7952 | for E3<br>J171795200000 |
| IC501 | 960 0174 104 | IC CXA1511M | for E3<br>J030151100010 |
| IC502 | 263 0516 001 | IC NJM7812FA | for E3<br>J126781200010 |
| Q401 | 963 0058 300 | Transistor KTC3880S | J5223880O0210 |
| Q402 | 963 0079 305 | Transistor DTA114YK | J5200114Y0210 |
| Q403,404 | 963 0058 203 | Transistor DTA114EK | J5200114E0210 |
| Q405,406 | 960 0196 603 | Transistor KTC2874B | J502287400010 |
| Q407 | 963 0024 208 | Transistor DTC114YK | J5220114Y0210 |
| Q408 | 963 0058 203 | Transistor DTA114EK | J5200114E0210 |
| Q409 | 963 0058 300 | Transistor KTC3880S | for E2<br>J5223880O0210 |
| Q501 | 960 0096 813 | Transistor KTC3199Y | for E3<br>J5023199Y0010 |
| Q502 | 963 0022 006 | Transistor DTC114YS | for E3<br>J6020114Y0050 |
| Q503 | 960 0096 813 | Transistor KTC3199Y | for E3<br>J5023199Y0010 |
| Q504 | 963 0022 006 | Transistor DTC114YS | for E3<br>J6020114Y0050 |
| Q512 | 963 0081 209 | Transistor DTA144ES | for E3<br>J6000144E0010 |
| Q550 | 963 0075 309 | Transistor DTA114ES | J6000114E0010 |
| D403 | 960 0197 000 | Diode KDS160 | K005016000010 |
| D404 | 963 0020 309 | Diode 1SS133 | K000013300520 |
| D405,406 | 960 0197 000 | Diode KDS160 | K005016000010 |
| D500 | 963 0020 309 | Diode 1SS133 | for E3<br>K000013300520 |
| D550 | 963 0058 407 | Diode 1N4007 | K000400700520 |
| D551 | 963 0020 309 | Diode 1SS133 | K000013300520 |
| D552 | 963 0058 407 | Diode 1N4007 | K000400700520 |
| DZ401 | 960 0095 500 | Zener diode MTZJ5.1B | K06005R144520 |
| DZ501 | 960 0095 704 | Zener diode MTZJ6.2B | for E3<br>K06006R244520 |
| **RESISTORS GROUP** | | | |
| R401 | 963 9004 821 | Carbon chip 10ohm 1/16W | C20001006M160 |
| R403 | 963 9004 339 | Carbon chip 470ohm 1/16W | C20004716M160 |
| R404 | 963 9004 083 | Carbon chip 100kohm 1/16W | C20001046M160 |

| Ref. No. | Part No. | Part Name | Remarks |
|---|---|---|---|
| R405 | 960 9003 807 | Metal film 100ohm 1/4W (NB) | C060010163050 |
| R406 | 963 9004 342 | Carbon chip 4.7kohm 1/16W | C20004726M160 |
| R407 | 963 9004 339 | Carbon chip 470ohm 1/16W | for E3 |
| | | | C20004716M160 |
| R407 | 963 9005 008 | Carbon chip 620ohm 1/16W | for E2 |
| | | | C20006216M160 |
| R408 | 963 9004 119 | Carbon chip 1.2kohm 1/16W | for E3 |
| | | | C20001226M160 |
| R408 | 963 9004 436 | Carbon chip 680ohm 1/16W | for E2 |
| | | | C20006816M160 |
| R409 | 963 9004 339 | Carbon chip 470ohm 1/16W | C20004716M160 |
| R411 | 963 9005 011 | Carbon chip 68kohm 1/16W | C20006836M160 |
| R412 | 963 9004 834 | Carbon chip 5.6kohm 1/16W | C20005626M160 |
| R413 | 960 9006 503 | Metal film 220ohm 1/4W (NB) | C060022163050 |
| R414 | 963 9004 216 | Carbon chip 2.2kohm 1/16W | C20002226M160 |
| R415 | 963 9003 398 | Carbon chip 1kohm 1/16W | C20001026M160 |
| R416 | 963 9005 024 | Metal film 680ohm 1/4W (NB) | C060068163050 |
| R417 | 963 9003 398 | Carbon chip 1kohm 1/16W | C20001026M160 |
| R418 | 963 9004 274 | Carbon chip 33kohm 1/16W | C20003336M160 |
| R420 | 963 9004 847 | Carbon chip 3.3kohm 1/16W | C20003326M160 |
| R426,427 | 963 9004 070 | Carbon chip 10kohm 1/16W | C20001036M160 |
| R428 | 963 9004 847 | Carbon chip 3.3kohm 1/16W | for E3 |
| | | | C20003326M160 |
| R428 | 963 9004 070 | Carbon chip 10kohm 1/16W | for E2 |
| | | | C20001036M160 |
| R429 | 963 9004 850 | Carbon chip 82ohm 1/16W | C20008206M160 |
| R430 | 963 9003 807 | Metal film 100ohm 1/4W (NB) | C060010163050 |
| R431 | 963 9004 371 | Carbon chip 5.1kohm 1/16W | C20005126M160 |
| R432 | 963 9004 070 | Carbon chip 10kohm 1/16W | C20001036M160 |
| R434 | 963 9003 807 | Metal film 100ohm 1/4W (NB) | C060010163050 |
| R435 | 963 9004 847 | Carbon chip 3.3kohm 1/16W | C20003326M160 |
| R437 | 963 9004 083 | Carbon chip 100kohm 1/16W | C20001046M160 |
| R438,439 | 963 9004 083 | Carbon chip 100kohm 1/16W | for E3 |
| | | | C20001046M160 |
| R438,439 | 963 9004 164 | Carbon chip 150kohm 1/16W | for E2 |
| | | | C20001546M160 |
| R440,441 | 963 9004 863 | Carbon chip 120kohm 1/16W | for E3 |
| | | | C20001246M160 |
| R440,441 | 963 9004 232 | Carbon chip 220kohm 1/16W | for E2 |
| | | | C20002246M160 |
| R442,443 | 963 9004 847 | Carbon chip 3.3kohm 1/16W | for E3 |
| | | | C20003326M160 |
| R442,443 | 963 9004 216 | Carbon chip 2.2kohm 1/16W | for E2 |
| | | | C20002226M160 |
| R444,445 | 963 9004 481 | Carbon chip 8.2kohm 1/16W | for E3 |
| | | | C20008226M160 |
| R444,445 | 963 9004 847 | Carbon chip 3.3kohm 1/16W | for E2 |
| | | | C20003326M160 |
| R448 | 963 9004 216 | Carbon chip 2.2kohm 1/16W | C20002226M160 |
| R449 | 963 9005 037 | Carbon chip 3.9kohm 1/16W | for E2 |
| | | | C20003926M160 |

| Ref. No. | Part No. | Part Name | Remarks |
|---|---|---|---|
| R450 | 963 9003 398 | Carbon chip 1kohm 1/16W | for E2 |
| | | | C20001026M160 |
| R455 | 963 9004 876 | Carbon chip 330ohm 1/16W | C20003316M160 |
| R456 | 963 9003 385 | Carbon chip 100ohm 1/16W | C20001016M160 |
| R458,459 | 963 9004 342 | Carbon chip 4.7kohm 1/16W | C20004726M160 |
| R462,463 | 963 9004 083 | Carbon chip 100kohm 1/16W | for E3 |
| | | | C20001046M160 |
| R467,468 | 963 9004 203 | Carbon chip 220ohm 1/16W | for E3 |
| | | | C20002216M160 |
| R470 | 963 9003 398 | Carbon chip 1kohm 1/16W | C20001026M160 |
| R471VT | 963 9004 203 | Carbon chip 220ohm 1/16W | C20002216M160 |
| R472 | 963 9003 385 | Carbon chip 100ohm 1/16W | for E2 |
| | | | C20001016M160 |
| R473 | 963 9003 372 | Carbon chip 0ohm 1/16W | for E3 |
| | | | C20000006M160 |
| R473 | 963 9005 040 | Carbon chip 2.4kohm 1/16W | for E2 |
| | | | C20002426M160 |
| R474 | 963 9004 889 | Carbon chip 180ohm 1/16W | for E2 |
| | | | C20001816M160 |
| R475 | 963 9004 122 | Carbon chip 12kohm 1/16W | C20001236M160 |
| R476 | 963 9004 397 | Carbon chip 56kohm 1/16W | C20005636M160 |
| R478 | 963 9004 070 | Carbon chip 10kohm 1/16W | C20001036M160 |
| R479 | 963 9004 083 | Carbon chip 100kohm 1/16W | C20001046M160 |
| R491 | 963 9004 229 | Carbon chip 22kohm 1/16W | C20002236M160 |
| R1024,1025 | 963 0048 006 | Metal film 330ohm 2W | C060033166520 |
| VR401 | 960 0096 606 | Semi fixed resistor 20kohm | C541203115000 |
| VR402 | 963 0056 205 | Semi fixed resistor 50kohm | for E3 |
| | | | C541503115000 |
| VR402 | 960 0096 402 | Semi fixed resistor 100kohm | for E2 |
| | | | C541104115000 |
| VR403 | 963 0052 005 | Semi fixed resistor 200kohm | C541204115000 |
| **CAPACITORS GROUP** | | | |
| C401,402 | 963 9004 685 | Ceramic chip 1000pF/50V | D011102777160 |
| C403 | 963 9004 737 | Ceramic chip 0.022uF/25V | D011223777160 |
| C404 | 963 9004 892 | Ceramic 2pF/50V | D000020007050 |
| C405 | 963 9004 737 | Ceramic chip 0.022uF/25V | D011223777160 |
| C406 | 963 9004 902 | Ceramic chip 18pF/50V | D010180167160 |
| C408 | 960 9004 709 | Ceramic 6pF/50V | D000060007050 |
| C409 | 963 9004 520 | Ceramic 100pF/50V | D005101177520 |
| C410 | 963 9004 915 | Ceramic 470pF/50V | D005471277520 |
| C411 | 963 9004 685 | Ceramic chip 1000pF/50V | D011102777160 |
| C412 | 963 9004 737 | Ceramic chip 0.022uF/25V | D011223777160 |
| C413 | 963 9004 575 | Ceramic chip 100pF/50V | D010101167160 |
| C414 | | Electrolytic 2.2uF/50V | D0402R2087100 |
| C415 | | Electrolytic 47uF/25V | D040470084070 |
| C416 | | Electrolytic 10uF/50V | D040100087050 |
| C417 | | Electrolytic 100uF/16V | D040101083100 |
| C418 | 963 9004 698 | Ceramic chip 0.01uF/50V | D011103777160 |

| Ref. No. | Part No. | Part Name | Remarks |
|---|---|---|---|
| C419 | | Electrolytic 10uF/50V | D040100087050 |
| C420 | 963 9004 591 | Ceramic chip 22pF/50V | D010220167160 |
| C421 | 963 9004 928 | Ceramic chip 24pF/50V | D010240167200 |
| C422 | 963 9004 656 | Ceramic chip 470pF/50V | D010471167160 |
| C423,424 | 963 9004 737 | Ceramic chip 0.022uF/25V | D011223777160 |
| C425 | | Electrolytic 4.7uF/50V | D0404R7087100 |
| C426 | | Electrolytic 3.3uF/50V | D0403R3087100 |
| C427 | | Electrolytic 4.7uF/50V | D0404R7087100 |
| C428 | 963 9004 737 | Ceramic chip 0.022uF/25V | D011223777160 |
| C430 | 963 0021 900 | Mylar film 0.047uF/100V | D02047306C060 |
| C431 | 963 9004 627 | Ceramic chip 33pF/50V | D010330167160 |
| C432 | | Electrolytic 47uF/25V | D040470084070 |
| C433 | 963 9004 737 | Ceramic chip 0.022uF/25V | D011223777160 |
| C434 | | Electrolytic 1uF/50V | for E3 |
| | | | D040010087080 |
| C434 | | Electrolytic 0.33uF/50V | for E2 |
| | | | D040R33087100 |
| C435,436 | 963 9004 737 | Ceramic chip 0.022uF/25V | D011223777160 |
| C437 | | Electrolytic 47uF/25V | D040470084070 |
| C438 | | Electrolytic 1uF/50V | D040010087080 |
| C439 | | Electrolytic 0.22uF/50V | D040R22087100 |
| C440,441 | | Electrolytic 1uF/50V | D040010087080 |
| C442 | | Electrolytic 2.2uF/50V | D0402R2087100 |
| C443 | | Electrolytic 10uF/50V | D040100087050 |
| C444 | | Electrolytic 4.7uF/50V | D0404R7087100 |
| C445 | | Electrolytic 10uF/50V | D040100087050 |
| C446,447 | 963 9005 053 | Ceramic 270pF/50V | for E3 |
| | | | D004271277050 |
| C446,447 | 963 9005 066 | Ceramic 330pF/50V | for E2 |
| | | | D004331277050 |
| C448,449 | 963 9004 960 | Ceramic 470pF/50V | for E3 |
| | | | D004471067060 |
| C450,451 | | Electrolytic 10uF/50V | D040100087050 |
| C453 | 963 9004 614 | Ceramic chip 27pF/50V | D010270167160 |
| C454,455 | 963 9004 575 | Ceramic chip 100pF/50V | for E3 |
| | | | D010101167160 |
| C456 | 963 9004 672 | Ceramic chip 680pF/50V | D010681167160 |
| C459 | | Electrolytic 1uF/50V | for E3 |
| | | | D040010087080 |
| C461 | 963 9004 591 | Ceramic chip 22pF/50V | D010220167160 |
| C462 | 963 9004 656 | Ceramic chip 470pF/50V | for E2 |
| | | | D010471167160 |
| C463 | 963 9004 782 | Mylar film 0.056uF/100V | D02056306C060 |
| C464 | 963 9004 973 | Ceramic 3pF/50V | D000030007050 |
| C471VT | | Electrolytic 1uF/50V | D040010087080 |
| C472VT | 963 9004 753 | Ceramic chip 0.047uF/50V | D011473597160 |
| C500-502 | | Electrolytic 47uF/25V | for E3 |
| | | | D040470084070 |
| C503,504 | | Electrolytic 470uF/10V | for E3 |
| | | | D040471081230 |

| Ref. No. | Part No. | Part Name | Remarks |
|---|---|---|---|
| C506,507 | 963 9004 562 | Ceramic 0.047uF/50V | for E3 |
| | | | D005473597520 |
| C508 | | Electrolytic 100uF/10V | for E3 |
| | | | D040101083100 |
| C509 | 963 9004 504 | Ceramic 0.01uF/50V | for E3 |
| | | | D004103097060 |
| C510 | 963 9004 520 | Ceramic 100pF/50V | for E3 |
| | | | D005101177520 |
| C511 | 960 9008 653 | Mylar film 0.012uF/100V | for E3 |
| | | | D02012306C060 |
| C512 | | Electrolytic 1uF/50V | for E3 |
| | | | D040010087050 |
| C513 | 960 9008 653 | Mylar film 0.012uF/100V | for E3 |
| | | | D02012306C060 |
| C514 | | Electrolytic 47uF/25V | for E3 |
| | | | D040470084070 |
| C515 | | Electrolytic 1uF/50V | for E3 |
| | | | D040010087050 |
| C516 | | Electrolytic 10uF/50V | for E3 |
| | | | D040100085050 |
| C550 | | Electrolytic 0.1uF/50V | D040R10087070 |
| C551 | | Electrolytic 100uF/25V | D040101084060 |
| C928,929 | 963 9004 533 | Ceramic 1000pF/50V | D005102177530 |
| C930 | 960 9003 108 | Ceramic 0.022uF/25V | D005223594520 |
| C931 | | Electrolytic 1uF/50V | D040010087080 |

| OTHER PARTS GROUP | | | | Q'ty |
|---|---|---|---|---|
| CF401,402 | 960 0187 104 | Ceramic filter SFE10.7MA8 | for E3 | 2 |
| | | | E430107000140 | |
| CF401,402 | 960 0177 509 | Ceramic filter SFE10.7MS3 | for E2 | 2 |
| | | | E430107000150 | |
| CF403 | 960 0187 609 | Ceramic resonator BFU450C | E830450000070 | 1 |
| CN401 | 963 0085 409 | 10P connector base | L101100031010 | 1 |
| CN602 | 963 0086 505 | 7P connector base | L101100030710 | 1 |
| CN605 | 963 0086 505 | 7P connector base | for E3 | 1 |
| | | | L101100030710 | |
| CN606 | 963 0085 409 | 10P connector base | L101100031010 | 1 |
| CN607 | 963 0086 709 | 11P connector base | L101100031110 | 1 |
| CN608 | 963 0085 409 | 10P connector base | L101100031010 | 1 |
| CN609 | 963 0086 709 | 11P connector base | L101100031110 | 1 |
| CN907 | 963 0089 308 | 3P connector cord (L=400) | L000401030020 | 1 |
| CP900 | 963 0049 908 | 3P connector base | L101220030010 | 1 |
| CP903 | 963 0086 000 | 2P connector cord (L=80) | L000800020060 | 1 |
| CP905 | 963 0089 405 | 2P connector cord (L=120) | for E2 | 1 |
| | | | L000121020050 | |
| CP906 | 963 0048 909 | 3P connector base | for E3 | 1 |
| | | | L101220030000 | |
| CP906 | 963 0089 502 | 2P connector cord (L=350) | for E2 | 1 |
| | | | L000351020070 | |

| Ref. No. | Part No. | Part Name | Remarks | Q'ty |
|---|---|---|---|---|
| FE401 | 960 0187 706 | Tuner pack | E900401010020 | 1 |
| G401 | — | 1P Wire (L=80) | 8410800010010 | 1 |
| G900 | — | 1P Wire (L=80) | 8410800010010 | 1 |
| J401,402 | 963 9003 369 | Carbon chip 0ohm 1/8W | C200000061300 | 2 |
| J403,404 | 963 9003 369 | Carbon chip 0ohm 1/8W | for E3<br>C200000061300 | 2 |
| J405,406 | 963 9003 369 | Carbon chip 0ohm 1/8W | for E2<br>C200000061300 | 2 |
| J407 | 963 9003 369 | Carbon chip 0ohm 1/8W | C200000061300 | 1 |
| J409 | 963 9003 369 | Carbon chip 0ohm 1/8W | C200000061300 | 1 |
| JACK401 | 960 0188 006 | 2P pin jack | for E3<br>G601020170000 | 1 |
| JACK402 | 963 0052 403 | 3P antenna terminal | G593021068010 | 1 |
| JACK501 | 963 0071 002 | Mini jack | for E3<br>G401065020000 | 1 |
| JACK502 | 960 0188 404 | 3P pin jack | for E3<br>G606030164020 | 1 |
| JACK503 | 960 0194 605 | 2P pin jack | for E3<br>G601020163010 | 1 |
| JACK900 | 960 0187 502 | Headphone jack (D6.5) | G402038400031 | 1 |
| L401,402 | 963 0052 102 | Inductor 1uH | D3301R0001020 | 2 |
| L403 | 963 0056 409 | MW IFT (RBW07VB-K5025) | D950500500010 | 1 |
| ⚠ OUTLE909 | 960 0143 203 | AC outlet | for E2<br>G435040110000 | 1 |
| SW925 | 963 0045 708 | Tact switch | G180000270010 | 1 |
| SW927 | 963 0045 708 | Tact switch | G180000270010 | 1 |
| SW929 | 960 0176 209 | Push switch | for E3<br>G000122000010 | 1 |
| SW929 | 963 0056 603 | Push switch | for E2<br>G000040890000 | 1 |
| SW930 | 963 0045 708 | Tact switch | G180000270010 | 1 |
| SW932 | 963 0045 708 | Tact switch | G180000270010 | 1 |
| SW934 | 963 0045 708 | Tact switch | G180000270010 | 1 |
| SW936 | 963 0045 708 | Tact switch | G180000270010 | 1 |
| T401 | 960 0186 600 | MW IFT (PCFMAF-270) | D950500200000 | 1 |
| T402 | 960 0007 349 | FM DET trans. | D951561100000 | 1 |
| T403 | 960 0007 352 | FM DET trans. | D951561200000 | 1 |
| T404,405 | 960 0071 207 | MPX filter | for E2<br>E401500100000 | 2 |
| T406 | 960 0037 607 | Antibirdie filter | for E2<br>E403126832410 | 1 |
| X401 | 960 0187 405 | Crystal 7.2MHz | E8007R2000071 | 1 |

| Ref. No. | Part No. | Part Name | Remarks | Q'ty |
|---|---|---|---|---|
| X402 | 963 0043 302 | Ceramic resonator | CSB456F11<br>E830456000050 | 1 |
| ★ | 963 0054 003 | Shield cover | 3070210056000 | 1 |
| ★ | 963 0088 406 | Earth plate C | 4470210206000 | 1 |
| ★ | 960 0184 000 | Screw bracket | 4010210196000 | 2 |

## EXPLODED VIEW

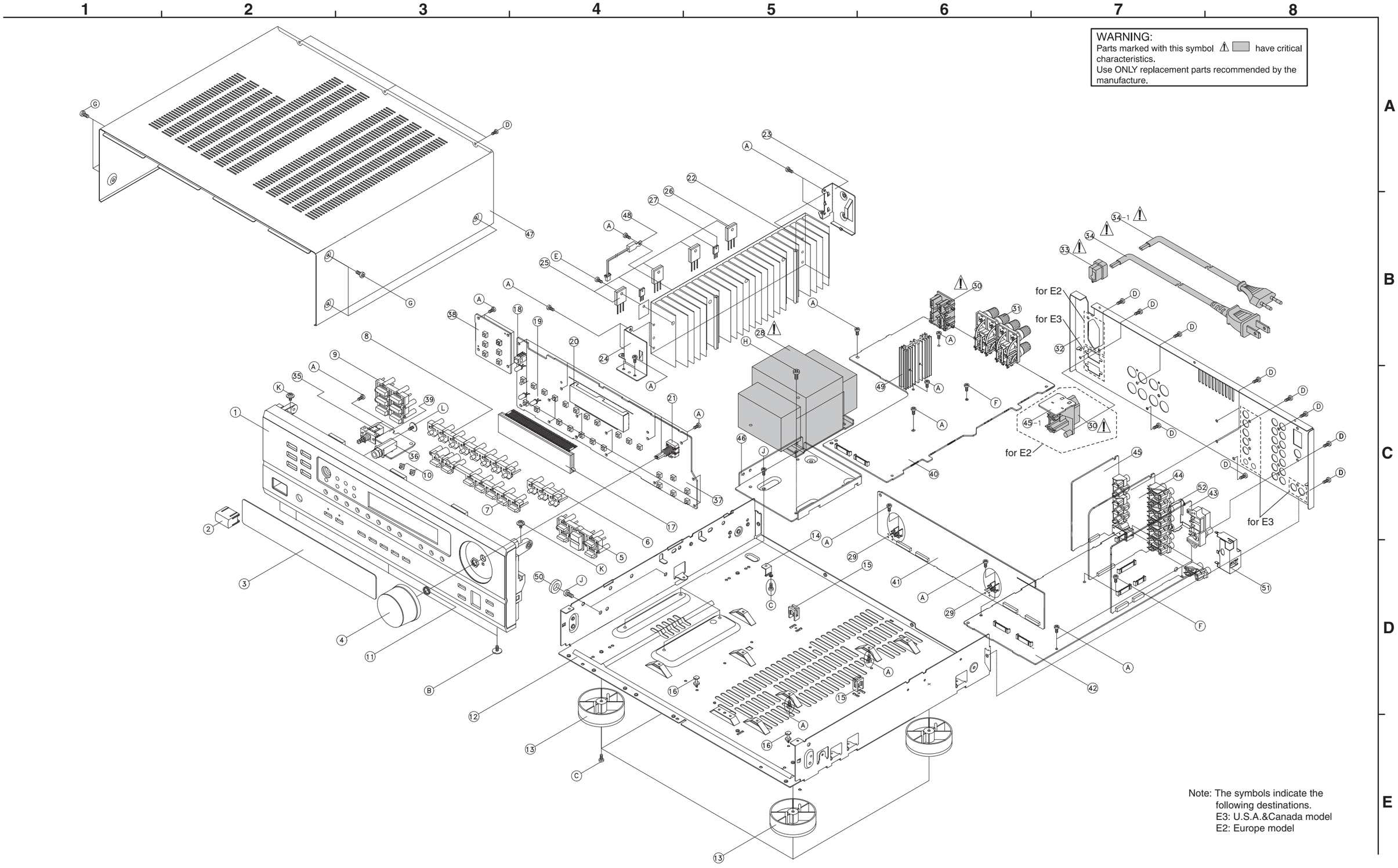

# PARTS LIST OF EXPLODED VIEW

**Note:** The symbols in the column "Remarks" indicate the following destinations.
E3: U.S.A./Canada model E2: Europe model

| Ref. No. | Part No. | Part Name | Remarks | Q'ty |
|---|---|---|---|---|
| | 963 0080 802 | Main P.W.B. unit Ass'y | for E3 | 1 |
| | | | 7025HK0011010 | |
| | 963 0080 815 | Main P.W.B. unit Ass'y | for E2 | 1 |
| | | | 7025HK0011020 | |
| 40 | | Main P.W.B. unit | | |
| 44 | | Input P.W.B. unit | | |
| | 963 0080 909 | Front P.W.B. unit Ass'y | for E3 | 1 |
| | | | 7025HK0011011 | |
| | 963 0080 912 | Front P.W.B. unit Ass'y | for E2 | 1 |
| | | | 7025HK0011021 | |
| 37 | | Front P.W.B. unit | | |
| 42 | | Volume P.W.B. unit | | |
| | 963 0081 005 | Tuner P.W.B. unit Ass'y | for E3 | 1 |
| | | | 7025HK0011012 | |
| | 963 0081 018 | Tuner P.W.B. unit Ass'y | for E2 | 1 |
| | | | 7025HK0011022 | |
| 38 | | Switch P.W.B. unit | | |
| 39 | | Power SW/HP P.W.B. unit | | |
| 41 | | Connector P.W.B. unit | | |
| 43 | | Tuner P.W.B. unit | | |
| 45 | | Video P.W.B. unit | for E3 | |
| 45-1 | | Outlet P.W.B. unit | for E2 | |
| 1 | 963 0076 308 | Front panel | for E3 | 1 |
| | | | 3067210261040Z | |
| 1 | 963 0076 311 | Front panel | for E2 | 1 |
| | | | 3067210261050Z | |
| 2 | 960 0185 009 | Power button | 5090210201000Z | 1 |
| 3 | 963 0076 612 | Display window | 5077210262040 | 1 |
| 4 | 963 0054 906 | Volume knob | 5087210191010Z | 1 |
| 5 | 963 0053 703 | 5key button | 5097210471000Z | 1 |
| 6 | 963 0053 606 | 3key button | 5090210511000Z | 1 |
| 7 | 963 0053 415 | 7(A)key button | 5090210491001Z | 1 |
| 8 | 963 0053 509 | 8key button | 5090210501000Z | 1 |
| 9 | 963 0053 305 | 6key button | 5090210481000Z | 1 |
| 10 | 960 0191 417 | LED lens | 3710210043001 | 2 |
| 11 | 963 0051 006 | Knob spring | 3720210116000 | 1 |
| 12 | 960 0198 229 | Main chassis | 3200210146301 | 1 |
| 13 | 960 0183 904 | Foot Ass'y | 400802006101C | 4 |
| 14 | 960 0184 107 | Support bracket | 4010210206000 | 1 |
| 15 | 960 0003 301 | P.W.B. support | 4070001601010 | 2 |
| 16 | 963 0051 103 | Card spacer | 4300210062000 | 2 |
| 17 | 960 0180 509 | FLT (16-ST-42GNK) | FL900 | 1 |
| | | | K530164200010 | |
| 18 | 960 0181 100 | Remocon sensor NJL64H380A | REM900 | 1 |
| | | | E940643800000 | |
| 19 | 960 0197 204 | LED HL50RDRF4T | LED900-902 | 3 |
| | | | K500052015010 | |
| 20 | 960 0184 408 | FLT holder | 4320200026000 | 1 |
| 21 | 960 0181 207 | Rotary encoder (EC16B2420431) | SW924 | 1 |
| | | | G121162420400 | |

| Ref. No. | Part No. | Part Name | Remarks | Q'ty |
|---|---|---|---|---|
| 22 | — | Heat sink (main) | 2120210298100Z | 1 |
| 23 | 960 0184 204 | Heat sink bracket B | 4010210386000 | 1 |
| 24 | 960 0184 301 | Heat sink bracket F | 4010210396000 | 1 |
| 25 | 960 0090 107 | Transistor 2SB1559Y | Q113,114 | 2 |
| | | | J5011559Y1170 | |
| 26 | 960 0090 000 | Transistor 2SD2389Y | Q111,112 | 2 |
| | | | J5032389Y1170 | |
| 27 | 963 0058 106 | Transistor 2SD947F | Q109,110 | 2 |
| | | | J503947F00000 | |
| ⚠ 28 | 963 0088 901 | Power trans. | for E3 | 1 |
| | | | 8200858630100 | |
| ⚠ 28 | 963 0088 914 | Power trans. | for E2 | 1 |
| | | | 8200858630110 | |
| 29 | 960 0184 000 | Screw bracket | 4010210196000 | 2 |
| ⚠ 30 | 960 0181 508 | 2P AC outlet | JACK104, for E3 | 1 |
| | | | G435204004010 | |
| ⚠ 30 | 960 0143 203 | AC outlet | OUTLE909, for E2 | 1 |
| | | | G435040110000 | |
| 31 | 963 0089 201 | 8P speaker terminal | JACK102 | 1 |
| | | | G61408103610A | |
| 32 | 963 0076 502 | Back panel | for E3 | 1 |
| | | | 3207210766600 | |
| 32 | 963 0076 515 | Back panel | for E2 | 1 |
| | | | 3207210766700 | |
| ⚠ 33 | 960 0192 403 | Cord bush | 4380210002000 | 1 |
| ⚠ 34 | 960 0166 400 | AC cord | for E3 | 1 |
| | | | L068020030010 | |
| ⚠ 34-1 | 960 0202 500 | AC cord | for E2 | 1 |
| | | | L068040011010 | |
| 35 | 960 0176 209 | Push switch | SW929, for E3 | 1 |
| | | | G000122000010 | |
| 35 | 963 0056 603 | Push switch | SW929, for E2 | 1 |
| | | | G000040890000 | |
| 36 | 960 0187 502 | Headphone jack (D6.5) | JACK900 | 1 |
| | | | G402038400031 | |
| 46 | 963 0072 205 | Trans bracket | 4010210466001 | 1 |
| 47 | 963 0053 017 | Top cover | 3000210096001 | 1 |
| 48 | 960 0187 900 | Posistor P43T7D330BW16 | F320161001020 | 1 |
| 49 | — | Heat sink | 2120043538050 | 1 |
| 50 | 963 0072 302 | Rubber cushion | 4050210165000 | 2 |
| 51 | 963 0054 003 | Shield cover | 3070210056000 | 1 |
| 52 | 963 0088 406 | Earth plate C | 4470210206000 | 1 |
| 53 | 963 0081 607 | Side bracket | for E2 | 1 |
| | | | 4010210686000 | |
| 54 | 963 0044 602 | P.W.B. support | for E2 | 1 |
| | | | 4070210192000 | |
| ★ 55 | 963 0089 104 | Rubber sheet | 1210210235000 | 3 |
| ★ 56 | 960 0155 301 | Wire clamper | for E3 | 4 |
| | | | 4330040343010 | |
| ★ 56 | 960 0155 301 | Wire clamper | for E2 | 5 |
| | | | 4330040343010 | |
| ★ 57 | 963 0054 207 | Fuse caution label | for E3 | 1 |
| | | | 5527042410020 | |

| Ref. No. | Part No. | Part Name | Remarks | Q'ty |
|---|---|---|---|---|
| ★ 58 | 963 0089 007 | FFC cable | CP901<br>L301171230010 | 1 |
| **SCREWS** | | | | |
| A | 963 0018 007 | Screw 3×8 (B)-Z | B020030081B10 | 44 |
| B | 960 9008 527 | Screw 3×8 (B) W-B | 1500001456020 | 4 |
| C | 963 0048 200 | Screw 3×10 (B)-Z | B020030101B10 | 5 |
| D | 960 0108 714 | Screw 3×10 (B)-B | for E3<br>B020030103B11 | 24 |
| D | 960 0108 714 | Screw 3×10 (B)-B | for E2<br>B020030103B11 | 19 |
| E | 963 9004 009 | Screw 3×14 (P) SW W-Z | B018230141H10 | 6 |
| F | 963 0018 104 | Screw 3×17 (B)-Z | B020030171B10 | 2 |
| G | 963 0048 307 | Screw 4×8 (B)-B | 1500040083B10 | 6 |
| H | 963 9008 417 | Screw 4×8 (P) SW W-Z | B028940081B10 | 4 |
| J | 963 9004 025 | Screw 4×6 (S)-Z | B020740061B10 | 6 |
| K | 963 9004 038 | Screw 3×8 (B) W-Z | 1500001206010 | 2 |
| L | 960 9008 420 | Screw 3×8 (B) W-Z | 1500001456010 | 1 |

## PACKING VIEW

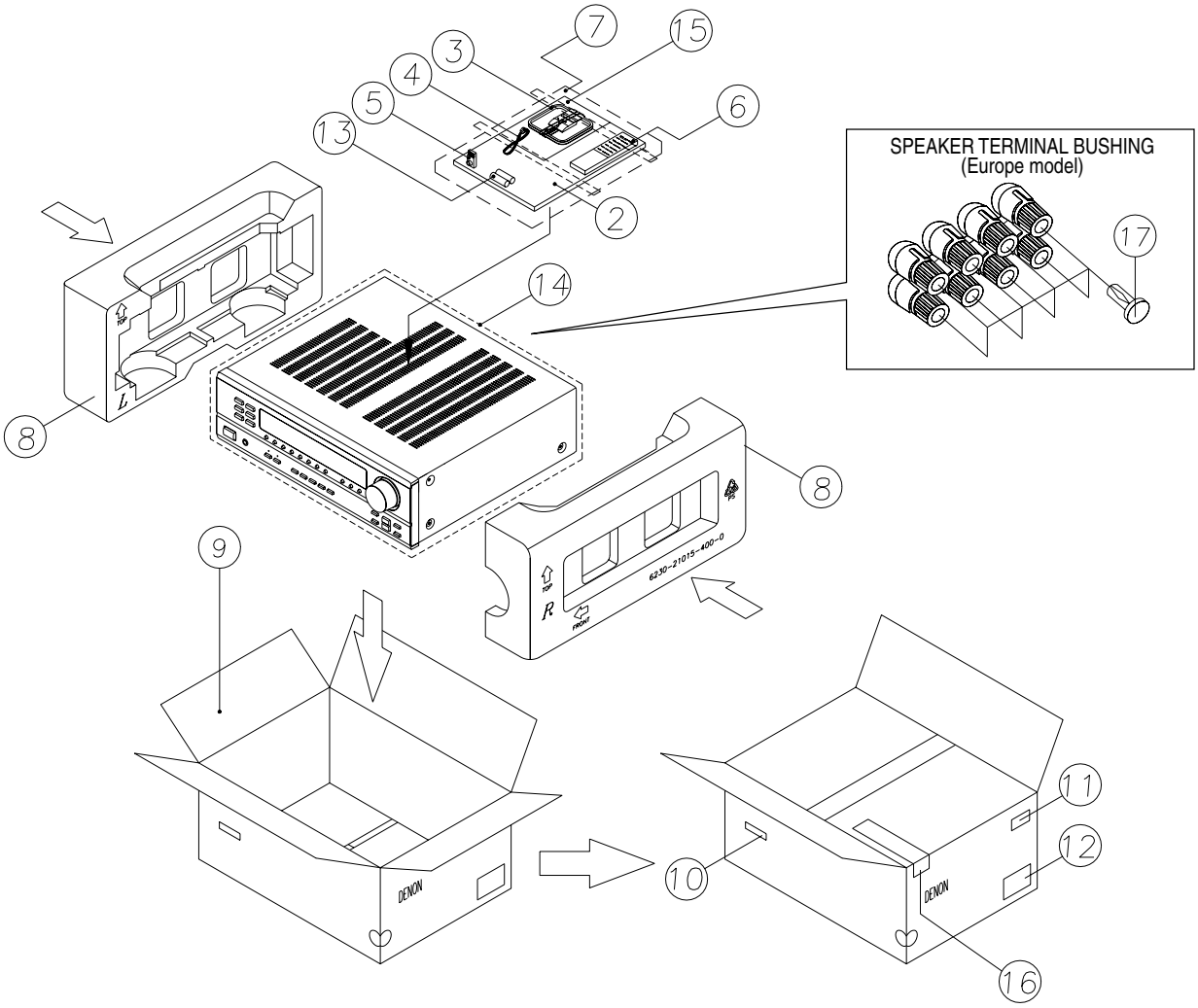


## PARTS LIST OF PACKING & ACCESSORIES

**Note:** The symbols in the column "Remarks" indicate the following destinations.
E3: U.S.A./Canada model E2: Europe model

| Ref. No. | Part No. | Part Name | Remarks | Q'ty |
|---|---|---|---|---|
| 2 | 963 0080 608 | Instruction manual | for E3 | 1 |
| | | | 5707210170250 | |
| 2 | 963 0080 611 | Instruction manual | for E2 | 1 |
| | | | 5707210170260 | |
| 3 | 963 0052 306 | AM loop antenna | E605010090000 | 1 |
| 4 | 963 0081 102 | FM antenna wire | E605010010000 | 1 |
| 5 | 963 0052 704 | FM antenna adapter | L109000180010 | 1 |
| 6 | 963 0088 707 | Remote control unit RC-895 | for E3 | 1 |
| | | | 8300895000010 | |
| 6 | 963 0088 804 | Remote control unit RC-907 | for E2 | 1 |
| | | | 8300907000010 | |
| 7 | 963 0045 106 | Poly bag | 6330000240000 | 1 |
| 8 | 963 0193 101 | Cushion (L/R) | 6230210154001 | 1 |
| 9 | 963 0080 705 | Carton case | for E3 | 1 |
| | | | 6007210310040 | |
| 9 | 963 0080 718 | Carton case | for E2 | 1 |
| | | | 6007210310070 | |

| Ref. No. | Part No. | Part Name | Remarks | Q'ty |
|---|---|---|---|---|
| 10 | — | RDS label | for E2 | 2 |
| | | | 5507051670010 | |
| 11 | — | UPC label | for E3 | 1 |
| | | | 5507002330100 | |
| 11 | — | POS label | for E2 | 1 |
| | | | 5507002340090 | |
| 12 | — | Control label | 5500014920010 | 2 |
| 13 | — | Battery (R6P/AA) | G670001R50010 | 2 |
| 14 | 960 0185 601 | Set poly bag | 6330210019000 | 1 |
| 15 | — | S.S. list (EX) | 5777001620012 | 1 |
| 16 | — | DEL warranty home | for E3 | 1 |
| | | | 5777001610020 | |
| 17 | 960 0093 104 | Speaker terminal bushing | for E2 | 8 |
| | | | 2410040353010 | |

## WIRING DIAGRAM

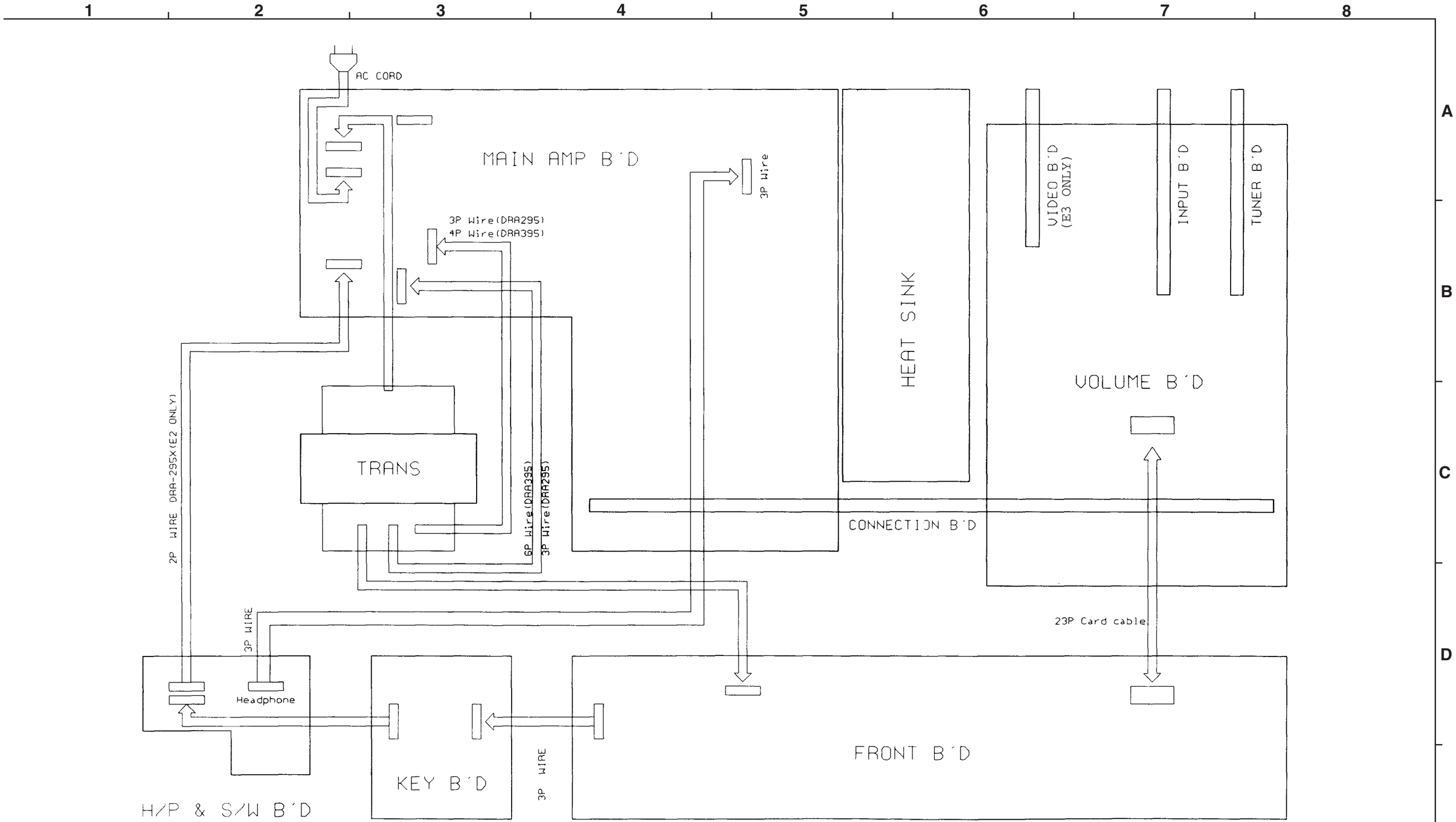


DRA-295 WIRING DIAGRAM

## SCHEMATIC DIAGRAMS(1/5)

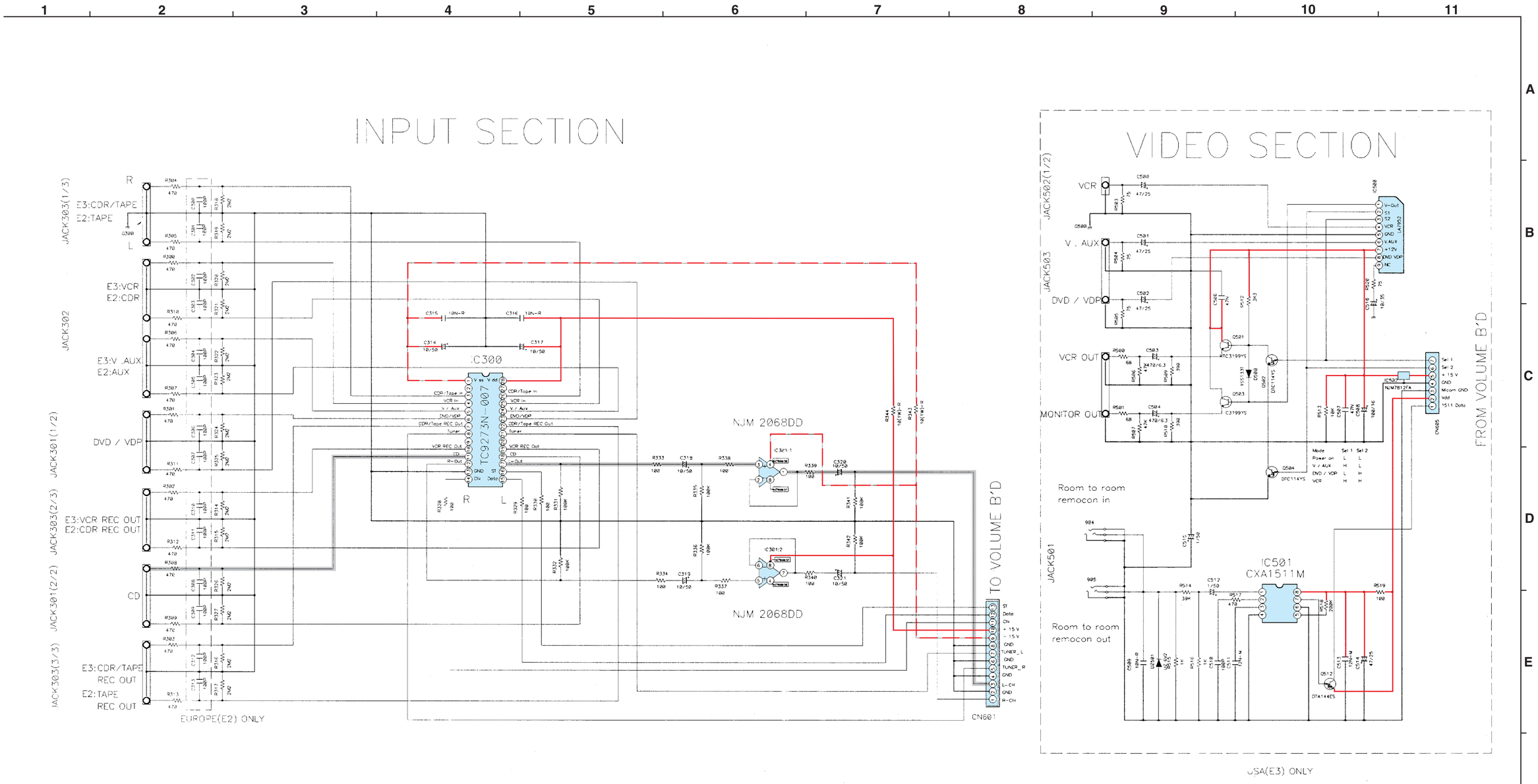


+ B LINE
– B LINE
SIGNAL LINE

NOTICE
ALL RESISTANCE VALUES IN OHM. k=1,000 OHM M=1,000,000 OHM
ALL CAPACITANCE VALUES IN MICRO FARAD. P=MICRO-MICRO FARAD
EACH VOLTAGE AND CURRENT ARE MEASUERD AT MO SIGNAL INPUT CONDITION.
CIRCUIT AND PARTS ARE SUBJECT TO CHANGE WITHOUT PRIOR NOTICE.

WARNING:
Parts marked with this symbol ⚠ ▭ have critical characteristics.
Use ONLY replacement parts recommended by the manufacture.

CAUTION:
Before returning the unit to the customer, make sure you make either (1) a leakage current check or (2) a line to chassis resistance check. If the leakage current exceeds 0.5 milliamps, or if the resistance from chassis to either side of the power card is less than 460kohms, the unit is defective.

WARNING:
DO NOT return the unit to the customer until the problem is located and corrected.

SCHEMATIC DIAGRAMS(1/5)
INPUT UNIT
VIDEO UNIT

## SCHEMATIC DIAGRAMS(1/5)

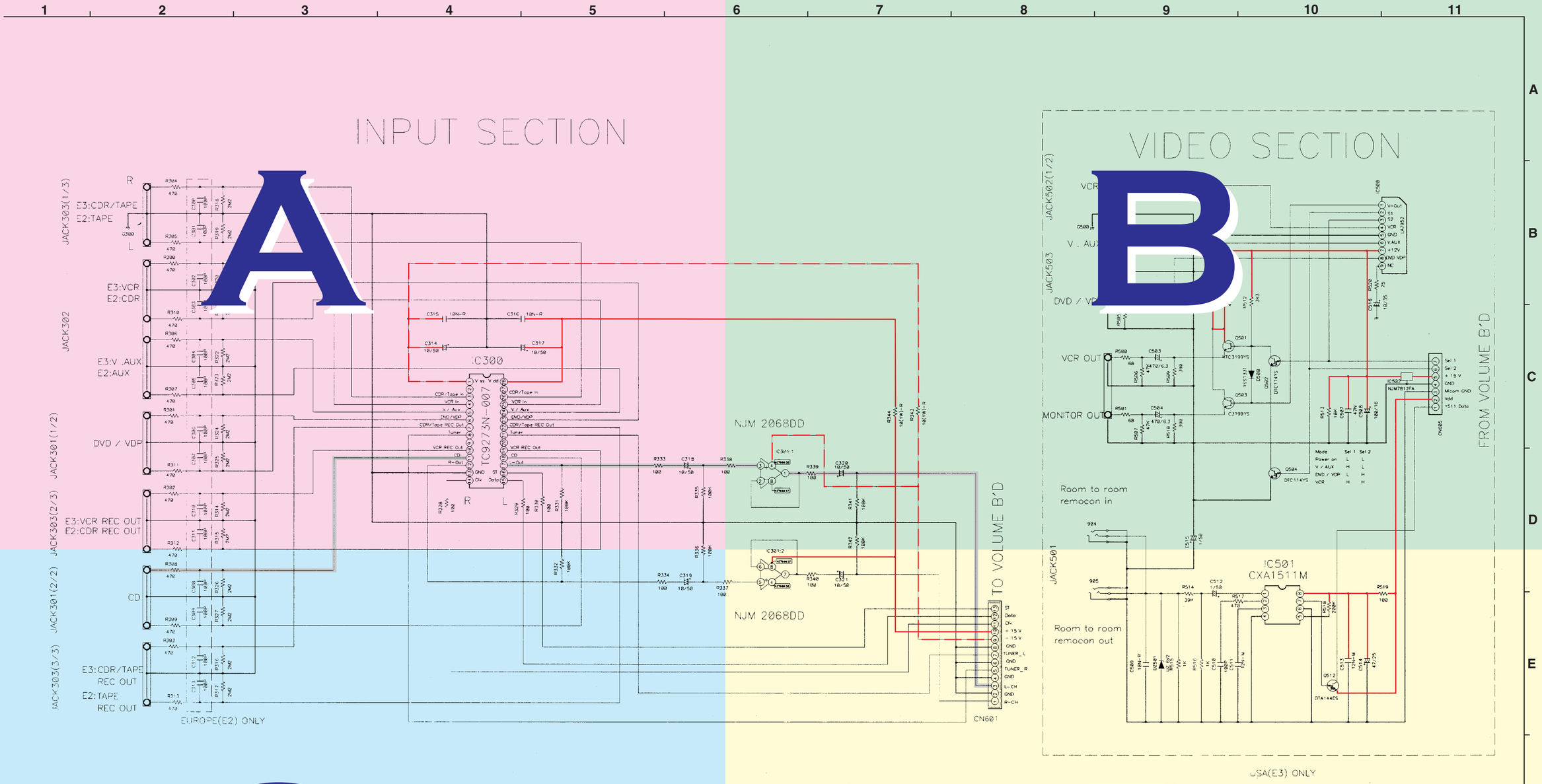


+ B LINE
– B LINE
SIGNAL LINE

NOTICE
ALL RESISTANCE VALUES IN OHM. k=1,000 OHM M=1,000,000 OHM
ALL CAPACITANCE VALUES IN MICRO FARAD. P=MICRO-MICRO FARAD
EACH VOLTAGE AND CURRENT ARE MEASUERD AT MO SIGNAL INPUT CONDITION.
CIRCUIT AND PARTS ARE SUBJECT TO CHANGE WITHOUT PRIOR NOTICE.

WARNING:
Parts marked with this symbol ⚠ have critical characteristics.
Use ONLY replacement parts recommended by the manufacture.

CAUTION:
Before returning the unit to the customer, make sure you make either (1) a leakage current check or (2) a line to chassis resistance check. If the leakage current exceeds 0.5 milliamps, or if the resistance from chassis to either side of the power card is less than 460kohms, the unit is defective.

WARNING:
DO NOT return the unit to the customer until the problem is located and corrected.

SCHEMATIC DIAGRAMS(1/5)
INPUT UNIT
VIDEO UNIT

## SCHEMATIC DIAGRAMS(1/5)

1 2 3 4 5 6

# INPUT SECTION

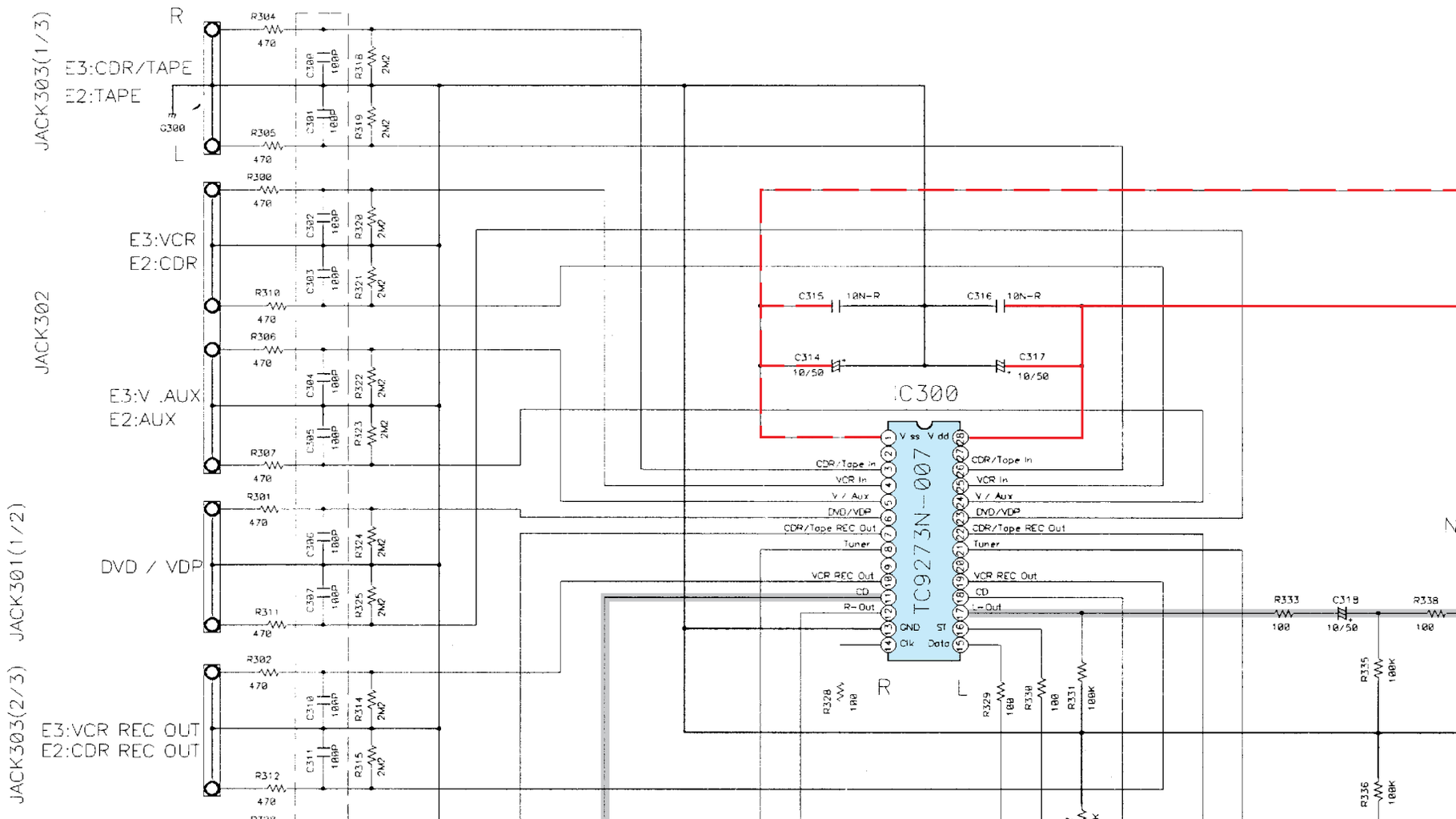

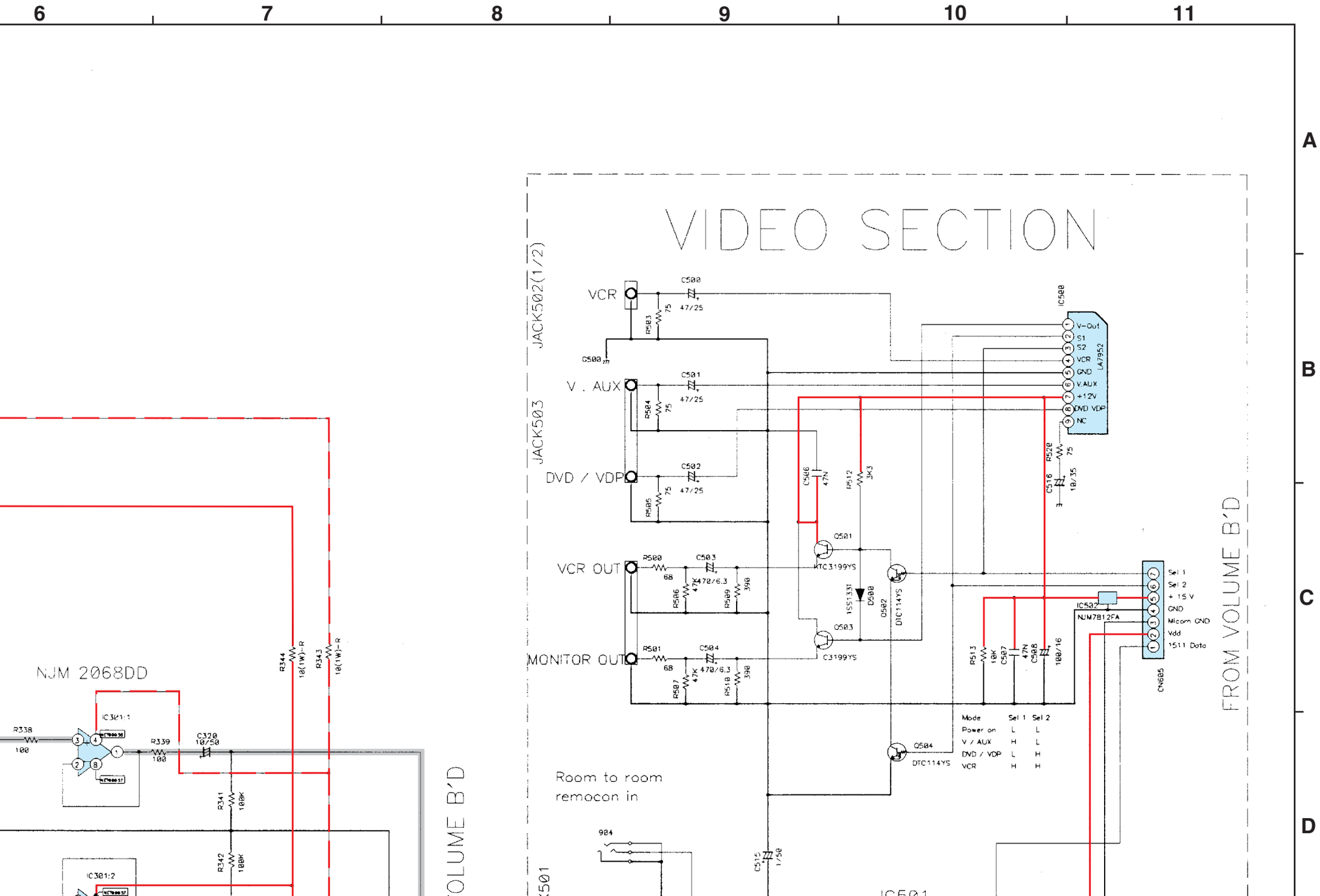
6
7
8
9
10
11
A
B
C
D
VIDEO SECTION
JACK502(1/2)
JACK503
VCR
V . AUX
DVD / VDP
VCR OUT
MONITOR OUT
C500
C501
C502
C503
C504
R503
R504
R505
R500
R501
R506
R507
R509
R510
Q500
Q501
Q502
Q503
Q504
DTC114YS
DTC3199YS
D500
D502
1SS133T
C546
47N
R512
3K3
IC500
LA7952
V-Out
S1
S2
VCR
GND
V.AUX
+12V
DVD VDP
NC
R520
C516
10/35
IC502
NJM7812FA
R513
10K
C507
C508
100/16
CN685
Sel 1
Sel 2
+ 15 V
GND
Micom GND
Vdd
1511 Data
FROM VOLUME B'D
Mode
Power on
V / AUX
DVD / VDP
VCR
Sel 1
Sel 2
Room to room
remocon in
984
C515
1/50
NJM 2068DD
IC301:1
IC301:2
R338
100
R339
100
C320
10/50
R341
100K
R342
100K
R344
10(1W)-R
R343
10(1W)-R
TO VOLUME B'D

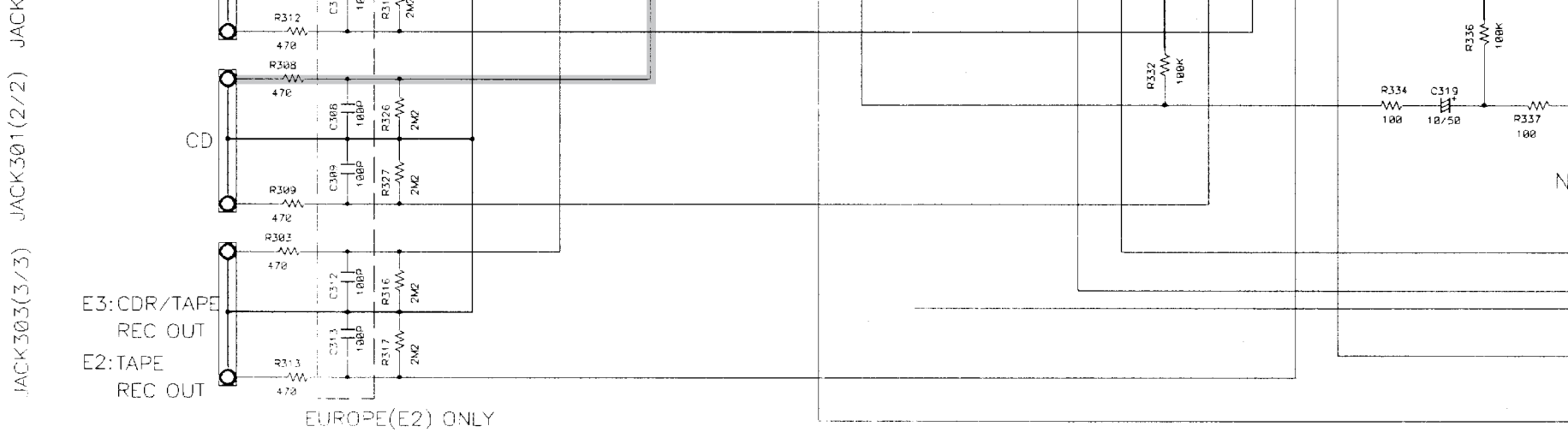


## NOTICE

ALL RESISTANCE VALUES IN OHM. k=1,000 OHM M=1,000,000 OHM
ALL CAPACITANCE VALUES IN MICRO FARAD. P=MICRO-MICRO FARAD
EACH VOLTAGE AND CURRENT ARE MEASUERD AT MO SIGNAL INPUT CONDITION.
CIRCUIT AND PARTS ARE SUBJECT TO CHANGE WITHOUT PRIOR NOTICE.

## WARNING:

Parts marked with this symbol ⚠ ▭ ha
Use ONLY replacement parts recommen

## CAUTION:

Before returning the unit to the customer,
leakage current check or (2) a line to cha
current exceeds 0.5 milliamps, or if the re
of the power card is less than 460kohms

## WARNING:

DO NOT return the unit to the customer u
corrected.

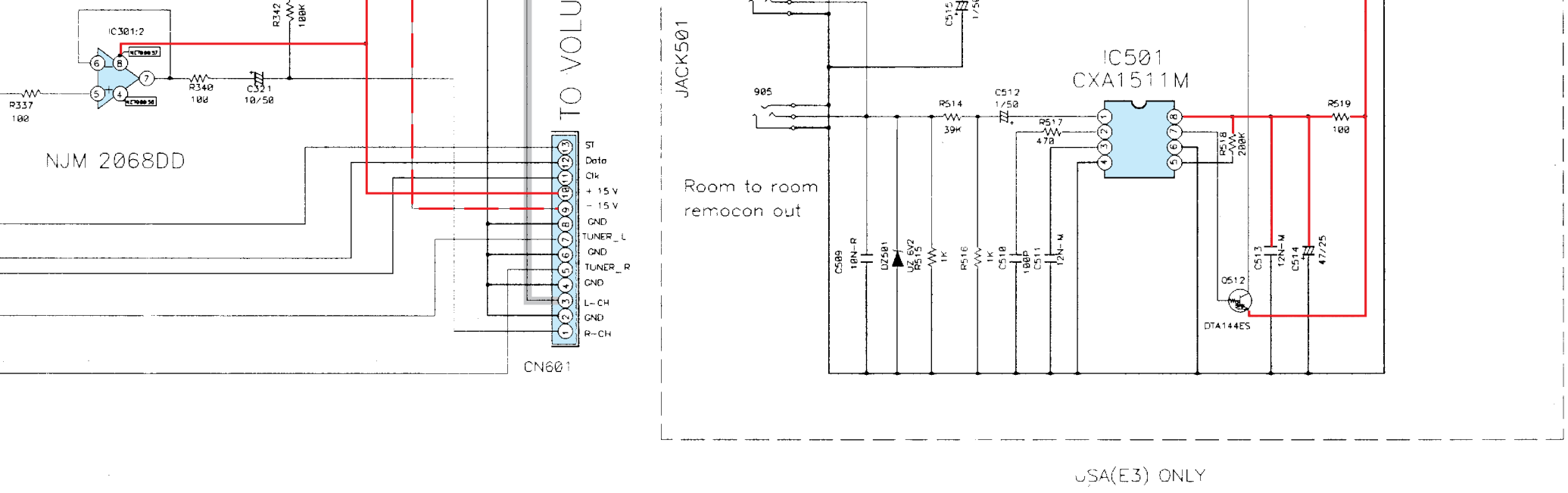


+B LINE

–B LINE

SIGNAL LINE

have critical characteristics.
commended by the manufacture.

ustomer, make sure you make either (1) a
e to chassis resistance check. If the leakage
r if the resistance from chassis to either side
0kohms, the unit is defective.

stomer until the problem is located and

# SCHEMATIC DIAGRAMS(1/5)

INPUT UNIT

VIDEO UNIT

E

F

G

H

## SCHEMATIC DIAGRAMS(2/5)

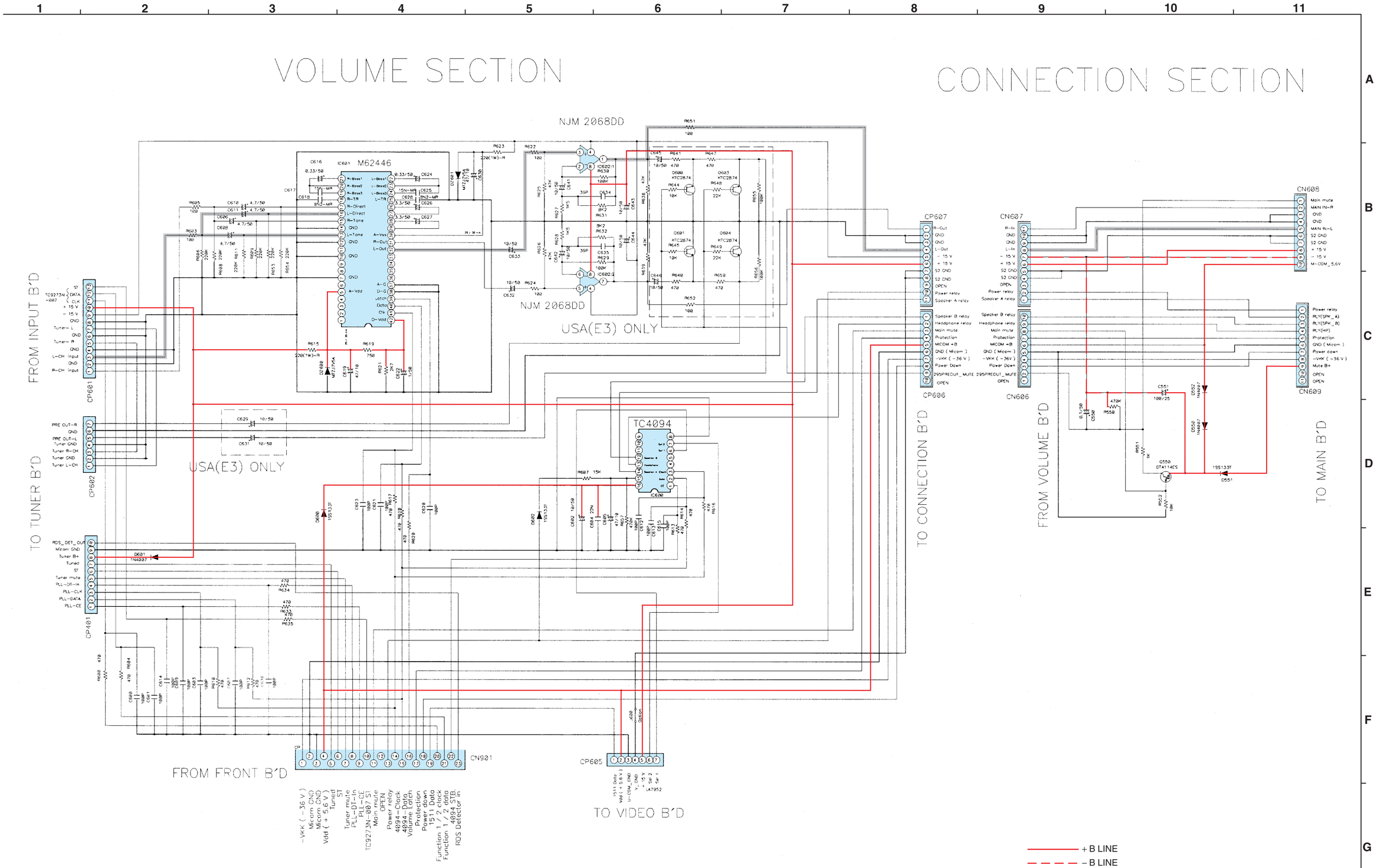


### NOTICE

ALL RESISTANCE VALUES IN OHM. k=1,000 OHM M=1,000,000 OHM
ALL CAPACITANCE VALUES IN MICRO FARAD. P=MICRO-MICRO FARAD
EACH VOLTAGE AND CURRENT ARE MEASUERD AT MO SIGNAL INPUT CONDITION.
CIRCUIT AND PARTS ARE SUBJECT TO CHANGE WITHOUT PRIOR NOTICE.

### WARNING:

Parts marked with this symbol ⚠ ▭ have critical characteristics.
Use ONLY replacement parts recommended by the manufacture.

### CAUTION:

Before returning the unit to the customer, make sure you make either (1) a leakage current check or (2) a line to chassis resistance check. If the leakage current exceeds 0.5 milliamps, or if the resistance from chassis to either side of the power card is less than 460kohms, the unit is defective.

### WARNING:

DO NOT return the unit to the customer until the problem is located and corrected.

SCHEMATIC DIAGRAMS(2/5)
VOLUME UNIT
CONNECTOR UNIT

## SCHEMATIC DIAGRAMS(2/5)

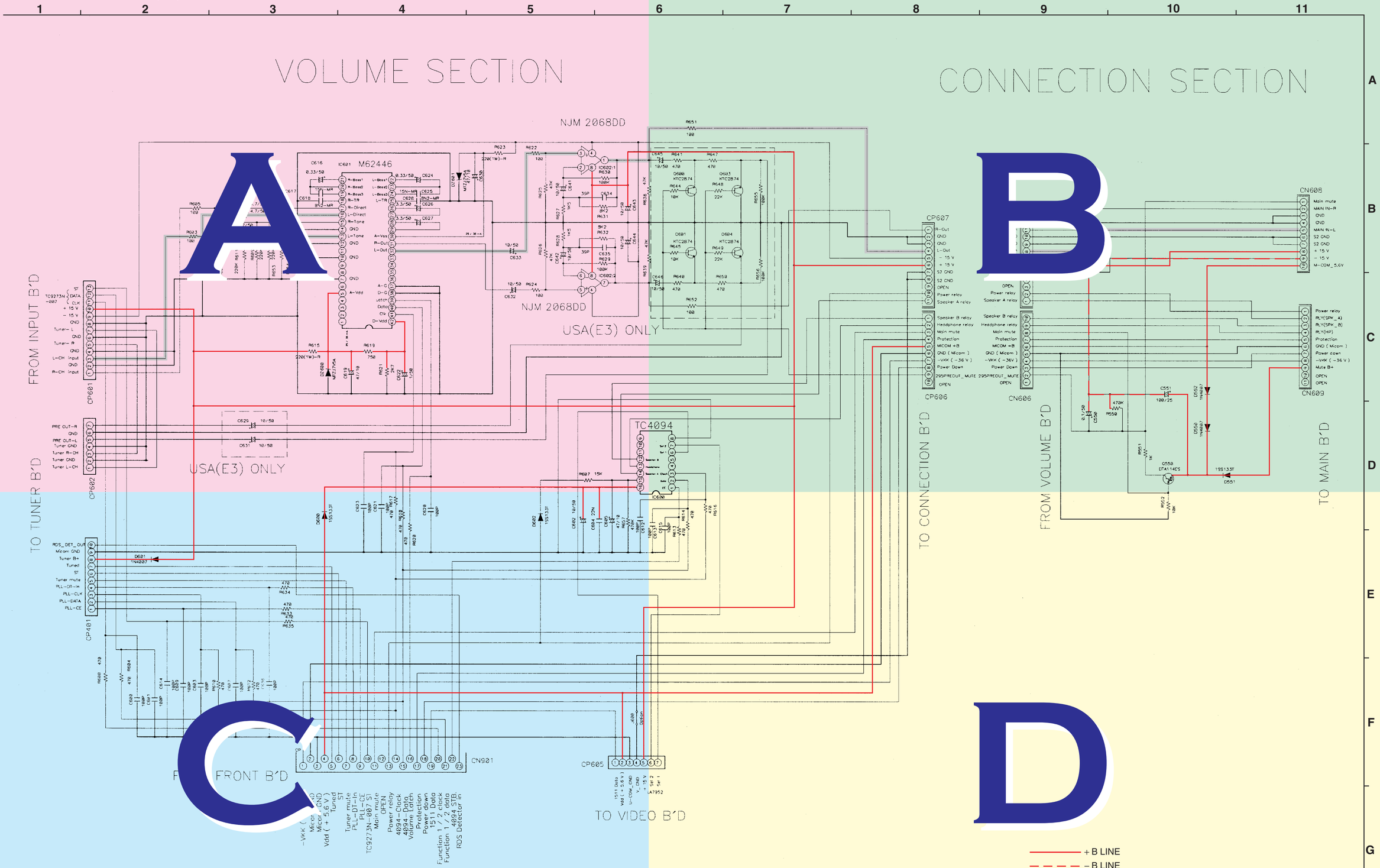


NOTICE
ALL RESISTANCE VALUES IN OHM. k=1,000 OHM M=1,000,000 OHM
ALL CAPACITANCE VALUES IN MICRO FARAD. P=MICRO-MICRO FARAD
EACH VOLTAGE AND CURRENT ARE MEASUERD AT MO SIGNAL INPUT CONDITION.
CIRCUIT AND PARTS ARE SUBJECT TO CHANGE WITHOUT PRIOR NOTICE.

WARNING:
Parts marked with this symbol ⚠ ▭ have critical characteristics.
Use ONLY replacement parts recommended by the manufacture.

CAUTION:
Before returning the unit to the customer, make sure you make either (1) a leakage current check or (2) a line to chassis resistance check. If the leakage current exceeds 0.5 milliamps, or if the resistance from chassis to either side of the power card is less than 460kohms, the unit is defective.

WARNING:
DO NOT return the unit to the customer until the problem is located and corrected.

SCHEMATIC DIAGRAMS(2/5)
VOLUME UNIT
CONNECTOR UNIT

## SCHEMATIC DIAGRAMS(2/5)

1 2 3 4 5 6

# VOLUME SECTION

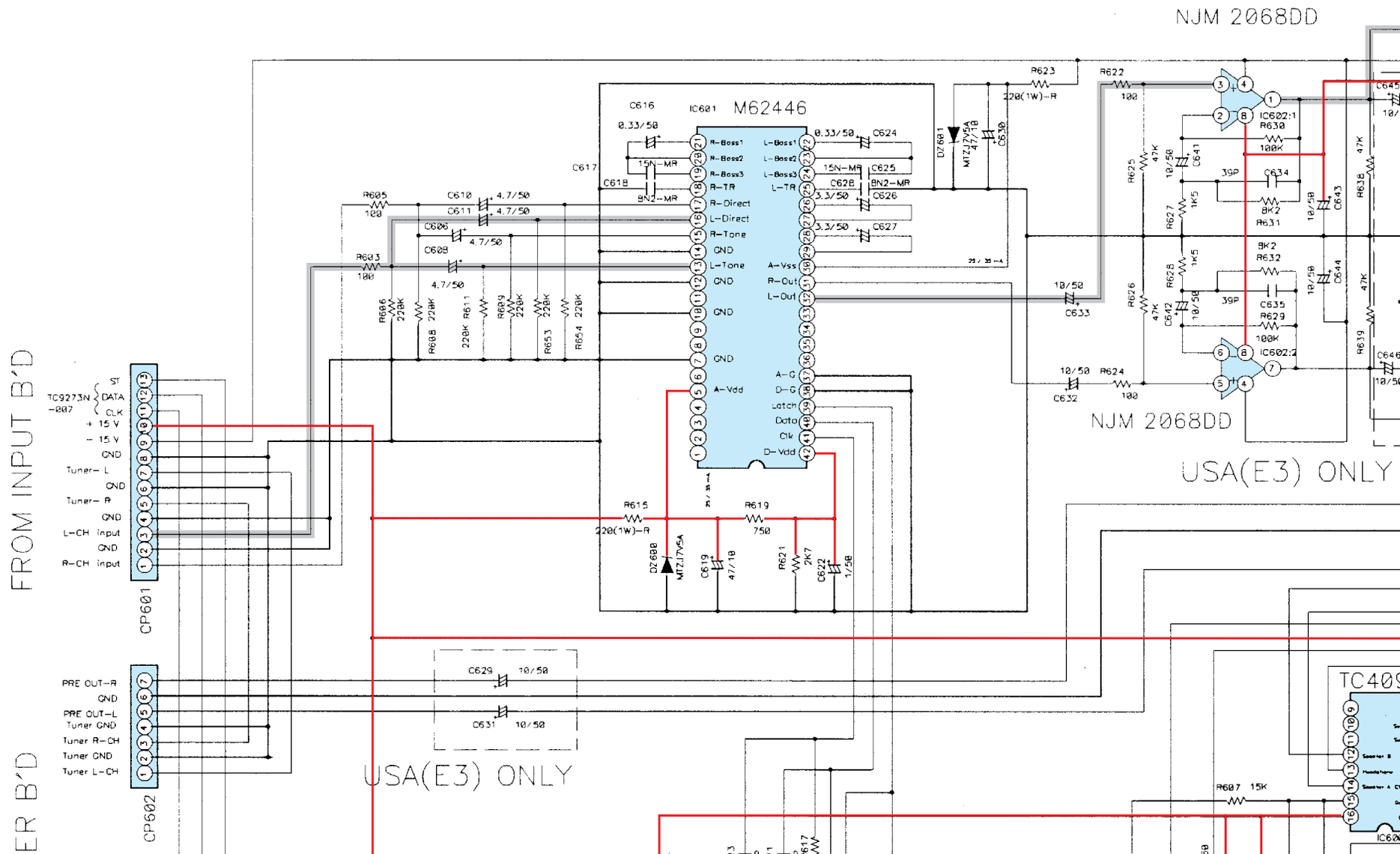

# CONNECTION SECTION

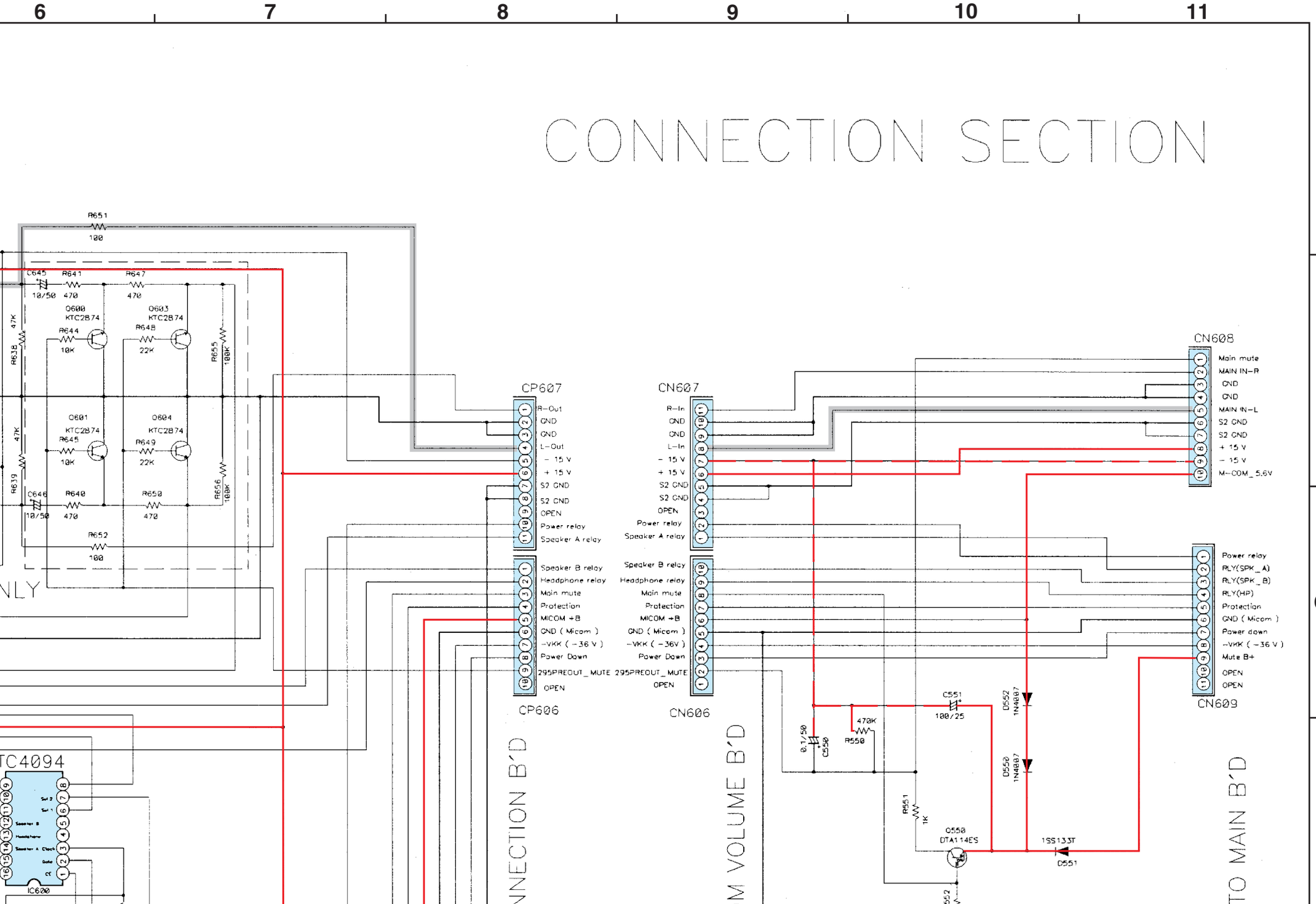

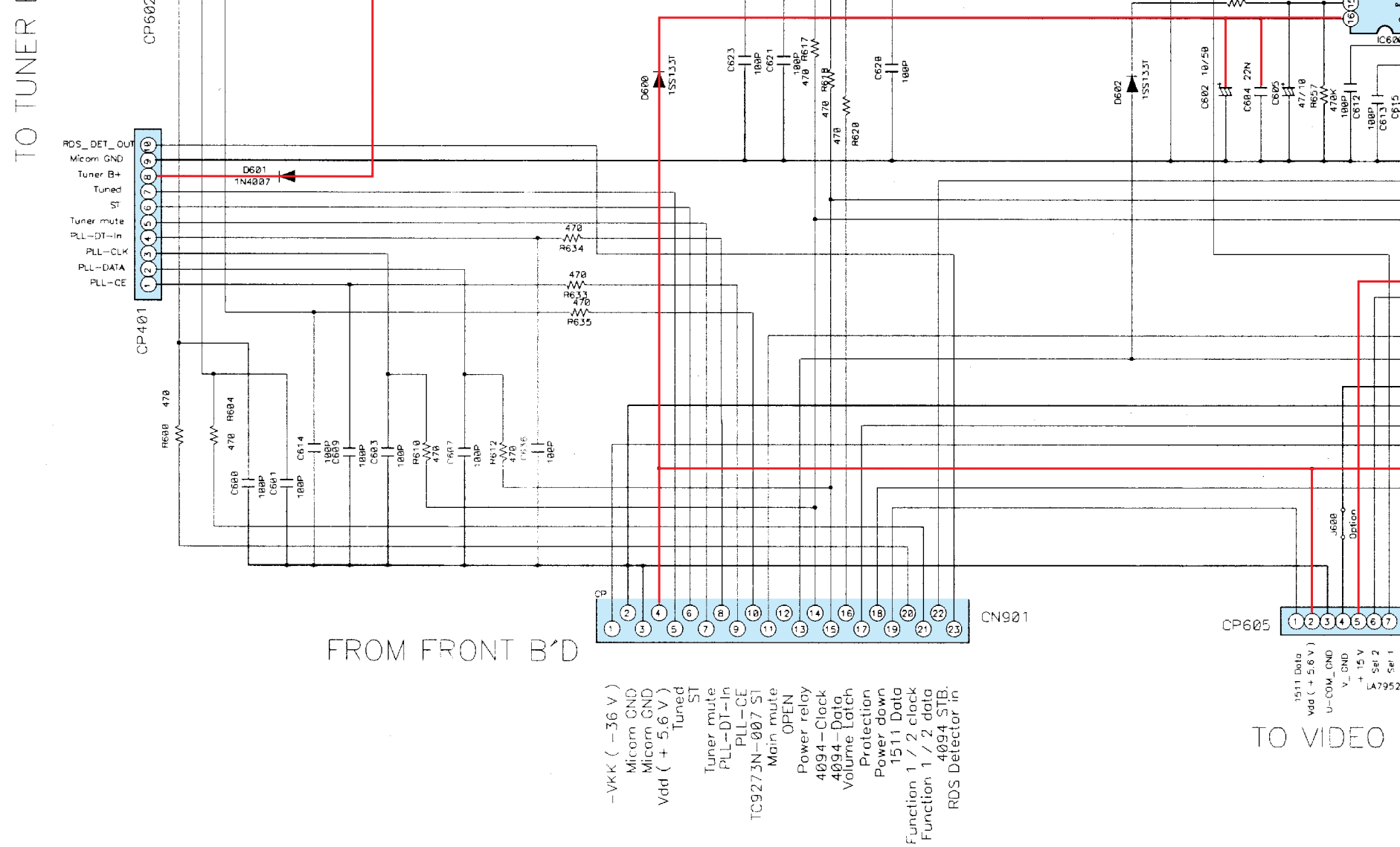


## NOTICE

ALL RESISTANCE VALUES IN OHM. k=1,000 OHM M=1,000,000 OHM
ALL CAPACITANCE VALUES IN MICRO FARAD. P=MICRO-MICRO FARAD
EACH VOLTAGE AND CURRENT ARE MEASUERD AT MO SIGNAL INPUT CONDITION.
CIRCUIT AND PARTS ARE SUBJECT TO CHANGE WITHOUT PRIOR NOTICE.

## WARNING:

Parts marked with this symbol ⚠ ha
Use ONLY replacement parts recommen

## CAUTION:

Before returning the unit to the custome
leakage current check or (2) a line to ch
current exceeds 0.5 milliamps, or if the
of the power card is less than 460kohms

## WARNING:

DO NOT return the unit to the customer
corrected.

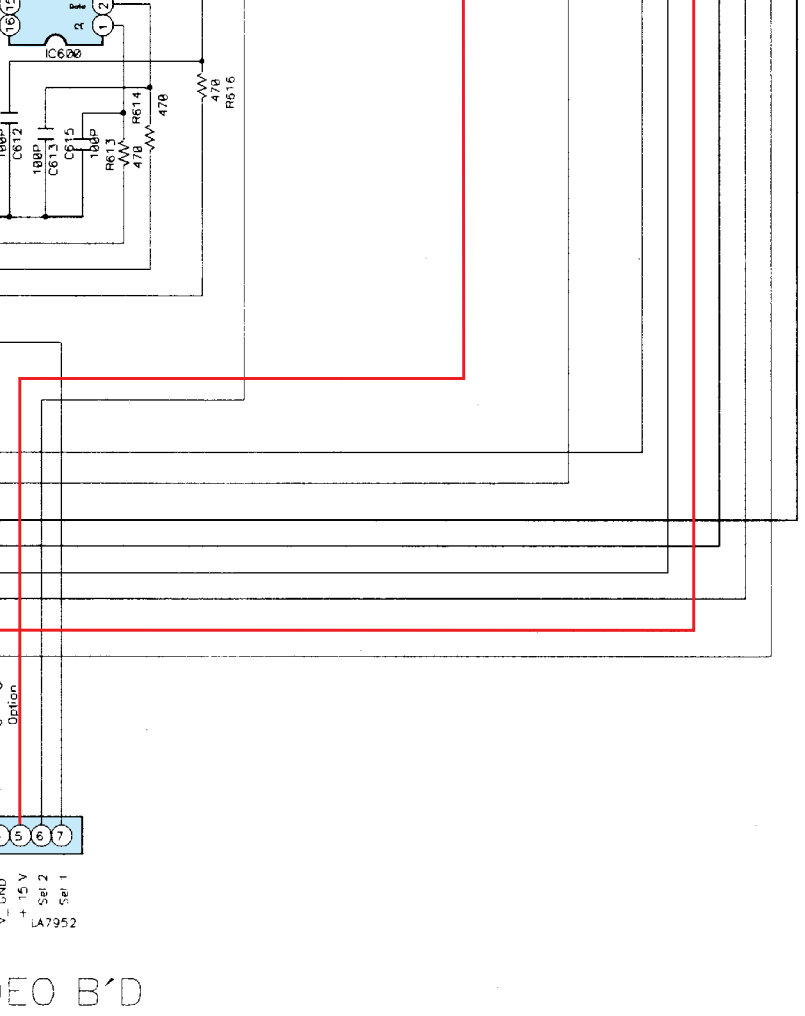


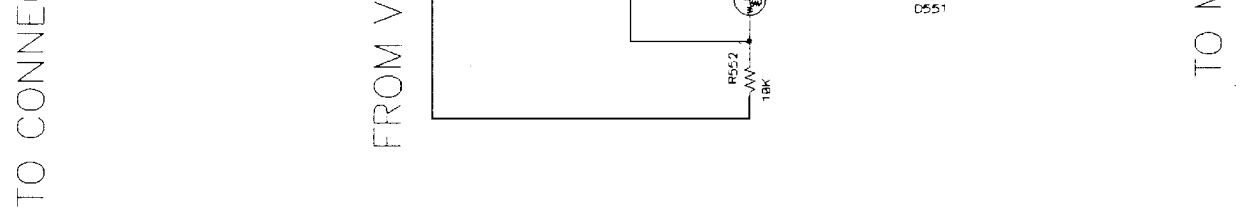


+ B LINE

– B LINE

SIGNAL LINE

have critical characteristics.
commended by the manufacture.

customer, make sure you make either (1) a
ne to chassis resistance check. If the leakage
or if the resistance from chassis to either side
60kohms, the unit is defective.

ustomer until the problem is located and

## SCHEMATIC DIAGRAMS(2/5)

VOLUME UNIT

CONNECTOR UNIT

E

F

G

H

## SCHEMATIC DIAGRAMS(3/5)

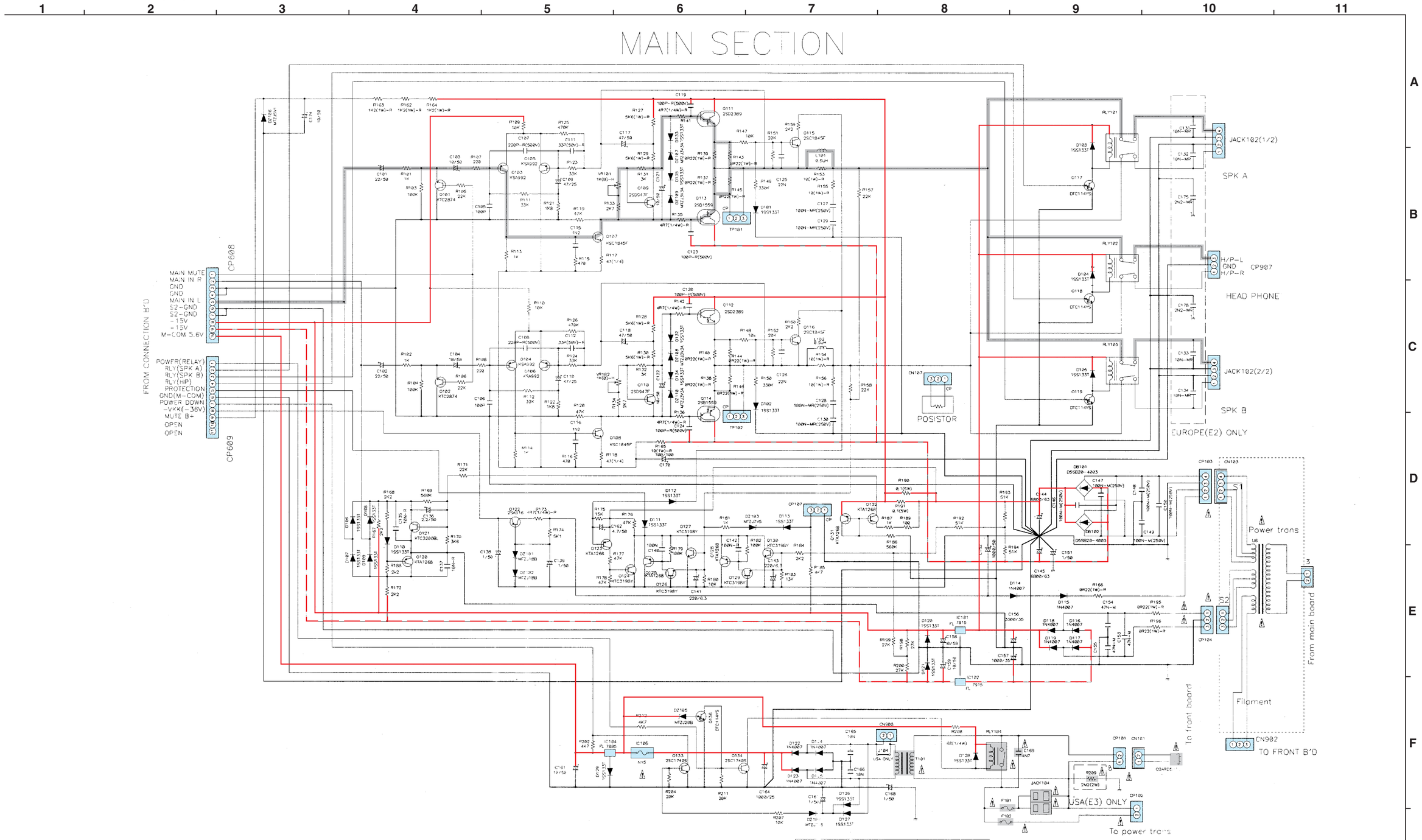


| | F101 | F102 |
|---|---|---|
| USA(E3) | 8A/125V | 6.3A/125V |
| EUROPE(E2) | 2.5A/250V | 3.15A/250V |

+B LINE
−B LINE
SIGNAL LINE

NOTICE
ALL RESISTANCE VALUES IN OHM. k=1,000 OHM M=1,000,000 OHM
ALL CAPACITANCE VALUES IN MICRO FARAD. P=MICRO-MICRO FARAD
EACH VOLTAGE AND CURRENT ARE MEASUERD AT MO SIGNAL INPUT CONDITION.
CIRCUIT AND PARTS ARE SUBJECT TO CHANGE WITHOUT PRIOR NOTICE.

WARNING:
Parts marked with this symbol ⚠ have critical characteristics.
Use ONLY replacement parts recommended by the manufacture.

CAUTION:
Before returning the unit to the customer, make sure you make either (1) a leakage current check or (2) a line to chassis resistance check. If the leakage current exceeds 0.5 milliamps, or if the resistance from chassis to either side of the power card is less than 460kohms, the unit is defective.

WARNING:
DO NOT return the unit to the customer until the problem is located and corrected.

SCHEMATIC DIAGRAMS(3/5)
MAIN UNIT

## SCHEMATIC DIAGRAMS(3/5)

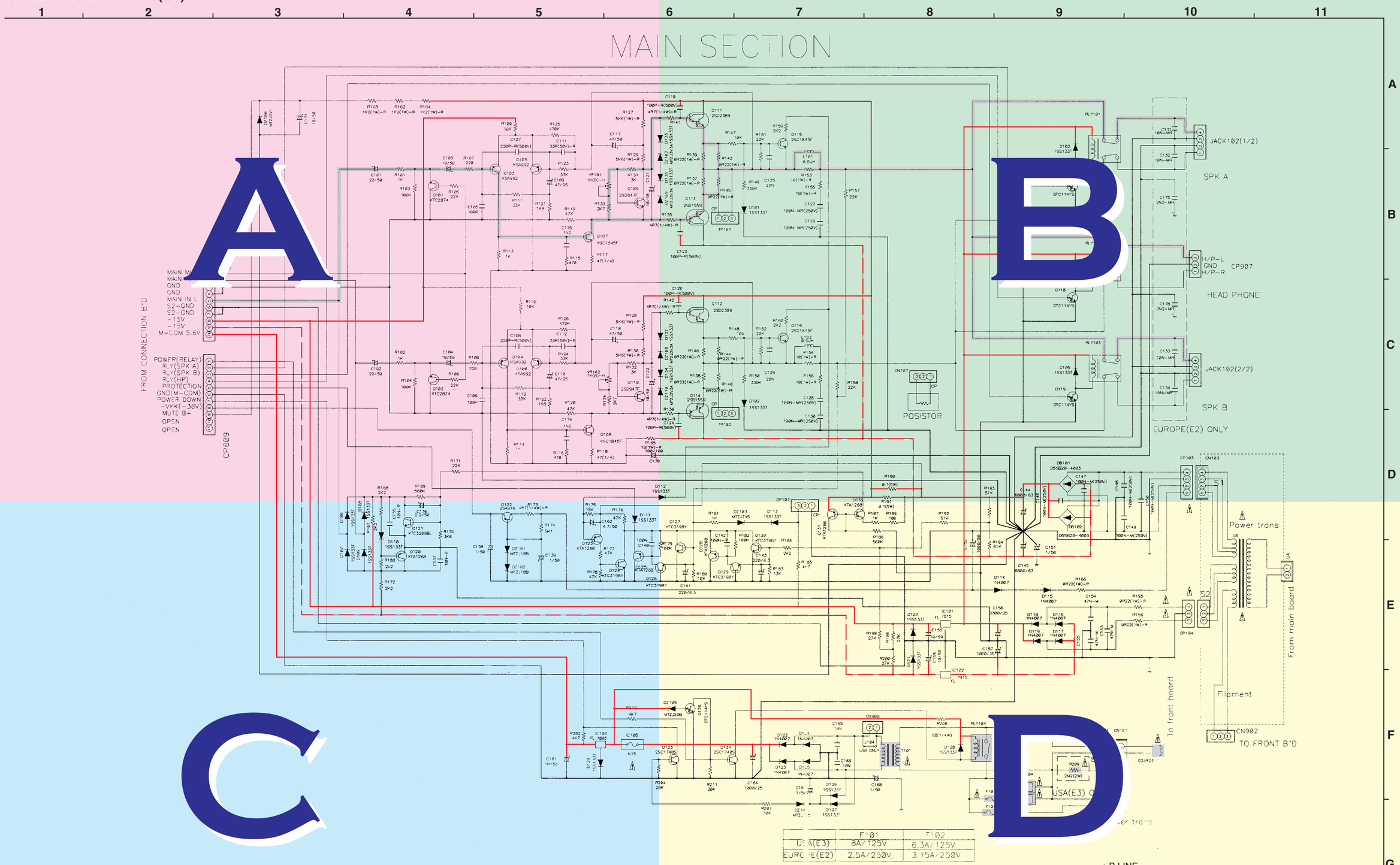


| | F101 | F102 |
|---|---|---|
| USA(E3) | 8A/125V | 6.3A/125V |
| EUROPE(E2) | 2.5A/250V | 3.15A/250V |

NOTICE
ALL RESISTANCE VALUES IN OHM. k=1,000 OHM M=1,000,000 OHM
ALL CAPACITANCE VALUES IN MICRO FARAD. P=MICRO-MICRO FARAD
EACH VOLTAGE AND CURRENT ARE MEASUERD AT MO SIGNAL INPUT CONDITION.
CIRCUIT AND PARTS ARE SUBJECT TO CHANGE WITHOUT PRIOR NOTICE.

WARNING:
Parts marked with this symbol ⚠ have critical characteristics.
Use ONLY replacement parts recommended by the manufacture.

CAUTION:
Before returning the unit to the customer, make sure you make either (1) a leakage current check or (2) a line to chassis resistance check. If the leakage current exceeds 0.5 milliamps, or if the resistance from chassis to either side of the power card is less than 460kohms, the unit is defective.

WARNING:
DO NOT return the unit to the customer until the problem is located and corrected.

SCHEMATIC DIAGRAMS(3/5)
MAIN UNIT

## SCHEMATIC DIAGRAMS(3/5)

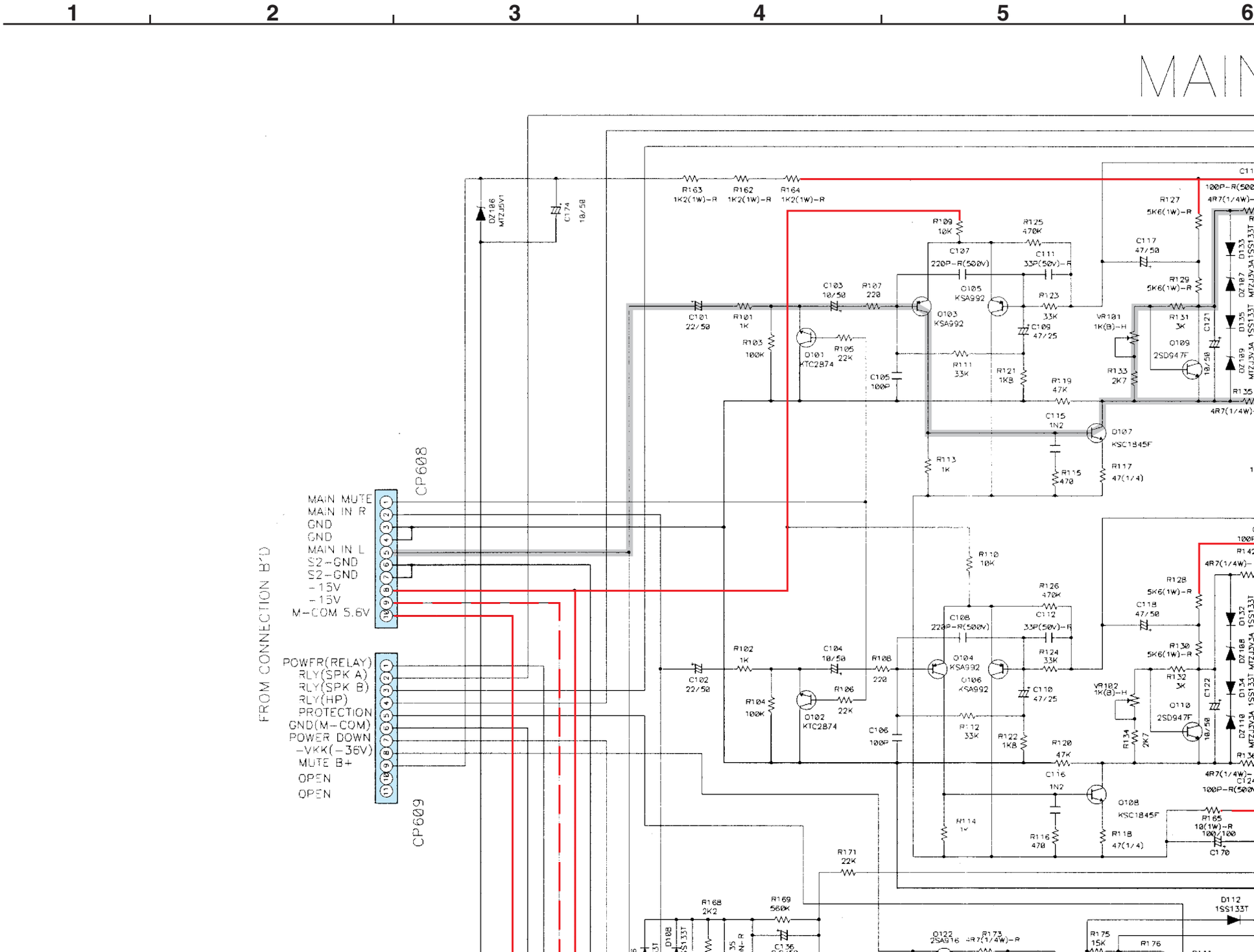

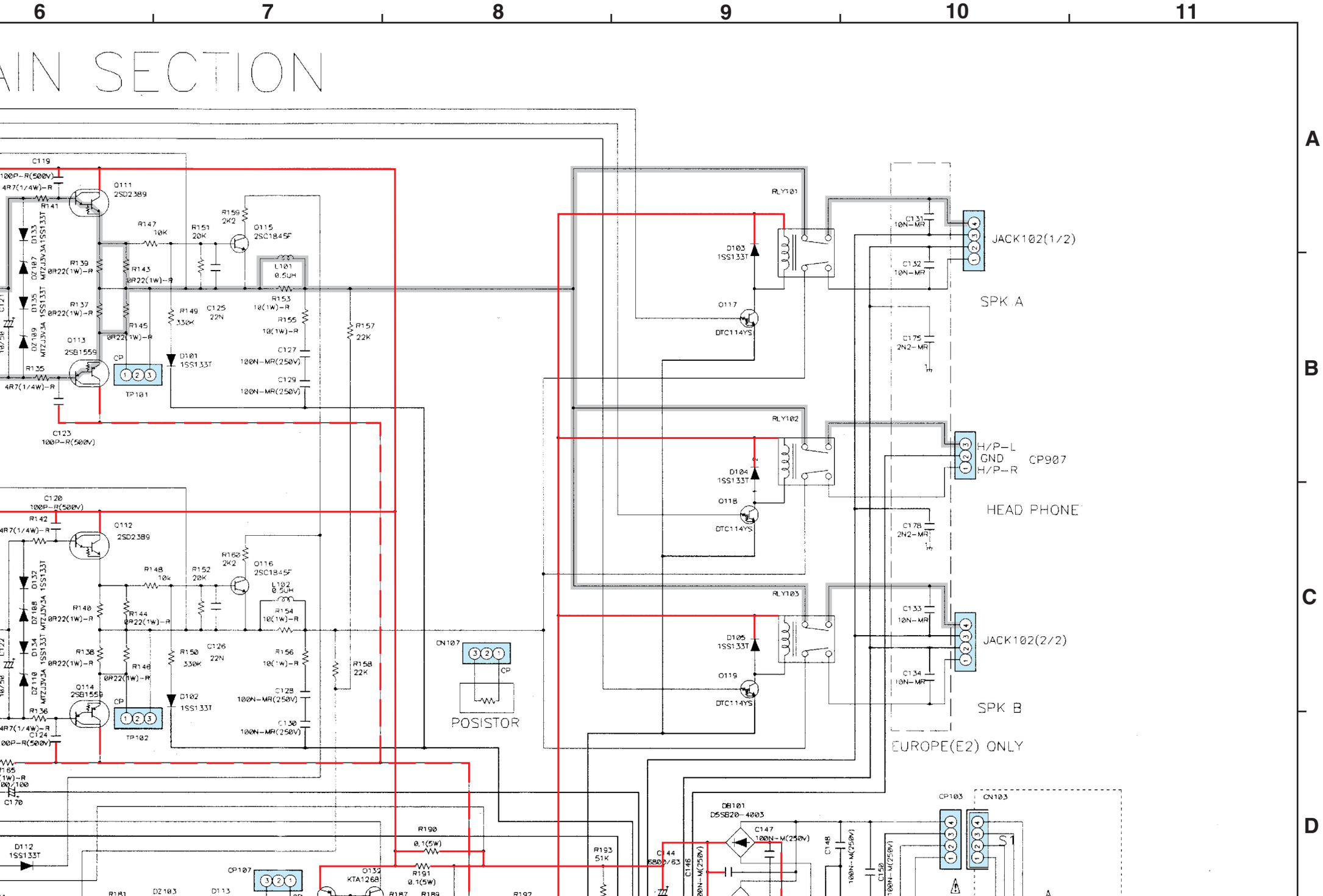
6
7
8
9
10
11
A
B
C
D
AIN SECTION
Q111
2SD2389
Q112
2SD2389
Q113
2SB1559
Q114
2SB1559
Q115
2SC1845F
Q116
2SC1845F
TP101
TP102
POSISTOR
RLY101
RLY102
RLY103
JACK102(1/2)
JACK102(2/2)
SPK A
SPK B
CP907
H/P-L
GND
H/P-R
HEAD PHONE
EUROPE(E2) ONLY
DB101
D5SB20-4003
CP103
CN103
CN107
Q132
KTA1268
CP107

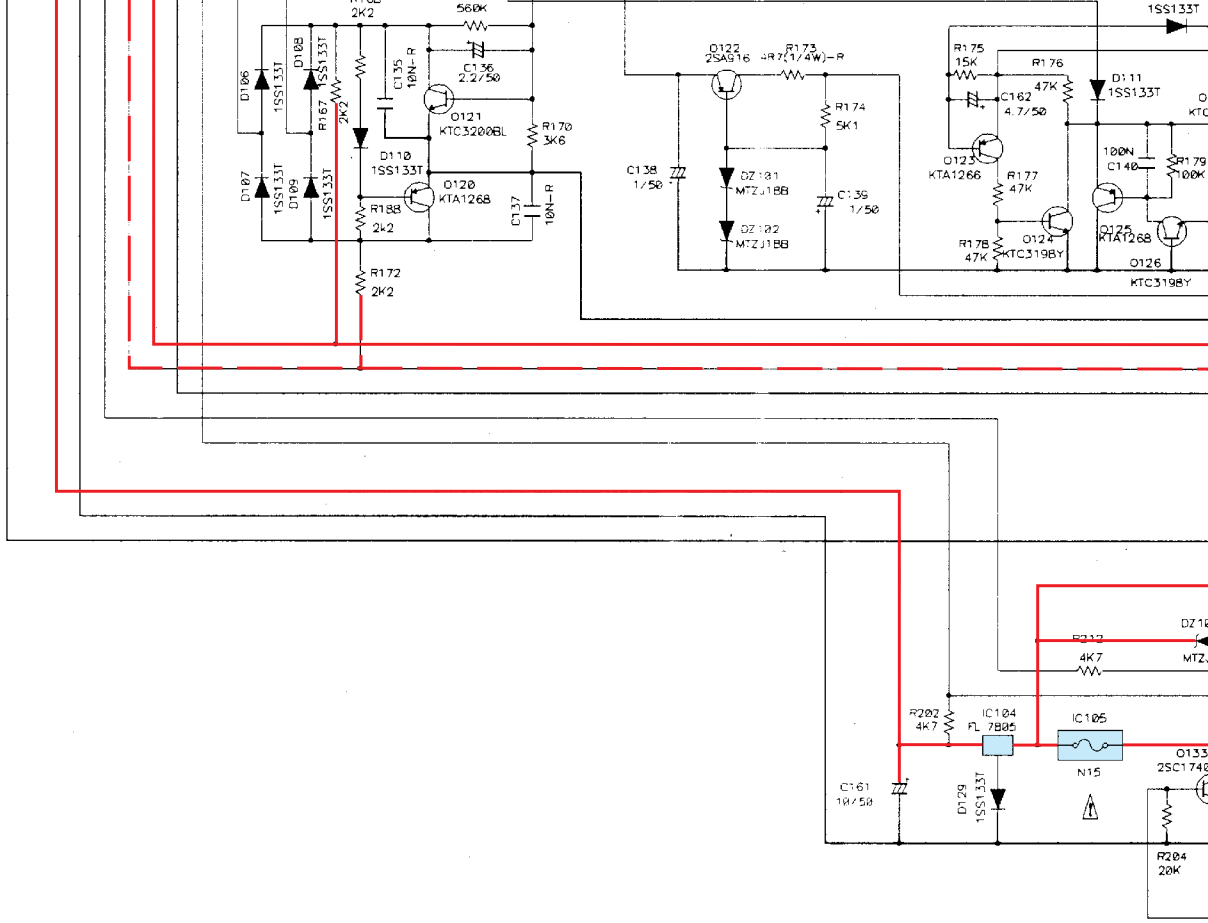


## NOTICE

ALL RESISTANCE VALUES IN OHM. k=1,000 OHM M=1,000,000 OHM
ALL CAPACITANCE VALUES IN MICRO FARAD. P=MICRO-MICRO FARAD
EACH VOLTAGE AND CURRENT ARE MEASUERD AT MO SIGNAL INPUT CONDITION.
CIRCUIT AND PARTS ARE SUBJECT TO CHANGE WITHOUT PRIOR NOTICE.

## WARNING:

Parts marked with this symbol ⚠ ▭ have
Use ONLY replacement parts recommende

## CAUTION:

Before returning the unit to the customer, m
leakage current check or (2) a line to chass
current exceeds 0.5 milliamps, or if the resi
of the power card is less than 460kohms, th

## WARNING:

DO NOT return the unit to the customer un
corrected.

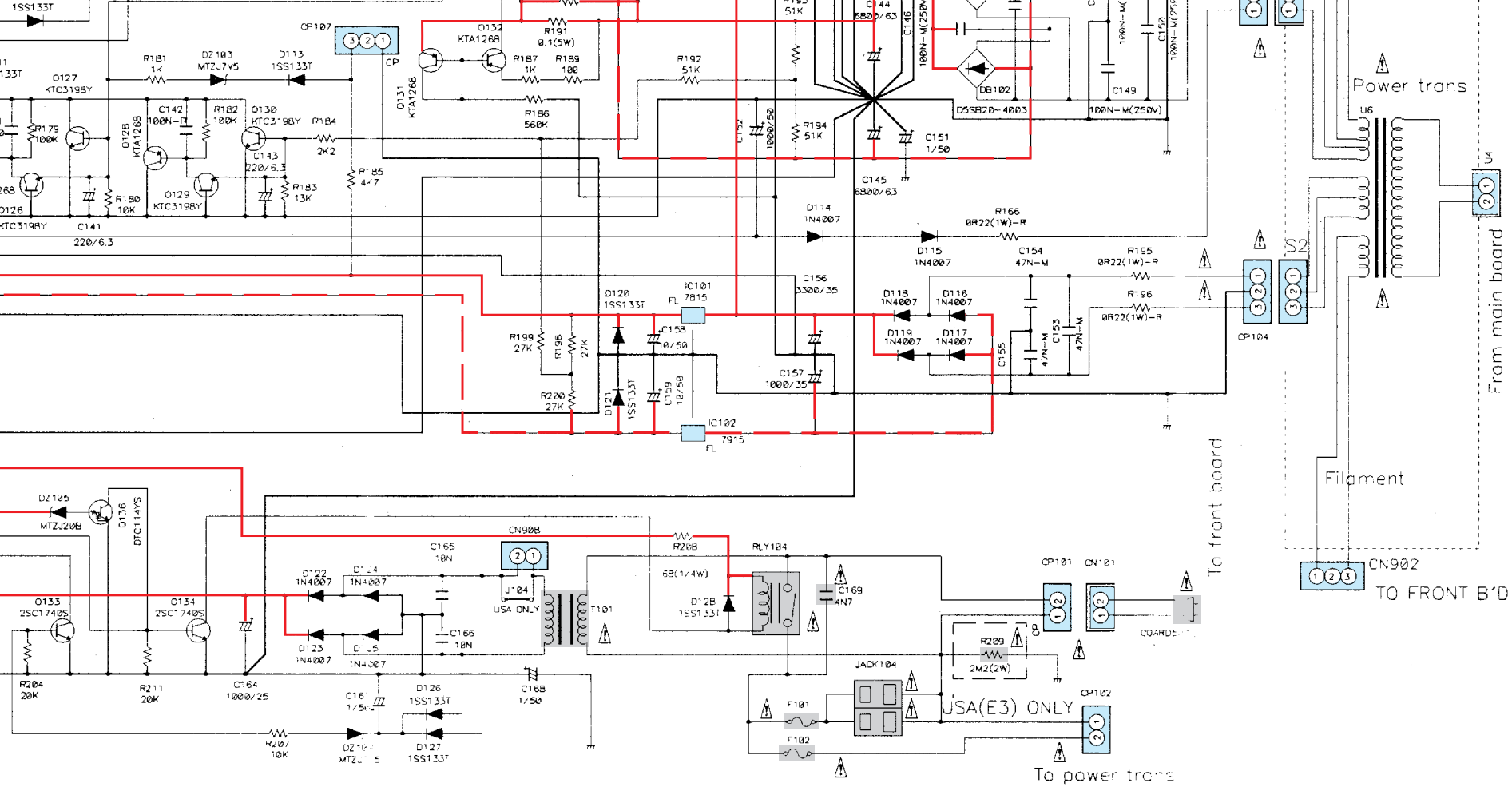


| | F101 | F102 |
|---|---|---|
| USA(E3) | 8A/125V | 6.3A/125V |
| EUROPE(E2) | 2.5A/250V | 3.15A/250V |

+B LINE

–B LINE

SIGNAL LINE

have critical characteristics.
mmended by the manufacture.

tomer, make sure you make either (1) a
to chassis resistance check. If the leakage
the resistance from chassis to either side
kohms, the unit is defective.

omer until the problem is located and

# SCHEMATIC DIAGRAMS(3/5)
## MAIN UNIT

E

F

G

H

## SCHEMATIC DIAGRAMS(4/5)

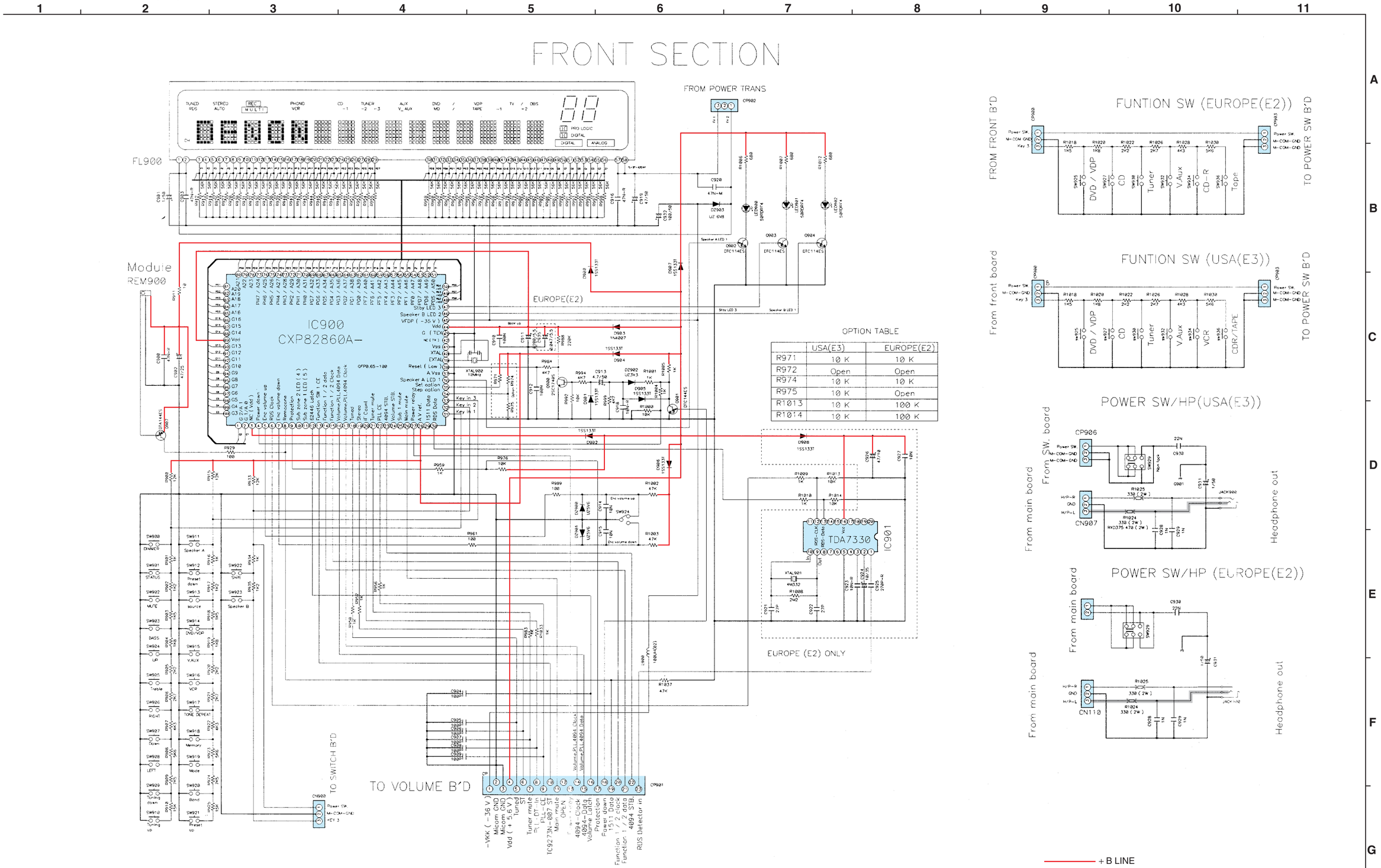


| | USA(E3) | EUROPE(E2) |
|---|---|---|
| R971 | 10 K | 10 K |
| R972 | Open | Open |
| R974 | 10 K | 10 K |
| R975 | 10 K | Open |
| R1013 | 10 K | 100 K |
| R1014 | 10 K | 100 K |

NOTICE
ALL RESISTANCE VALUES IN OHM. k=1,000 OHM M=1,000,000 OHM
ALL CAPACITANCE VALUES IN MICRO FARAD. P=MICRO-MICRO FARAD
EACH VOLTAGE AND CURRENT ARE MEASUERD AT MO SIGNAL INPUT CONDITION.
CIRCUIT AND PARTS ARE SUBJECT TO CHANGE WITHOUT PRIOR NOTICE.

WARNING:
Parts marked with this symbol ⚠ ▭ have critical characteristics.
Use ONLY replacement parts recommended by the manufacture.

CAUTION:
Before returning the unit to the customer, make sure you make either (1) a leakage current check or (2) a line to chassis resistance check. If the leakage current exceeds 0.5 milliamps, or if the resistance from chassis to either side of the power card is less than 460kohms, the unit is defective.

WARNING:
DO NOT return the unit to the customer until the problem is located and corrected.

SCHEMATIC DIAGRAMS(4/5)
FRONT UNIT
SWITCH UNIT
POWER SW/HP UNIT

## SCHEMATIC DIAGRAMS(4/5)

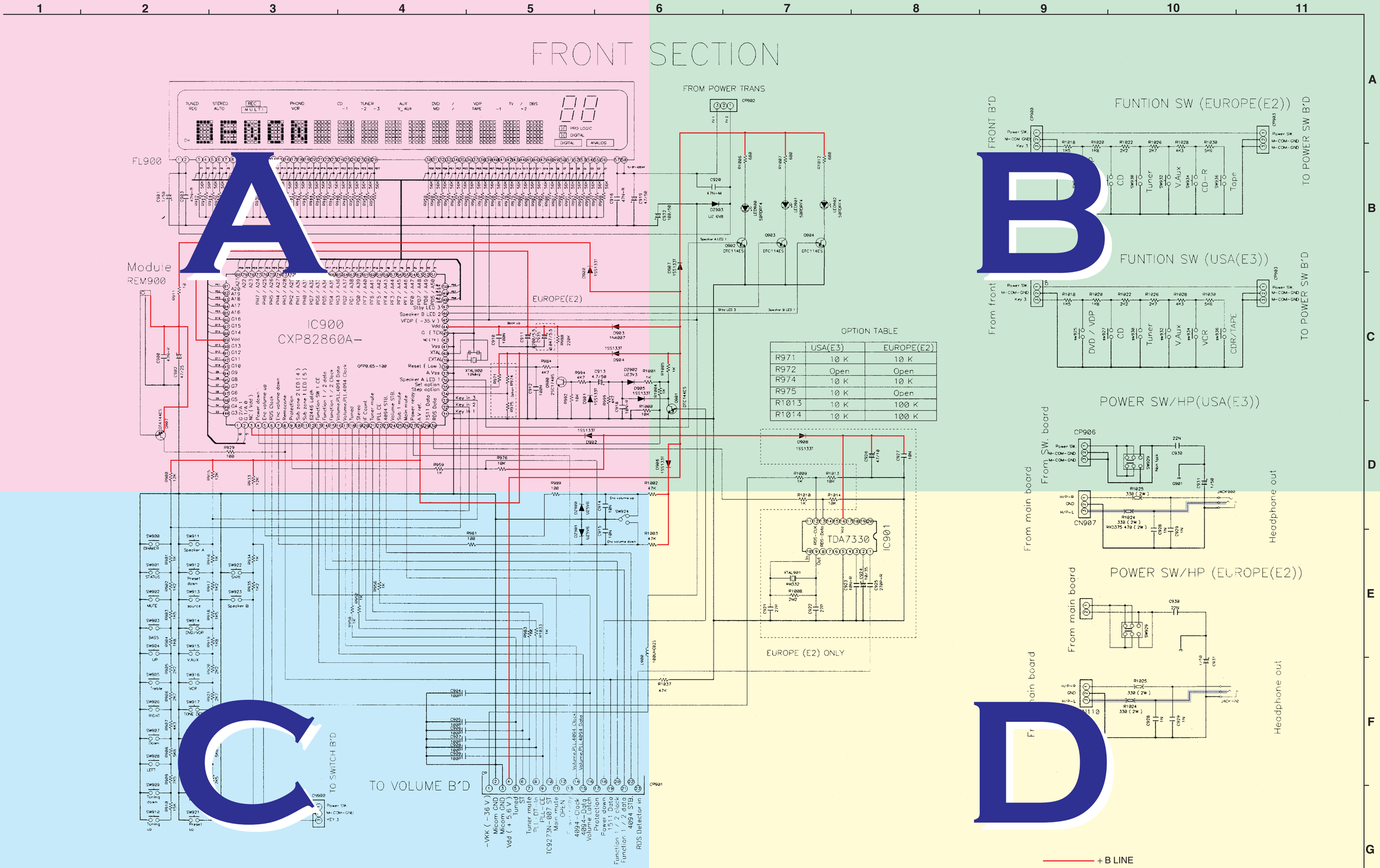


| | USA(E3) | EUROPE(E2) |
|---|---|---|
| R971 | 10 K | 10 K |
| R972 | Open | Open |
| R974 | 10 K | 10 K |
| R975 | 10 K | Open |
| R1013 | 10 K | 100 K |
| R1014 | 10 K | 100 K |

NOTICE
ALL RESISTANCE VALUES IN OHM. k=1,000 OHM M=1,000,000 OHM
ALL CAPACITANCE VALUES IN MICRO FARAD. P=MICRO-MICRO FARAD
EACH VOLTAGE AND CURRENT ARE MEASUERD AT MO SIGNAL INPUT CONDITION.
CIRCUIT AND PARTS ARE SUBJECT TO CHANGE WITHOUT PRIOR NOTICE.

WARNING:
Parts marked with this symbol ⚠ ▭ have critical characteristics.
Use ONLY replacement parts recommended by the manufacture.

CAUTION:
Before returning the unit to the customer, make sure you make either (1) a leakage current check or (2) a line to chassis resistance check. If the leakage current exceeds 0.5 milliamps, or if the resistance from chassis to either side of the power card is less than 460kohms, the unit is defective.

WARNING:
DO NOT return the unit to the customer until the problem is located and corrected.

SCHEMATIC DIAGRAMS(4/5)
FRONT UNIT
SWITCH UNIT
POWER SW/HP UNIT

## SCHEMATIC DIAGRAMS(4/5)

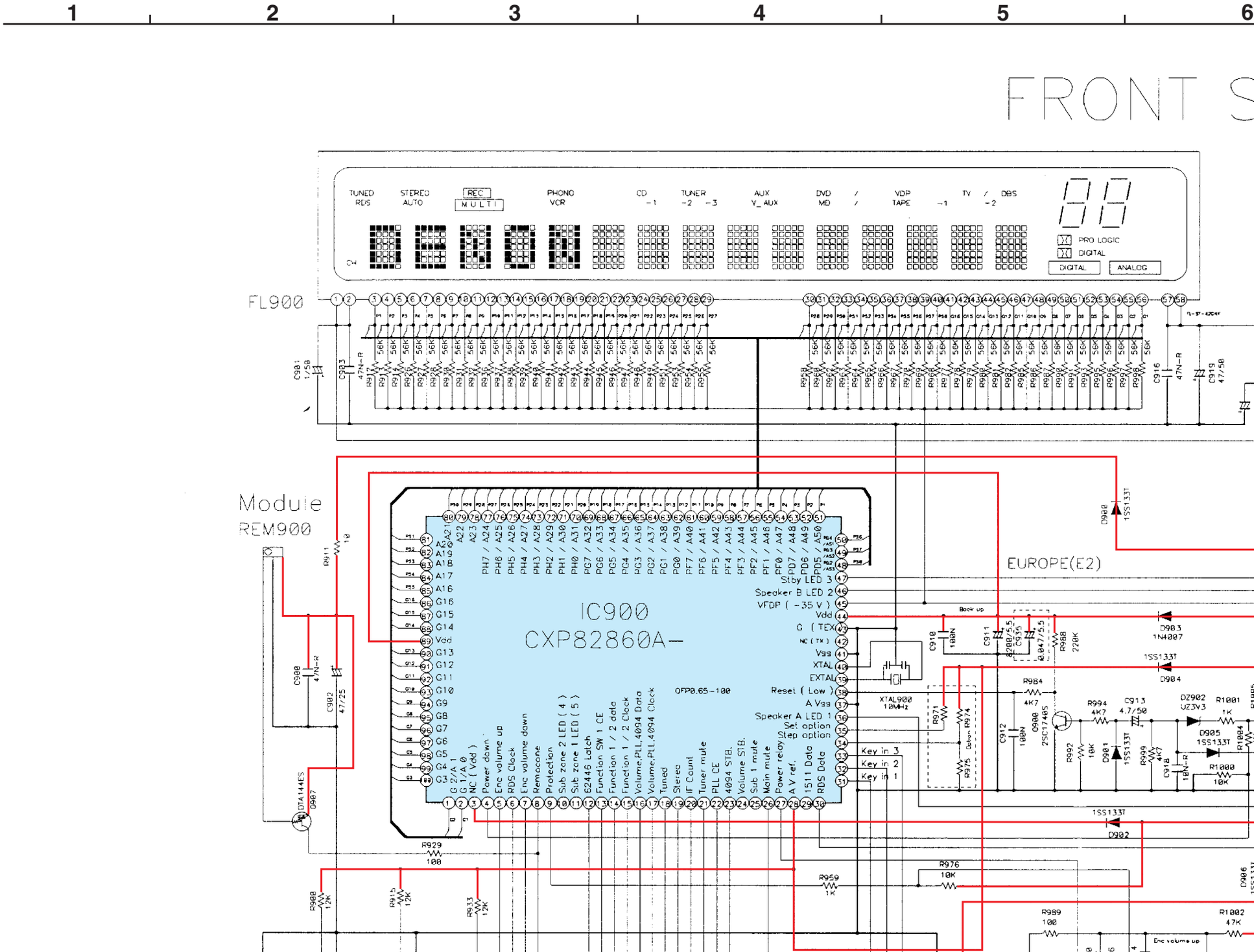

6 7 8 9 10 11

# SECTION

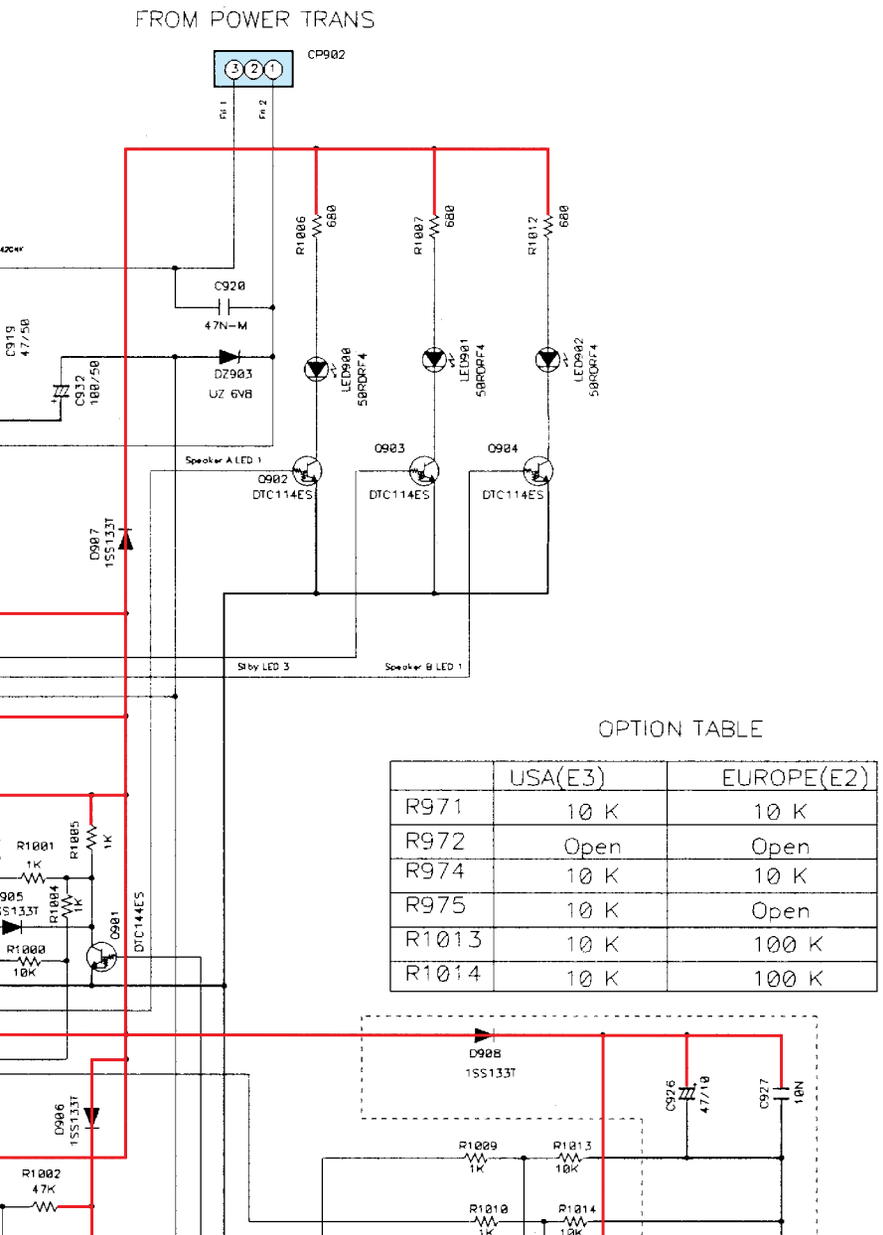


OPTION TABLE

| | USA(E3) | EUROPE(E2) |
|---|---|---|
| R971 | 10 K | 10 K |
| R972 | Open | Open |
| R974 | 10 K | 10 K |
| R975 | 10 K | Open |
| R1013 | 10 K | 100 K |
| R1014 | 10 K | 100 K |

## FUNTION SW (EUROPE(E2))

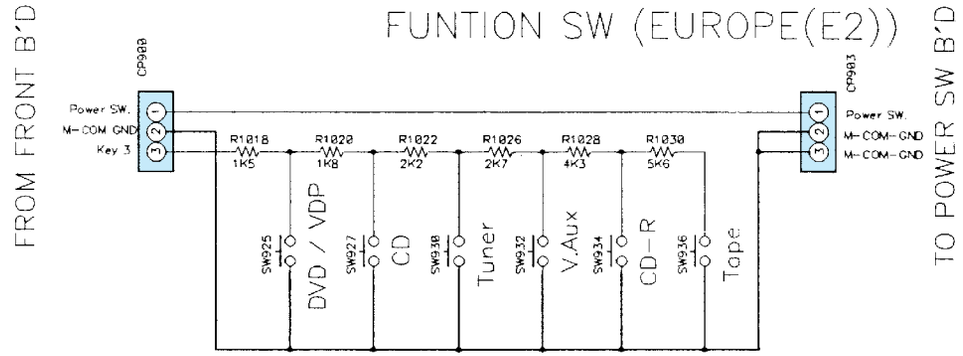


## FUNTION SW (USA(E3))

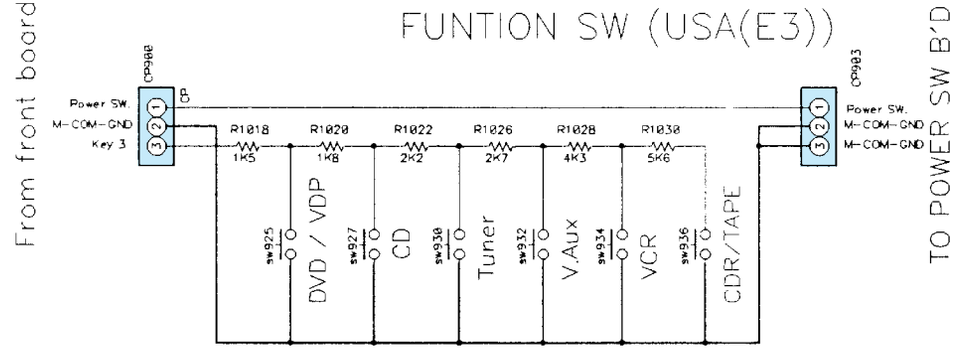


## POWER SW/HP(USA(E3))

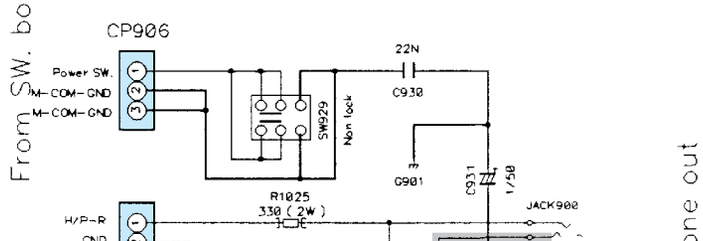


A B C D

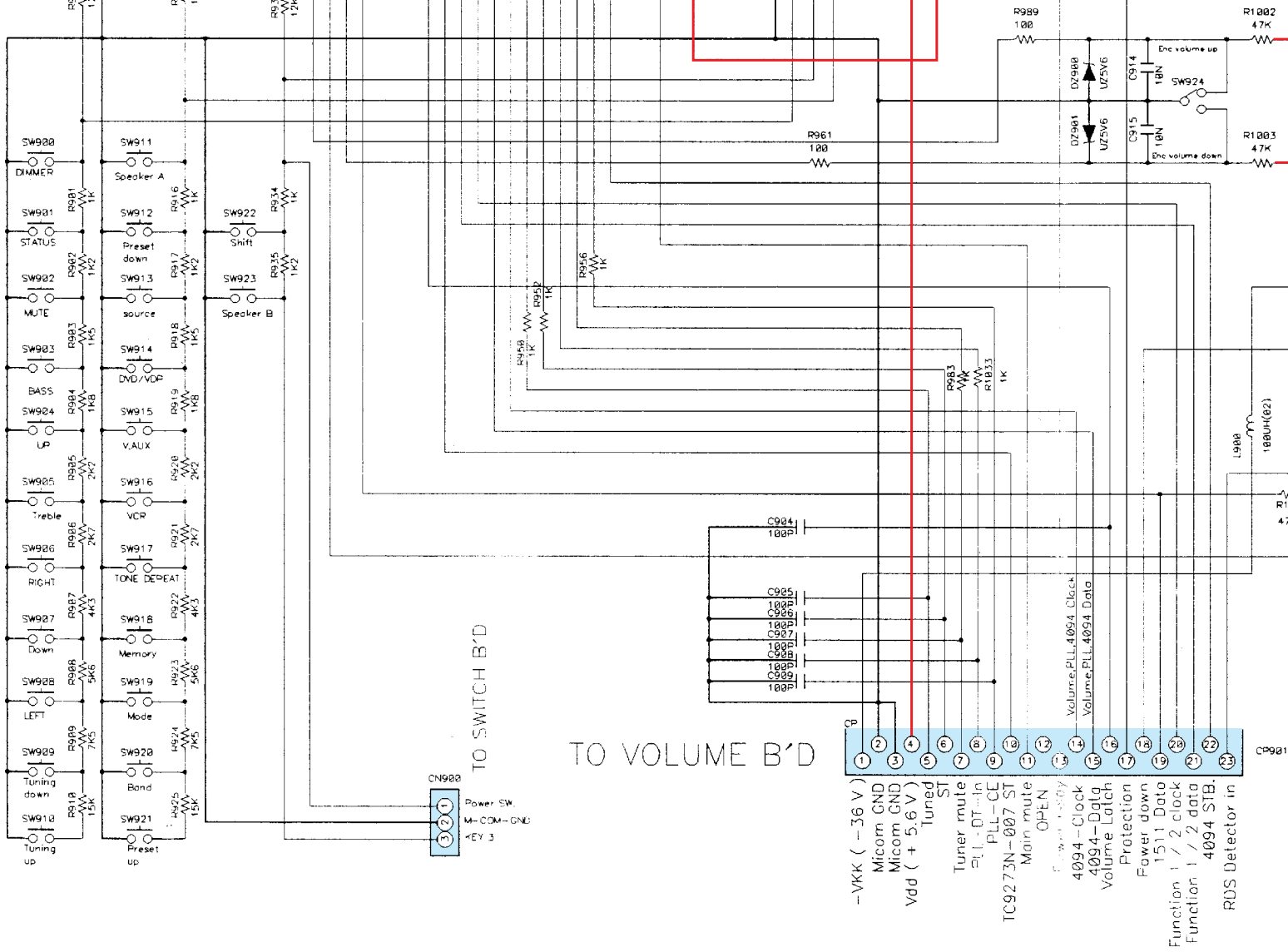


## NOTICE

ALL RESISTANCE VALUES IN OHM. k=1,000 OHM M=1,000,000 OHM
ALL CAPACITANCE VALUES IN MICRO FARAD. P=MICRO-MICRO FARAD
EACH VOLTAGE AND CURRENT ARE MEASUERD AT MO SIGNAL INPUT CONDITION.
CIRCUIT AND PARTS ARE SUBJECT TO CHANGE WITHOUT PRIOR NOTICE.

## WARNING:

Parts marked with this symbol ⚠ ▭ ha
Use ONLY replacement parts recommer

## CAUTION:

Before returning the unit to the custome
leakage current check or (2) a line to ch
current exceeds 0.5 milliamps, or if the r
of the power card is less than 460kohms

## WARNING:

DO NOT return the unit to the customer
corrected.

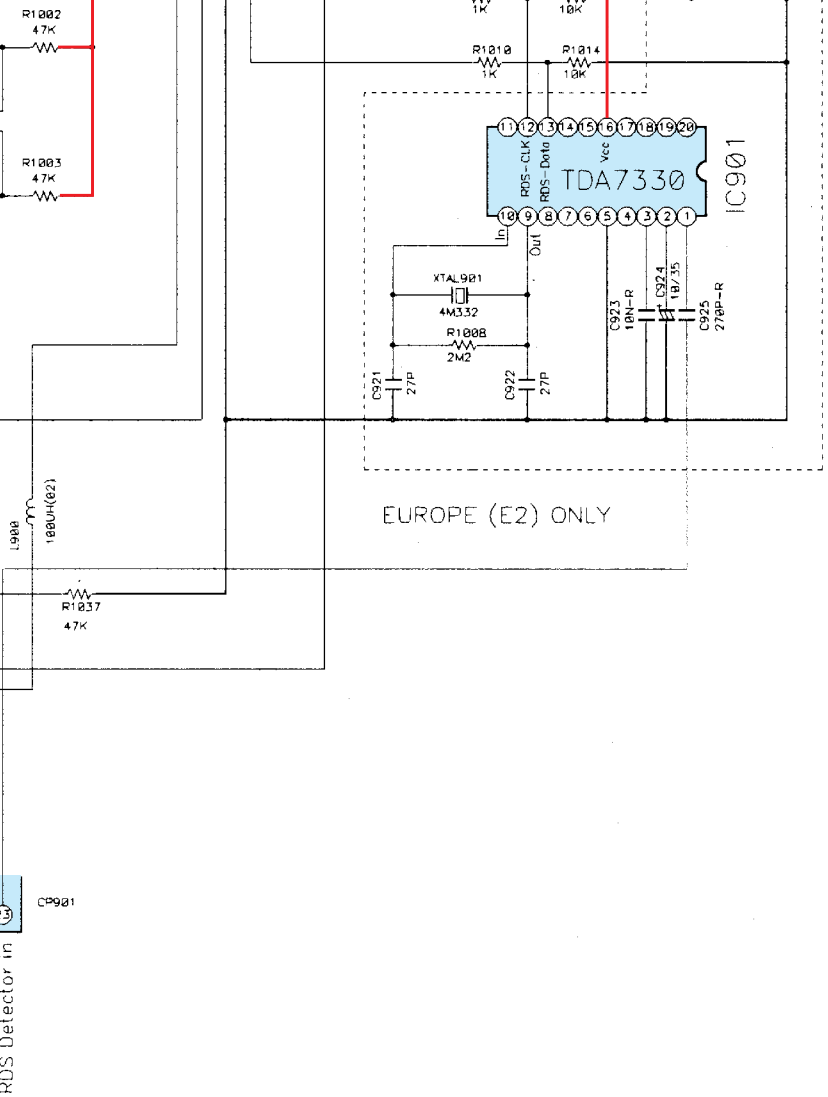


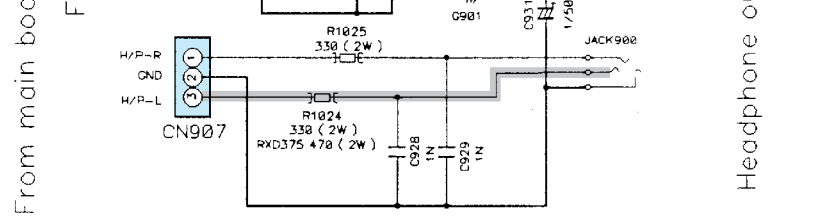


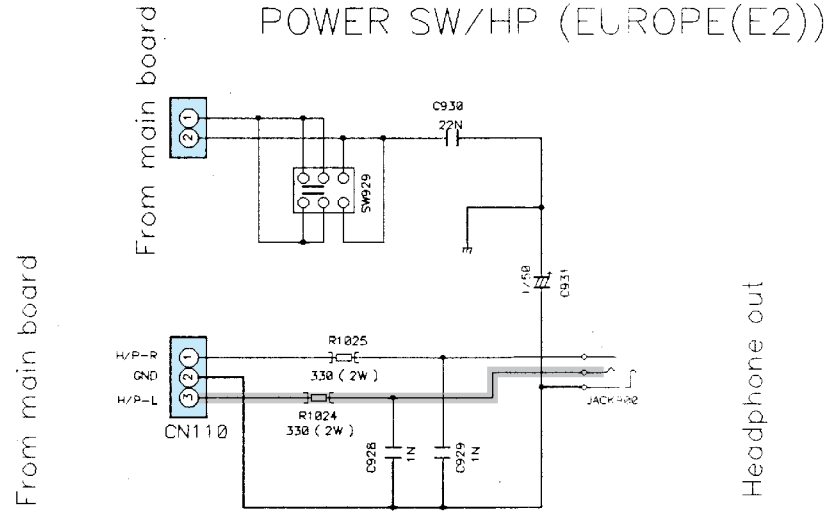


+B LINE

SIGNAL LINE

have critical characteristics.
commended by the manufacture.

customer, make sure you make either (1) a
ne to chassis resistance check. If the leakage
or if the resistance from chassis to either side
60kohms, the unit is defective.

ustomer until the problem is located and

## SCHEMATIC DIAGRAMS(4/5)

FRONT UNIT
SWITCH UNIT
POWER SW/HP UNIT

E
F
G
H

## SCHEMATIC DIAGRAMS(5/5)

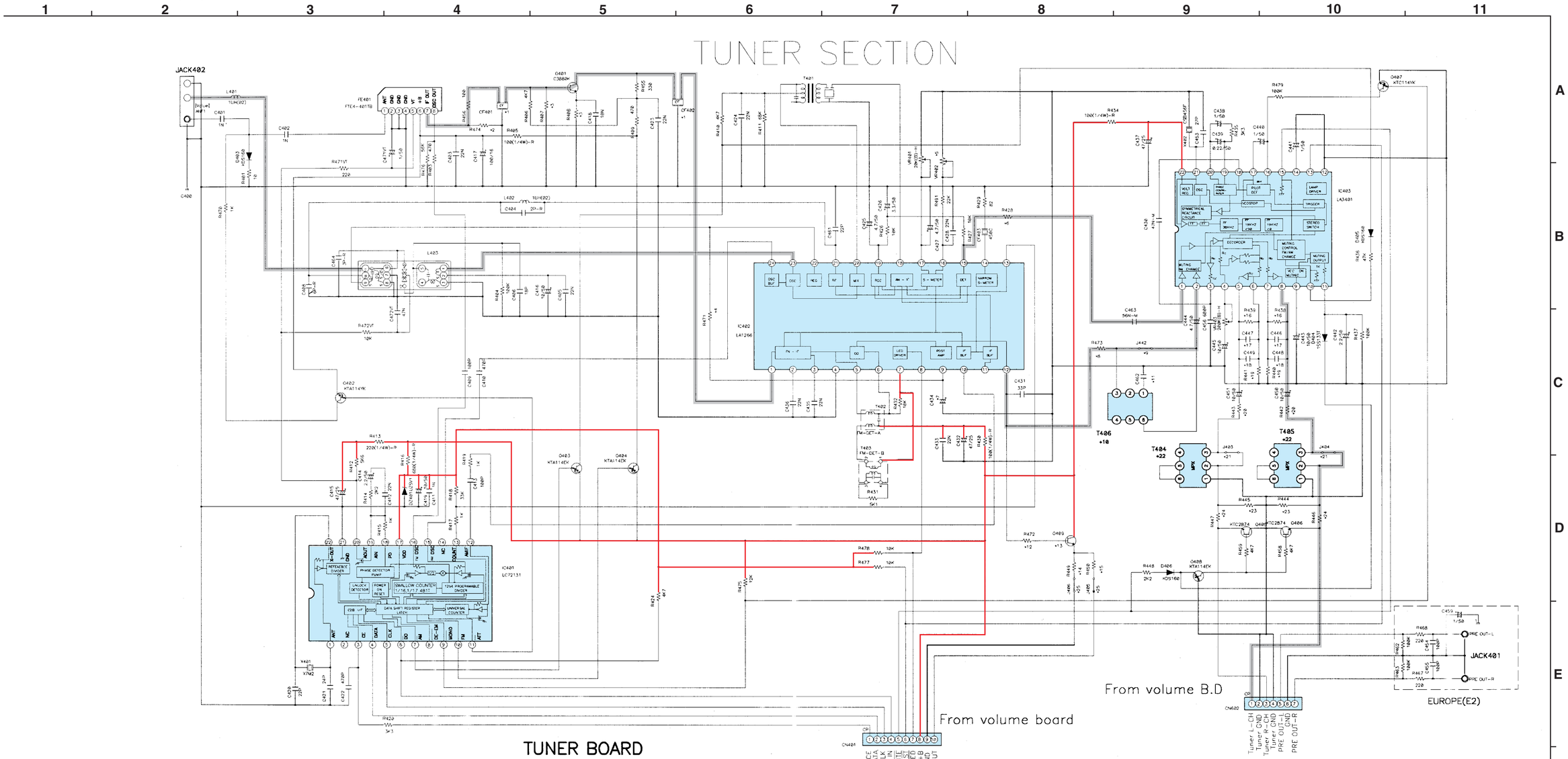


## TUNER BOARD

| | R-NO. | USA(E3) | EUROPE(E2) |
|---|---|---|---|
| *1 | CF401/CF402 | SFE10.7MA8 | SFE10.7MS3 |
| *2 | R474 | – | 180 |
| *3 | R407/R408 | 470/1.2K | 680/680 |
| *4 | R471 | 18K | 39K |
| *5 | VR402 | 50K(B)-H | 100K(B)-H |
| *6 | R428 | 3.3K | 10K |
| *7 | C434 | 1/50 | 0.33/50 |
| *8 | R473 | 0 | 2.4K |

| | R-NO. | USA(E3) | EUROPE(E2) |
|---|---|---|---|
| *9 | J442 | JUMPER | – |
| *10 | T406 | – | ANTI-BIRDIE |
| *11 | C452 | – | 470P |
| *12 | R472 | – | 100 |
| *13 | Q409 | – | C3880S |
| *14 | R449 | – | 3.9K |
| *15 | R450 | – | 1K |
| *16 | R438,R439 | 100K | 150K |

| | R-NO. | USA(E3) | EUROPE(E2) |
|---|---|---|---|
| *17 | C446,C447 | 270P | 330P |
| *18 | C448,C449 | 470P | – |
| *19 | R440,R441 | 120K | 220K |
| *20 | R442,R443 | 3.3K | 2.2K |
| *21 | J403,J404 | JUMPER | – |
| *22 | T404,T405 | – | LPF(MPX) |
| *23 | R444,R445 | 8.2K | 3.3K |
| *24 | R446,R447 | JUMPER | 470 |
| *25 | J405,406 | – | JUMPER |

+B LINE
SIGNAL LINE

NOTICE
ALL RESISTANCE VALUES IN OHM. k=1,000 OHM M=1,000,000 OHM
ALL CAPACITANCE VALUES IN MICRO FARAD. P=MICRO-MICRO FARAD
EACH VOLTAGE AND CURRENT ARE MEASUERD AT MO SIGNAL INPUT CONDITION.
CIRCUIT AND PARTS ARE SUBJECT TO CHANGE WITHOUT PRIOR NOTICE.

WARNING:
Parts marked with this symbol ⚠ ▒ have critical characteristics.
Use ONLY replacement parts recommended by the manufacture.

CAUTION:
Before returning the unit to the customer, make sure you make either (1) a leakage current check or (2) a line to chassis resistance check. If the leakage current exceeds 0.5 milliamps, or if the resistance from chassis to either side of the power card is less than 460kohms, the unit is defective.

WARNING:
DO NOT return the unit to the customer until the problem is located and corrected.

SCHEMATIC DIAGRAMS(5/5)
TUNER UNIT

## SCHEMATIC DIAGRAMS(5/5)

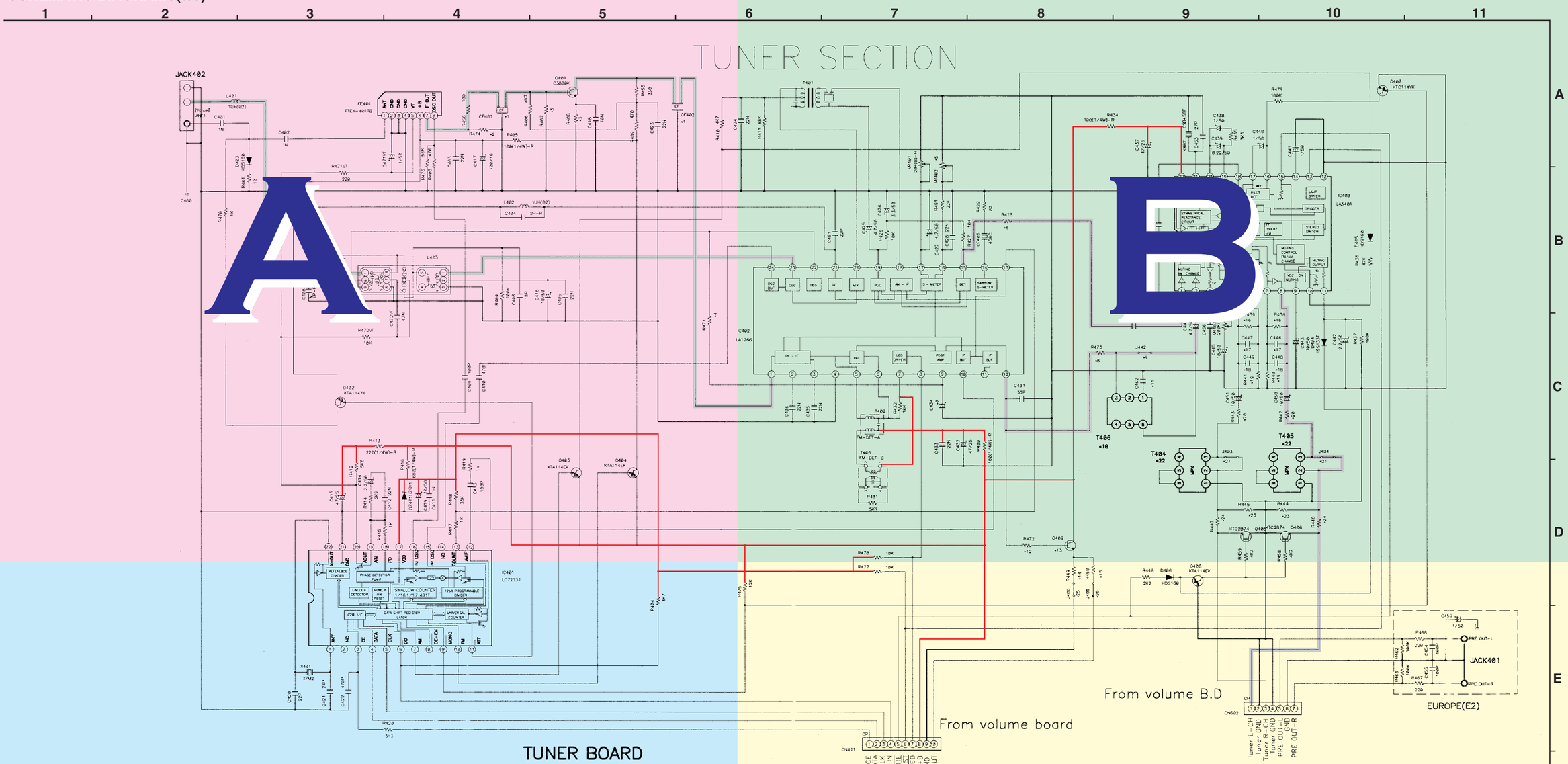


## TUNER BOARD

| | R-NO. | USA(E3) | EUROPE(E2) |
|---|---|---|---|
| *1 | CF401/CF402 | SFE10.7MA8 | SFE10.7MS3 |
| *2 | [illegible] | [illegible] | 180 |
| *3 | [illegible]R408 | [illegible] | 680/680 |
| [illegible] | R471 | 18[illegible] | 39K |
| [illegible] | VR402 | 50K(B)-H | 100K(B)-H |
| [illegible] | R428 | 3.3K | 10K |
| *7 | C434 | [illegible] | 0.33/50 |
| *8 | [illegible] | [illegible] | 2.4K |

| | R-NO. | USA(E3) | EUROPE(E2) |
|---|---|---|---|
| *9 | J442 | JUMPER | – |
| *10 | T406 | – | ANTI-BIRDIE |
| *11 | C452 | – | 470P |
| *12 | R472 | – | 100 |
| *13 | Q409 | – | C3BB0S |
| *14 | R449 | – | 3.9K |
| *15 | R450 | – | 1K |
| *16 | R438,R439 | 100K | 150K |

| | R-NO. | USA(E3) | EUROPE(E2) |
|---|---|---|---|
| *17 | C446,C447 | 270P | 330P |
| *18 | C448,C449 | 470[illegible] | [illegible] |
| *19 | R440,R441 | 120[illegible] | 220K |
| *20 | R442,R443 | 3.3[illegible] | 2.2K |
| *21 | J403,J404 | JUMP[illegible] | – |
| *22 | T404,T405 | – | LPF(MPX) |
| *23 | R444,R445 | 8.2[illegible] | 3.3K |
| *24 | R446,R447 | JUMP[illegible] | [illegible] |
| *25 | J405,406 | – | [illegible] |

+B LINE

SIGNAL LINE

### NOTICE

ALL RESISTANCE VALUES IN OHM. k=1,000 OHM M=1,000,000 OHM
ALL CAPACITANCE VALUES IN MICRO FARAD. P=MICRO-MICRO FARAD
EACH VOLTAGE AND CURRENT ARE MEASUERD AT MO SIGNAL INPUT CONDITION.
CIRCUIT AND PARTS ARE SUBJECT TO CHANGE WITHOUT PRIOR NOTICE.

### WARNING:

Parts marked with this symbol ⚠ ▭ have critical characteristics.
Use ONLY replacement parts recommended by the manufacture.

### CAUTION:

Before returning the unit to the customer, make sure you make either (1) a leakage current check or (2) a line to chassis resistance check. If the leakage current exceeds 0.5 milliamps, or if the resistance from chassis to either side of the power card is less than 460kohms, the unit is defective.

### WARNING:

DO NOT return the unit to the customer until the problem is located and corrected.

## SCHEMATIC DIAGRAMS(5/5)
TUNER UNIT

# SCHEMATIC DIAGRAMS(5/5)

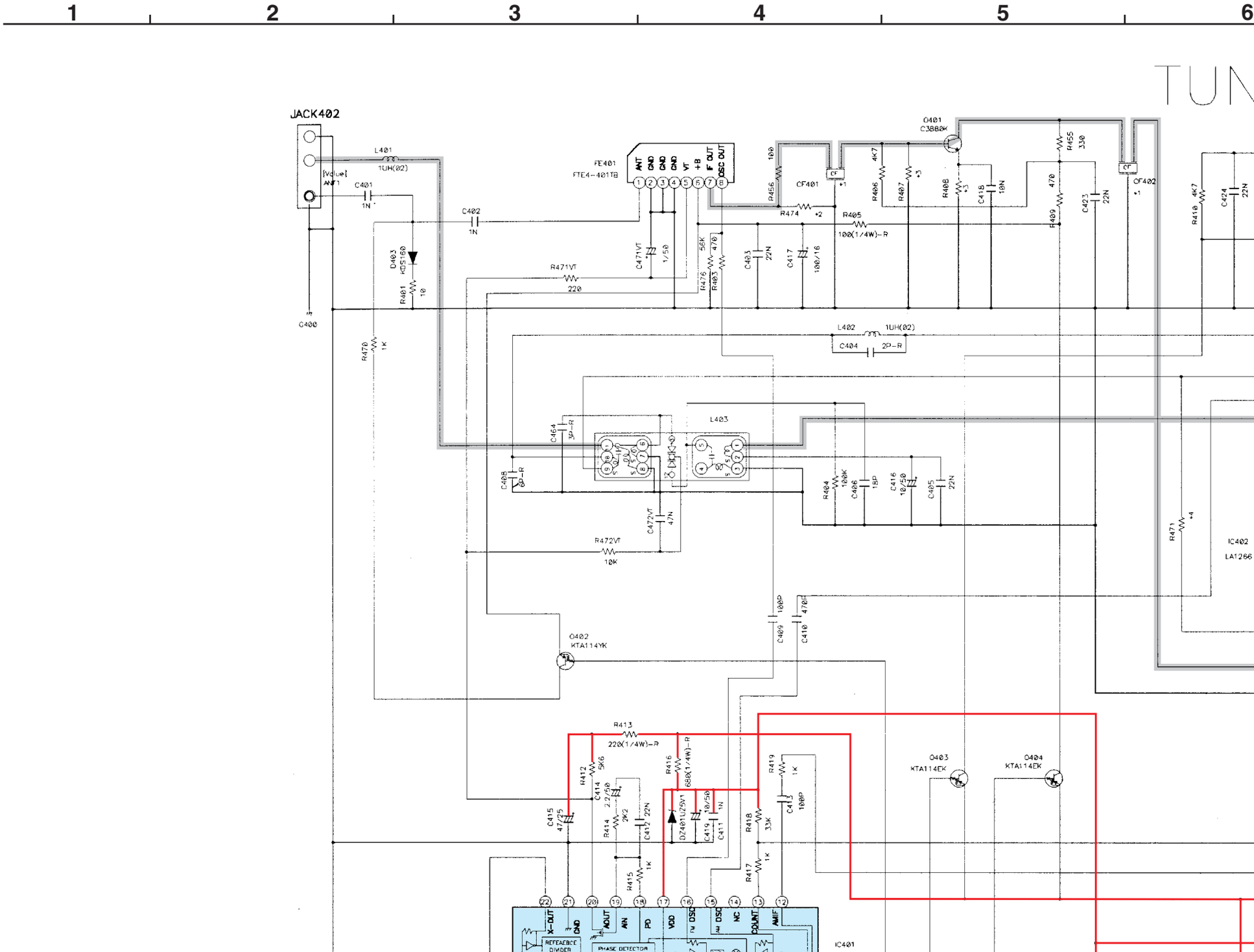

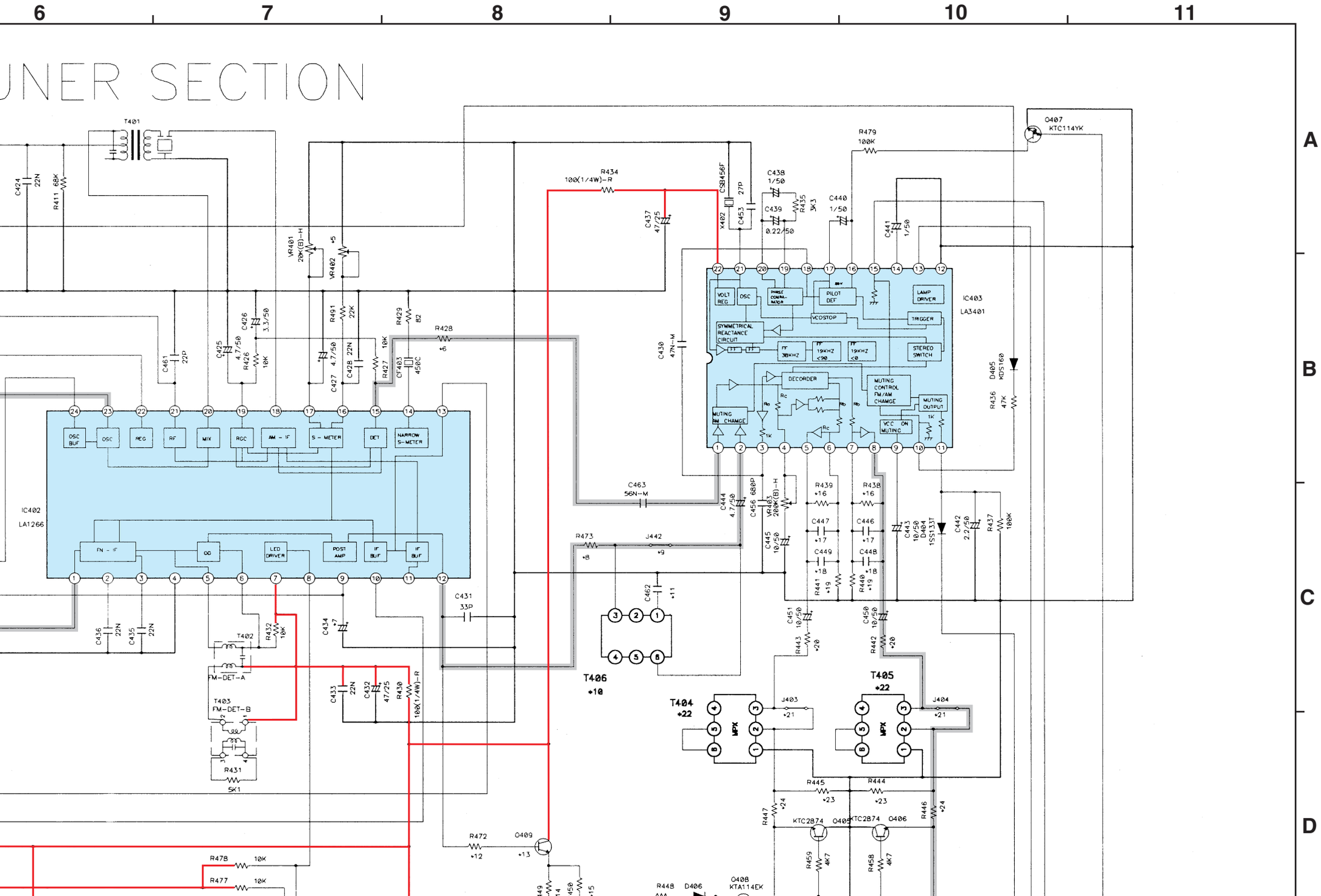
6
7
8
9
10
11
A
B
C
D
UNER SECTION
T401
C424 22N
R411 68K
VR401 20K(B)-H
VR402 *5
C461 22P
C425 4.7/50
C426 3.3/50
R426 10K
R491 22K
C427 4.7/50
C428 22N
R427 10K
R429 82
CF403 450C
R428 *6
IC402
LA1266
OSC BUF
OSC
REG
RF
MIX
AGC
AM - IF
S - METER
DET
NARROW S-METER
FM - IF
OD
LED DRIVER
POST AMP
IF BUF
IF BUF
C436 22N
C435 22N
T402
R432 10K
FM-DET-A
T403
FM-DET-B
R431 5K1
C433 22N
C432 47/25
R430 100(1/4W)-R
C434 *7
C431 33P
R434 100(1/4W)-R
C437 47/25
CSB456F
X402
C453 27P
C438 1/50
C439 0.22/50
R435 3K3
C440 1/50
C441 1/50
R479 100K
Q407 KTC114YK
IC403
LA3401
VOLT REG
OSC
PHASE COMPA-RATOR
PILOT DET
LAMP DRIVER
VCOSTOP
TRIGGER
SYMMETRICAL REACTANCE CIRCUIT
RF 38KHZ
19KHZ <90
19KHZ <0
STEREO SWITCH
DECORDER
MUTING CONTROL FM/AM CHANGE
MUTING OUTPUT
MUTING AM CHANGE
VCC ON MUTING
C430 47N-M
D405 KDS160
R436 47K
C463 56N-M
C444 4.7/50
C456 680P
VR403 200K(B)-H
R439 *16
R438 *16
C447 *17
C446 *17
C449 *18
C448 *18
R441 *19
R440 *19
C445 10/50
C443 10/50
D404 1SS133T
C442 2.2/50
R437 100K
R473 *8
J442 *9
C462 *11
T406 *10
C451 10/50
C450 10/50
R443 *20
R442 *20
T404 *22
T405 *22
MPX
J403 *21
J404 *21
R445 *23
R444 *23
R447 *24
R446 *24
KTC2874 Q405
KTC2874 Q406
R459 4K7
R458 4K7
R472 *12
Q409 *13
R478 10K
R477 10K
R448
D406
Q408 KTA114EK

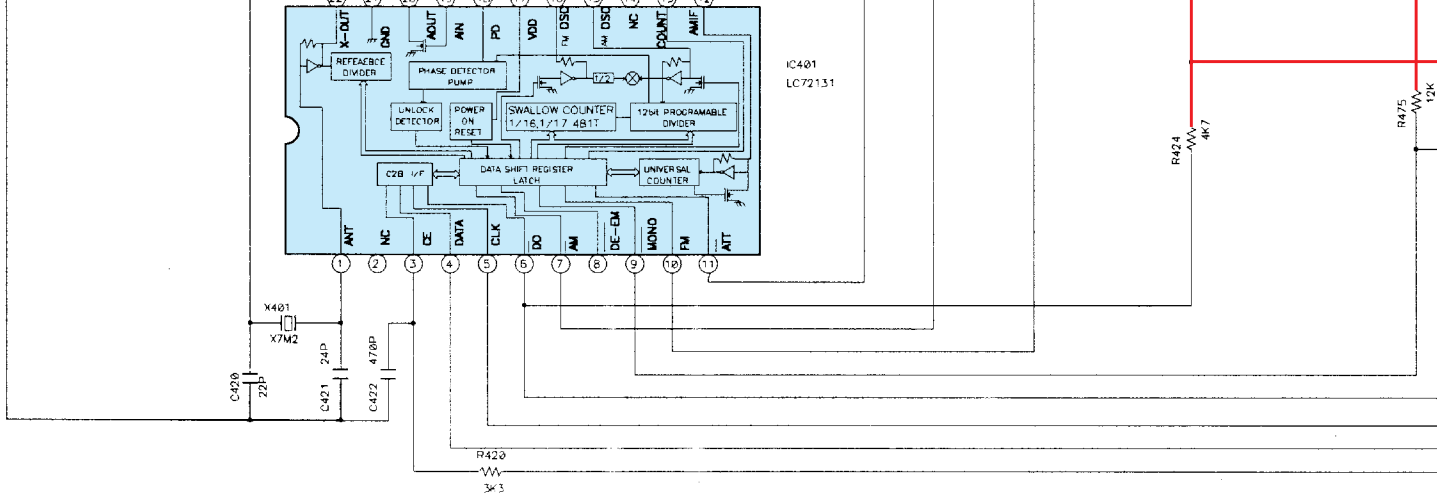


# TUNER BOARD

| | R-NO. | USA(E3) | EUROPE(E2) |
|---|---|---|---|
| *1 | CF401/CF402 | SFE10.7MA8 | SFE10.7MS3 |
| *2 | R474 | – | 180 |
| *3 | R407/R408 | 470/1.2K | 680/680 |
| *4 | R471 | 18K | 39K |
| *5 | VR402 | 50K(B)-H | 100K(B)-H |
| *6 | R428 | 3.3K | 10K |
| *7 | C434 | 1/50 | 0.33/50 |
| *8 | R473 | 0 | 2.4K |

| | R-NO. | USA(E3) | EUROPE |
|---|---|---|---|
| *9 | J442 | JUMPER | – |
| *10 | T406 | – | ANTI-BI |
| *11 | C462 | – | 470 |
| *12 | R472 | – | 100 |
| *13 | Q409 | – | C388 |
| *14 | R449 | – | 3.9K |
| *15 | R450 | – | 1K |
| *16 | R438,R439 | 100K | 150 |

## NOTICE

ALL RESISTANCE VALUES IN OHM. k=1,000 OHM M=1,000,000 OHM
ALL CAPACITANCE VALUES IN MICRO FARAD. P=MICRO-MICRO FARAD
EACH VOLTAGE AND CURRENT ARE MEASUERD AT MO SIGNAL INPUT CONDITION.
CIRCUIT AND PARTS ARE SUBJECT TO CHANGE WITHOUT PRIOR NOTICE.

## WARNING:

Parts marked with this symbol ⚠ hav
Use ONLY replacement parts recommend

## CAUTION:

Before returning the unit to the customer,
leakage current check or (2) a line to chas
current exceeds 0.5 milliamps, or if the res
of the power card is less than 460kohms,

## WARNING:

DO NOT return the unit to the customer u
corrected.

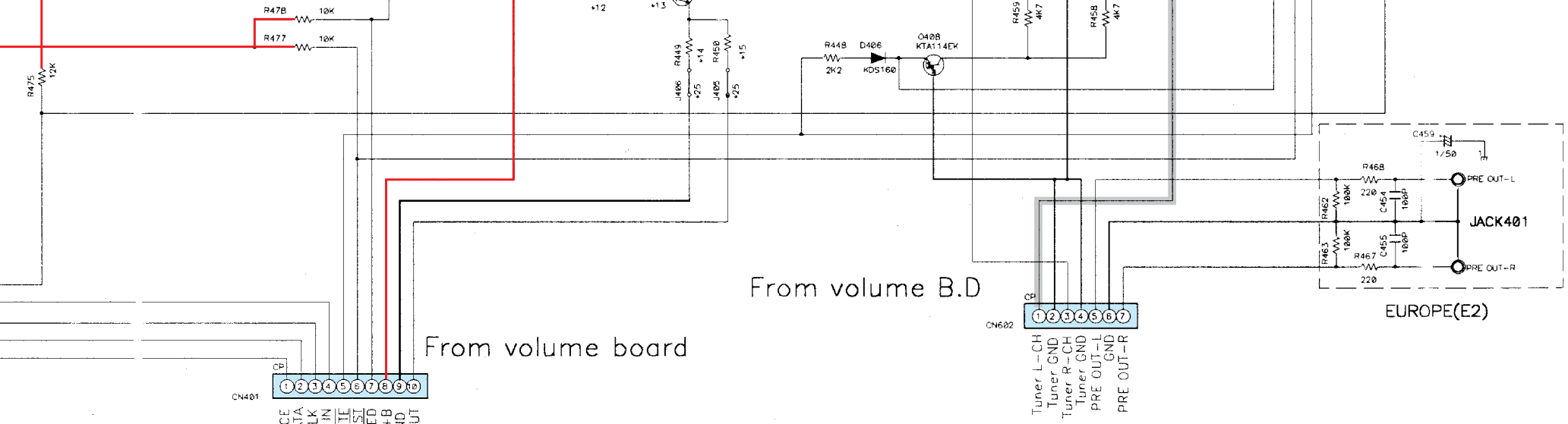


| EUROPE(E2) |
|---|
| – |
| ANTI-BIRDIE |
| 470P |
| 100 |
| C3880S |
| 3.9K |
| 1K |
| 150K |

| | R-NO. | USA(E3) | EUROPE(E2) |
|---|---|---|---|
| *17 | C446,C447 | 270P | 330P |
| *18 | C448,C449 | 470P | – |
| *19 | R440,R441 | 120K | 220K |
| *20 | R442,R443 | 3.3K | 2.2K |
| *21 | J403,J404 | JUMPER | – |
| *22 | T404,T405 | – | LPF(MPX) |
| *23 | R444,R445 | 8.2K | 3.3K |
| *24 | R446,R447 | JUMPER | 470 |
| *25 | J405,406 | – | JUMPER |

+B LINE

SIGNAL LINE

have critical characteristics.
ommended by the manufacture.

stomer, make sure you make either (1) a
e to chassis resistance check. If the leakage
if the resistance from chassis to either side
kohms, the unit is defective.

tomer until the problem is located and

## SCHEMATIC DIAGRAMS(5/5)
TUNER UNIT

E F G H