HITACHI

D-M1 MKII (U,C,W)
D-M2 MKII (FS,BS,AU,W)

SERVICE MANUAL

English **No. 1355**

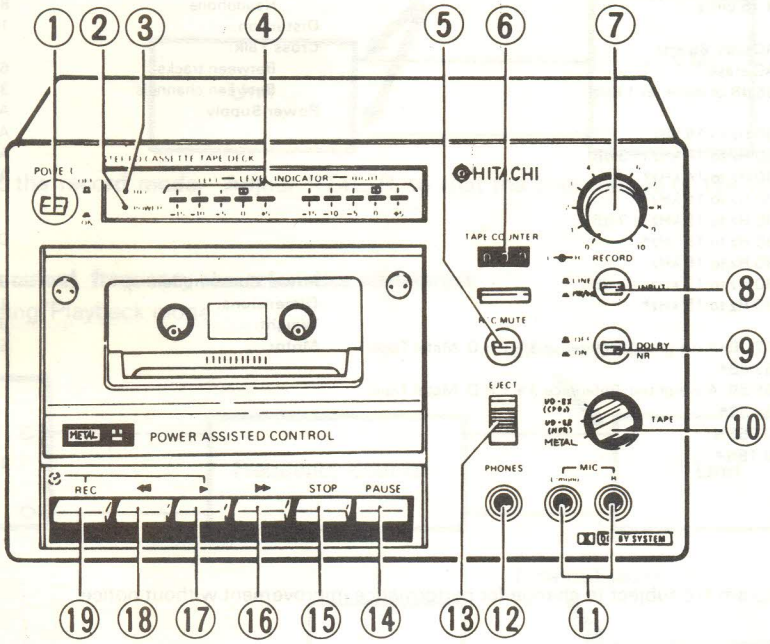

KEY TO ILLUSTRATIONS

1. POWER (MAINS) SWITCH
2. POWER INDICATOR
3. RECORDING INDICATOR
4. LEVEL INDICATORS
5. REC. MUTE SWITCH
6. TAPE COUNTER
7. RECORDING LEVEL CONTROLS
8. INPUT SELECTOR
9. DOLBY NR SWITCH
10. TAPE SELECT SWITCH
11. MICROPHONE SOCKETS (L/mono and R)
12. HEADPHONE SOCKET
13. EJECT BUTTON
14. PAUSE BUTTON
15. STOP BUTTON
16. FAST FORWARD BUTTON
17. PLAYBACK BUTTON
18. REWIND BUTTON
19. RECORD BUTTON

SAFETY PRECAUTION

The following precautions should be observed when servicing.

1. Since many parts in the unit have special safety related characteristics, always use genuine Hitachi's replacement parts. Especially critical parts in the power circuit block should not be replaced with other makes.
   Critical parts are marked with ⚠ in the schematic diagram and circuit board diagram.
2. Before returning a repaired unit to the customer, the service technician must thoroughly test the unit to ascertain that it is completely safe to operate without danger of electrical shock.

STEREO CASSETTE TAPE DECK

April 1980

SPECIFICATIONS

Semi-conductors:	
Module:	1
IC's:	5
Transistors:	6[D-M1 (U, C)]
	7[D-M1 (W)/D-M2 (FS, BS, AU, W)]
Diodes:	10[D-M1 (U, C)]
	11[D-M2 (FS, BS, AU, W)]
	12[D-M1 (W)]
LED's:	12
Track System:	4 track 2 channel
Tape:	Cassette tape (C-30, 60, 90)
Tape Speed:	4.75 cm/s
Recording System and Bias Frequency:	AC bias, 85 kHz
Erasing System:	AC erase
Erase Ratio:	65 dB or more (at 1 kHz)
Frequency Response:	
UD-ER (NOR)	30 Hz to 15 kHz
	30 Hz to 14 kHz (±3 dB)
	30 Hz to 14 kHz*
UD-EX (CrO_2)	30 Hz to 16 kHz
	30 Hz to 15 kHz (±3 dB)
	30 Hz to 15 kHz*
Metal	30 Hz to 16 kHz
	30 Hz to 15 kHz (±3 dB)
	30 Hz to 15 kHz*
S/N (Signal to Noise Ratio):	
Dolby NR OFF:	57 dB (A weighted, Reference 3% T.H.D. Metal Tape)
	57 dB*
Dolby NR ON:	65 dB (A weighted, Reference 3% T.H.D. Metal Tape)
	64 dB*
Wow and Flutter:	0.055%
	0.18%*
Input Sensitivity and Impedance:	
Microphone:	0.35mV, 300 ohms to 5 kohms
Line in:	60mV, 50 kohms or more
DIN (Record/Playback):	0.35mV, 3.3 kohms [D-M1 (W)/D-M2 (FS, BS, AU, W)]
Output Level:	500mV or more
Output Load Impedance:	
Line out:	50 kohms or more
DIN (Record/Playback):	500mV [D-M1 (W)/D-M2 (FS, BS, AU, W)]
Headphone:	8 ohms to 2 kohms
Distortion:	1.5% (1 kHz 0 VU)
Cross Talk:	
Between tracks:	60 dB (at 1 kHz) or more
Between channels:	30 dB (at 1 kHz) or more
Power Supply:	AC 120V, 60 Hz [D-M1 (U, C)]
	AC 220V, 50 Hz [D-M2 (FS)]
	AC 240V, 50 Hz [D-M2 (BS, AU)]
	AC 100 to 120V, 200 to 240V, 50/60 Hz [D-M1 (W)/D-M2 (W)]
	DC12V (Use car battery adaptor) [D-M1 (U, C, W)]
Power Consumption:	9.5W
Dimensions:	146(H) × 230(W) × 162(D) mm
Weight:	3.5 kg
Motor:	Electronically controlled motor

*** According to DIN 45 500**

Specifications and Schematic diagram are subject to change for performance improvement without notice.

DISASSEMBLY

1. Cassette lid

1) Pressing the eject botton opens the cassette cover.

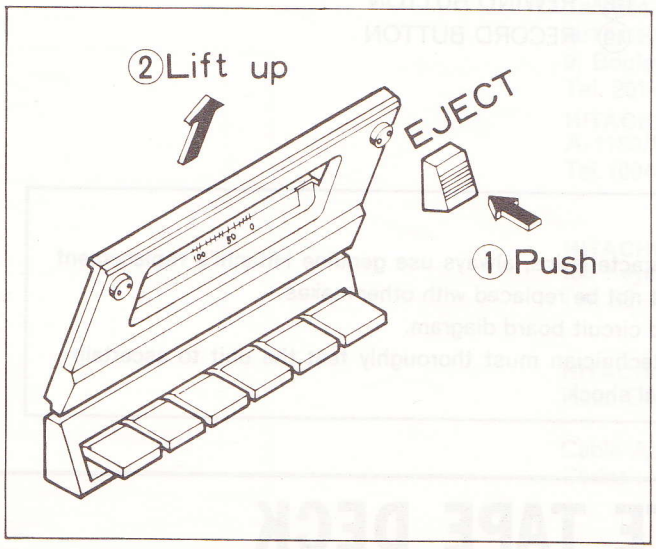

2. Top case

① 4 screws

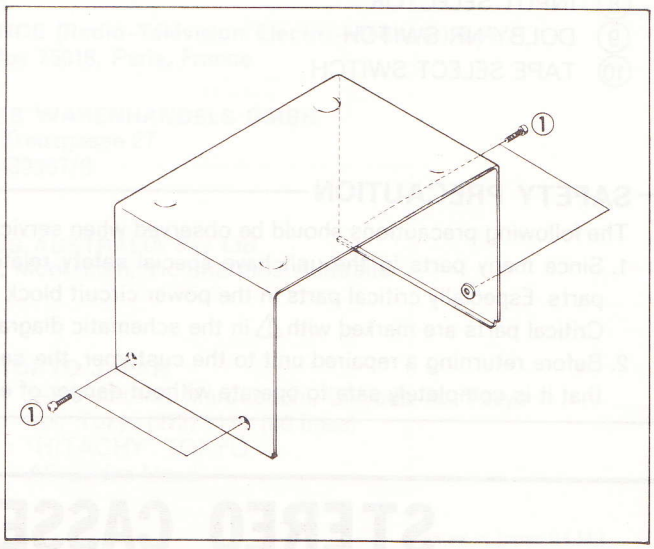

3. Front panel

1) Cassette lid (See item 1)
2) Top case (See item 2)
3) Remove the REC LEVEL botton and TAPE selector botton.
4) (2—1) 2 screws
5) (2—2) 3 screws

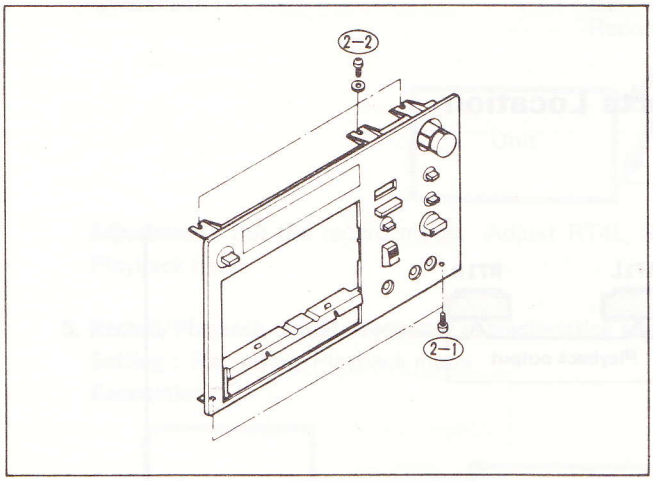

4. Main PC board

1) Front panel (See item 3)
2) (3—1) 1 screw
3) (3—2) 1 screw

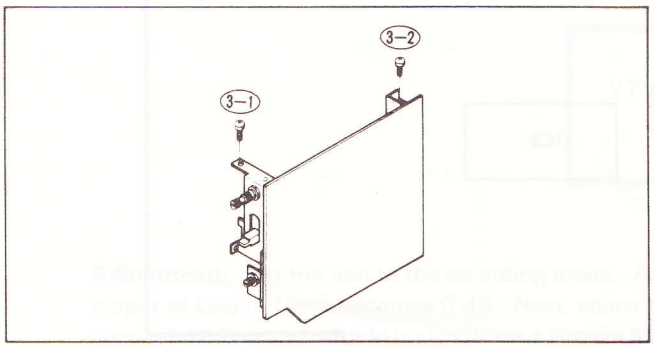

5. Cassette chassis

1) Main PC board (See item 4)
2) (4—1) 1 screw
3) (4—2) 2 screws
4) (4—3) 2 screws

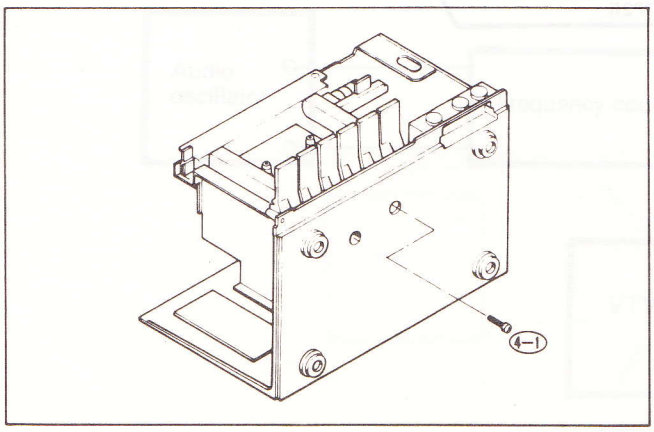

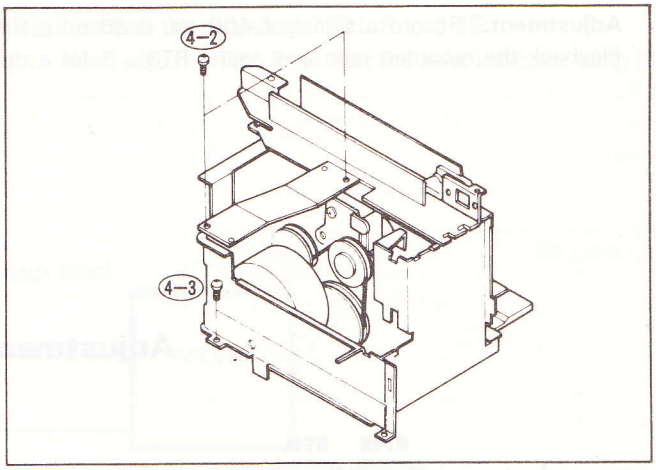

6. Power PC board [D-M1 (U, C, W)]

1) Cassette chassis (See item 5)
2) (5—1) 2 screws
3) (5—2) 1 screw

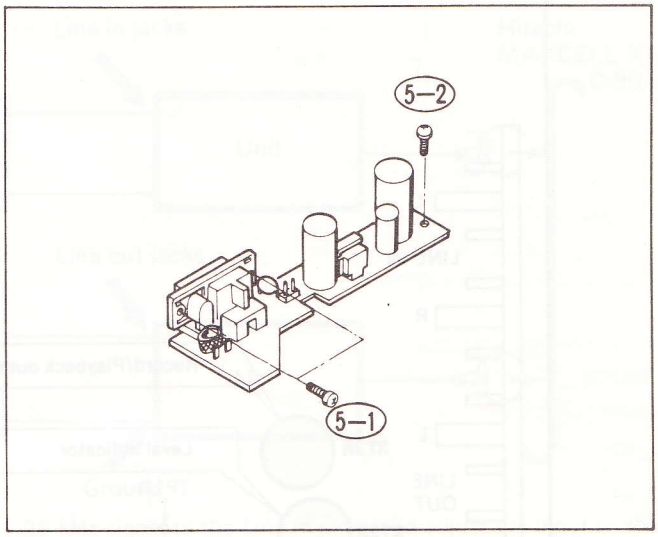

6-1. Power PC board [D-M2 (FS, BS, AU, W]

1) Cassette chassis (See item 5)
2) (5—1) 1 screw
3) (5—2) 1 screw

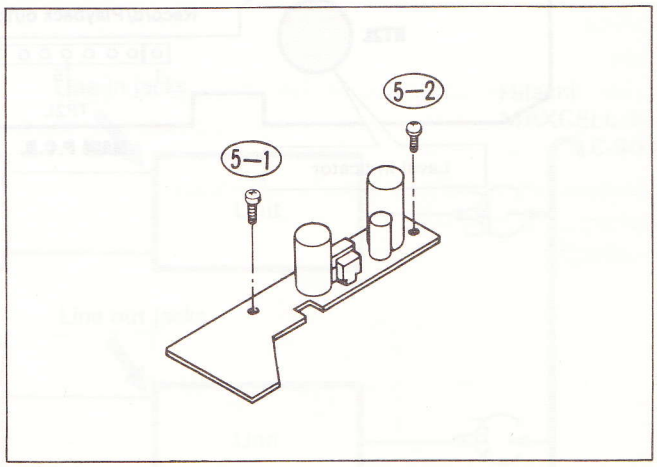

ADJUSTMENT

Perform the following adjustments in the sequence stated after cleaning the head, pressure roller, and capstan with a head cleaning stick moisted in alcohol. Also, unless specially indicated otherwise, set the switches and controls to the positions indicated in the table.

Symbol No.	Switches and Control	Position	Symbol No.	Switches and Control	Position
S2	Input switch	LINE	S3	Dolby NR switch	OFF
S5	Tape selector switch	UD-ER (Normal)	RV1L, R	Record level controls	Maximum
S8	Rec mute switch	OFF			

1. Tape speed adjustment

Setting : Playback mode

Connection :

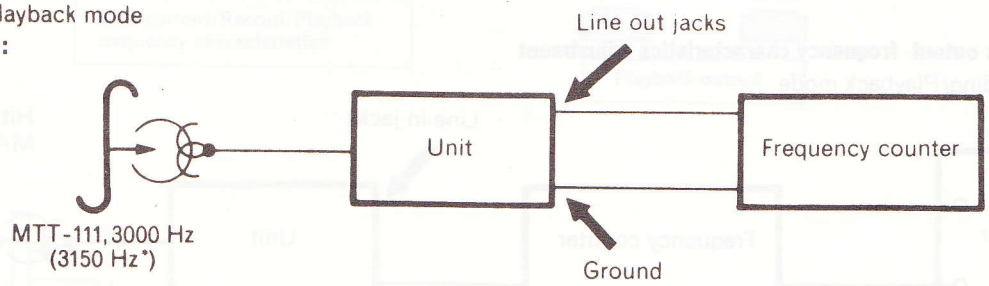

Adjustment : Warm up the unit for approximately 20 minutes ; then playback test tape MTT-111, 3000 Hz (3150 Hz*), a reading of 3030 ±10 Hz (3150 Hz *). Carry out the measurement at the middle of the tape.

* According to DIN 45 500.

2. Head azimuth adjustment

Setting : Playback mode

Connection :

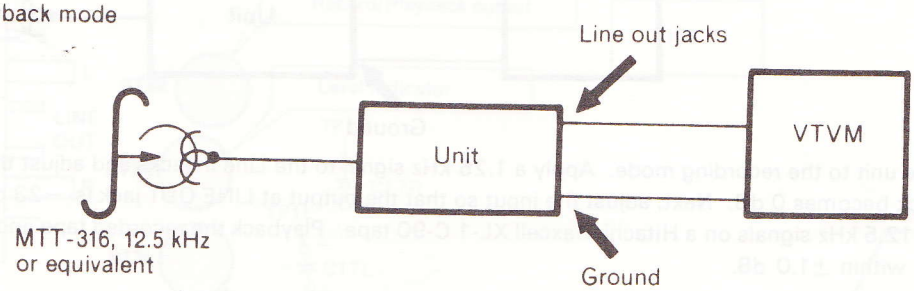

Adjustment : Playback a test tape (MTT-316, 12.5 kHz or equivalent) and adjust the azimuth adjustment screw for maximum output.

Note :

When the maximum values of both channels are different, tune to the maximum value of the L channel. In this case, the difference between the maximum values of both channels should be 2 dB.

3. Playback output and level indicator adjustment

Setting : Playback mode

Connection :

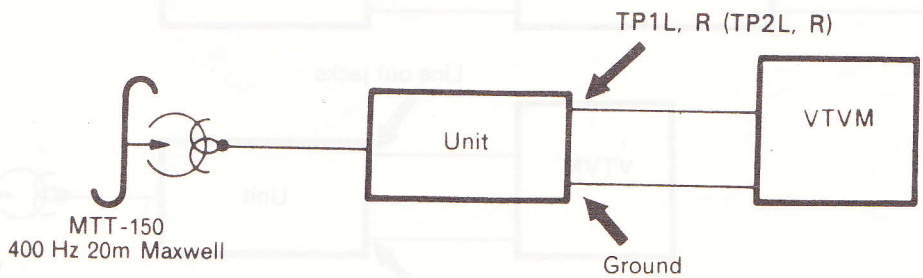

Adjustment : Playback a Dolby calibration tape (MTT-150, 400 Hz 20m Maxwell) and adjust RT1L, R so that the voltage of TP1L, R becomes 0.775V.

Next, apply a 1 kHz signal to the LINE IN jacks and adjust the input so that the output at TP2L, R is 0 dB. Then, adjust RT2L, R so that the level indicator lamp (0 dB) light. Next, adjust RT2L, R so that the level indicator lamp (0 dB) goes off when the output of the TP2L, R is −1 dB.

4. Bias current adjustment

Setting : Recording mode

Connection :

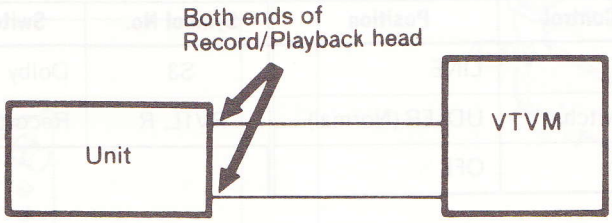

Adjustment : Set the record mode. Adjust RT4L, R so that the bias voltage of 15V is applied to the both ends of Record/Playback head.

5. Record/Playback outout frequency characteristics adjustment

Setting : Recording/Playback mode

Connection :

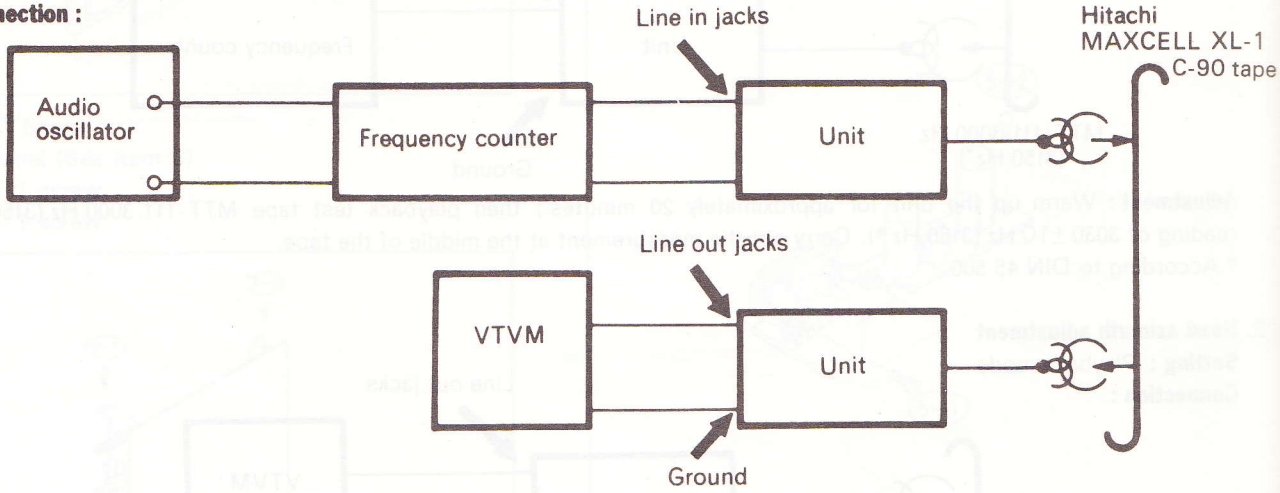

Adjustment: Set the unit to the recording mode. Apply a 1.25 kHz signal to the Line in jacks and adjust the input so that the output of Line out jack becomes 0 dB. Next, adjust the input so that the output at LINE OUT jack is −23 dBm (55mV). And, record 1.25 kHz and 12.5 kHz signals on a Hitachi Maxcell XL-1 C-90 tape. Playback the recorded tape and adjust RT4L, R for an output difference within ±1.0 dB.

6. Record/Playback output adjustment

Setting : Recording/Playback mode

Connection :

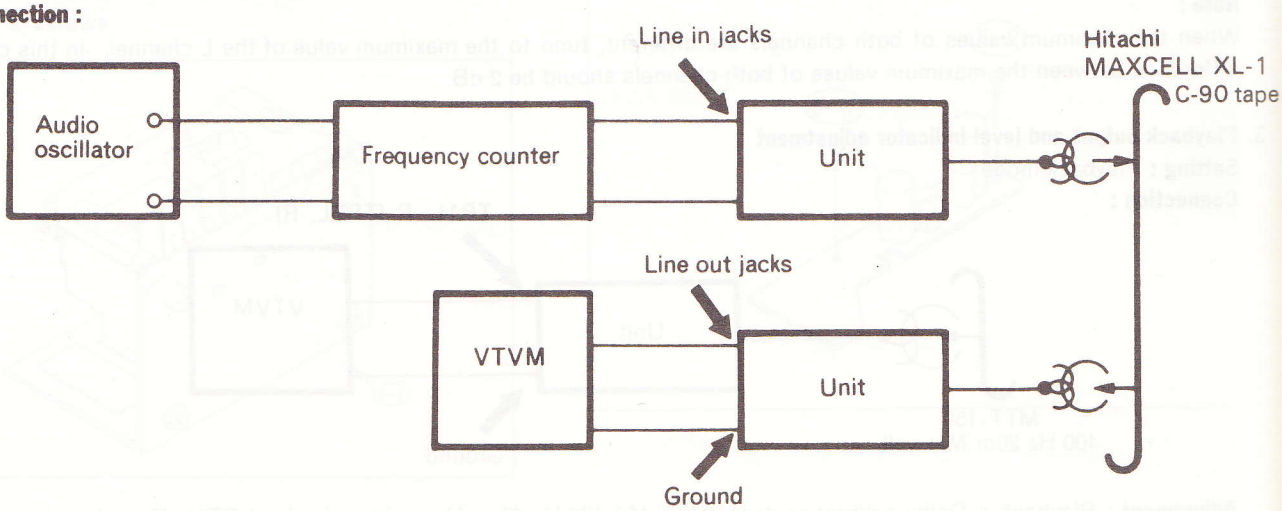

Adjustment: Record a signal of 400 Hz, 0 dB on a Hitachi Maxcell XL-1 C-90 tape. Playback the recorded tape and adjust RT3L, R for a playback output of 0 dB ±0.5 dB.

Adjustment Parts Location

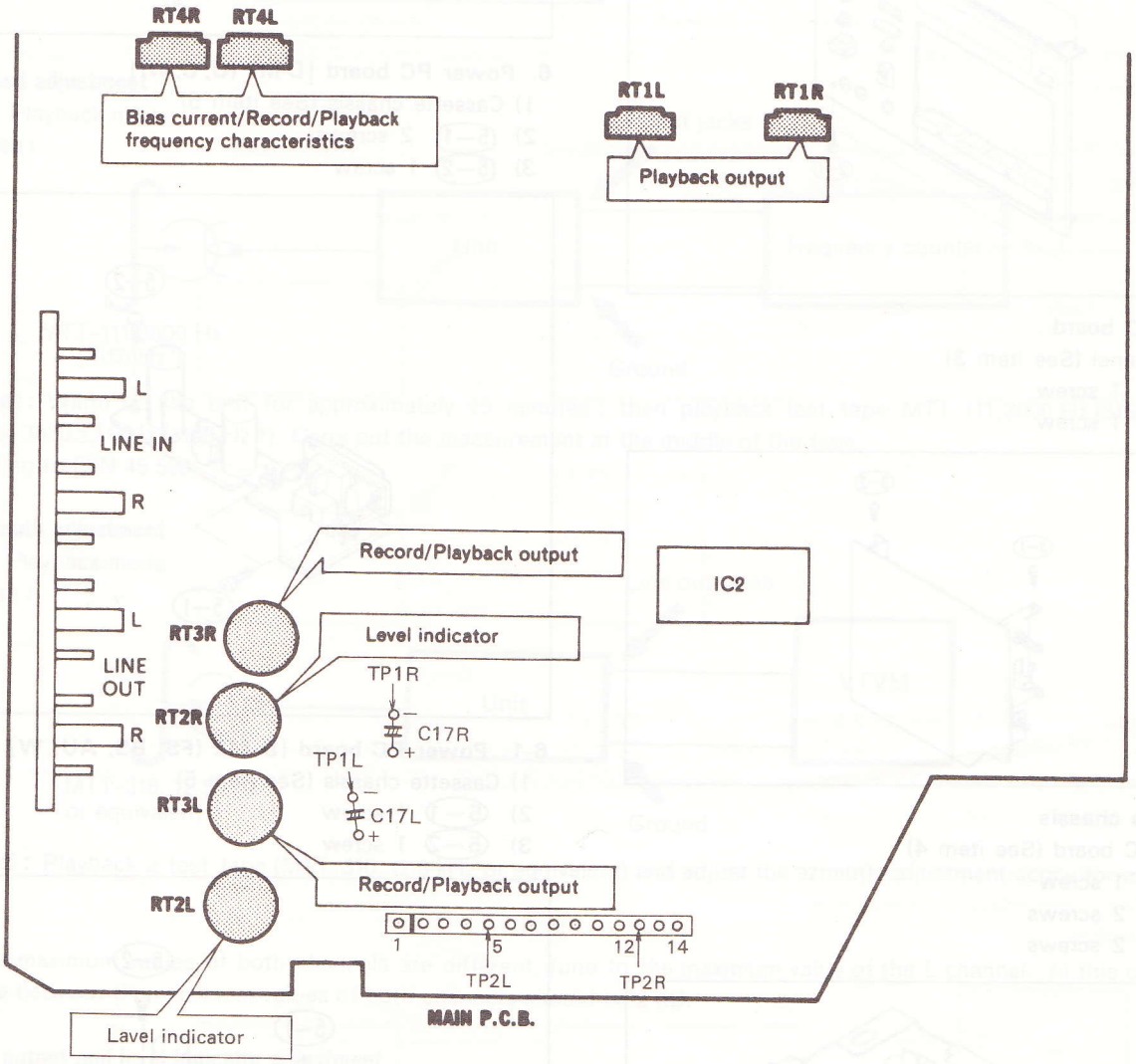

INSPECTION OF MECHANISM

	Check item		Reference value	Remarks
1	Pressure of pressure rolier		350±50gr	Note 1
2	Pressure of take-up roller		120 to 180gr	Note 2
3	Torque	Take-up	35 to 60gr-cm	Measure in playback mode
		FF	70 to 120gr-cm	Measure in Fast Forward mode
		Rewind	70 to 120gr-cm	Measure in Rewind mode
4	Back tension	Take-up side	Less than 6gr-cm	—
		Supply side	1 to 3gr-cm	—
5	Brake torque		More than 15gr-cm	—
6	Flywheel thrust gap		0.05 to 0.5mm	—

Note 1. Pressure of pressure roller

Set this unit in the playback mode and press the pressure roller in the direction of the arrow using a fan type tension gauge, and measure the pressure when the pressure roller is released from capstan.

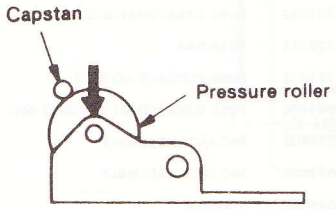

Note 2. Pressure of take-up roller

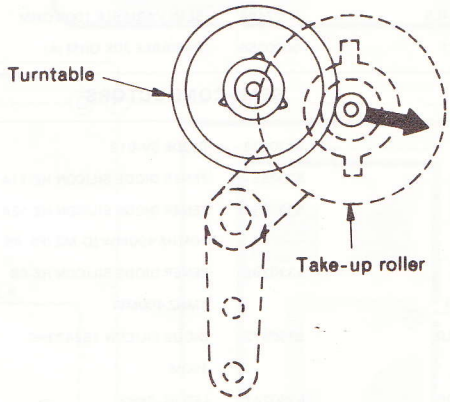

LUBRICATION

Lubricate one or two drops of machine oil to rotating point or lubricate grease to sliding point. Lubricate the respective parts listed below once every 1000 hours or once a year under normal conditions of use. Avoid oiling them excessively, or rotation may become irregular because of oil splashes.

Lubrication	Oil or grease
Motor shaft bearing	Oil
Capstan shaft bearing	
Pressure roller bearing	

REPLACEMENT PARTS LIST

SYMBOL-NO	P-NO	DESCRIPTION
CAPACITORS		
C3LR	0209005	CERAMIC DISC (RESISTOR SHAPE) 390PF ±10%
C5LR	0209006	CERAMIC DISC (RESISTOR SHAPE) 470PF ±10%
C6LR	0209002	CERAMIC DISC (RESISTOR SHAPE) 220PF ±10%
C19LR	0209022	CERAMIC DISC (RESISTOR SHAPE) 2200PF ±10%
C20	0209006	CERAMIC DISC (RESISTOR SHAPE) 470PF ±10% [D-M1 (C, W)/D-M2 (FS, BS, AU, W)]
	0209010	CERAMIC DISC (RESISTOR SHAPE) 1000PF ±10% [D-M1(U)]
C22LR	0209022	CERAMIC DISC (RESISTOR SHAPE) 0.0022MF ±30%
RESISTORS		
R103	0170476	FUSE 47 OHM±5% [D-M2 (FS, BS, AU)]
	0170482	FUSE 15 OHM±5% [D-M1 (U, C, W)]
RT1LR	5007165	SEMI VARIABLE 10K OHM
RT2LR	5007186	SEMI VARIABLE 10K OHM
RT3LR	5007186	SEMI VARIABLE 10K OHM
RT4LR	5007168	SEMI VARIABLE 100K OHM
RV1	5000556	VARIABLE 20K OHM (A)
SEMI-CONDUCTORS		
D1	5330373	DIODE SV-01B
D2	5330551	ZENER DIODE SILICON HZ-11A [D-M1 (U, C, W)]
	5330531	ZENER DIODE SILICON HZ-12A 10MHZ 400MW [D-M2 (FS, BS, AU, W)]
D3	5330392	ZENER DIODE SILICON HZ-6B 1MHZ 400MW
D4LR	5330572	DIODE SILICON 1S2473HC 100M
LED5	5380247	LED GL-3PR2
LED6	5380247	LED GL-3PR2
LED7LR	5380392	LED GL-9PG9
LED8LR	5380392	LED GL-9PG9
LED9LR	5380392	LED GL-9PG9
LED10LR	5380391	LED GL-9PR9
LED11LR	5380391	LED GL-9PR9
D12	5330573	DIODE SILICON 1S2473 300MHZ 300MW
D13	5330374	DIODE SV-02B
D100	5330572	DIODE SILICON 1S2473HC 100M [D-M1 (W)/D-M2 (FS, BS, AU, W)]
D101	5330721	DIODE IN34A-TFI [D-M1 (W)/D-M2 (FS, BS, AU, W)]
D102	5331242	DIODE 1SR-34P [D-M1 (U, C, W)]
IC1LR	5350963	IC BA340
IC2	5350462	IC HA11122W
IC3LR	5350761	IC SN16880
M1	5056832	MODULE TA3003D
Q1LR	5321295	TRANSISTOR 2SC1740E
Q2LR	5321295	TRANSISOTR 2SC1740E
Q3	5321301	TRANSISTOR SILICON 2SC1061
Q10	5320603	TRANSISTOR SILICN 2SA673A-C 80MHZ 400MW [D-M1 (W)/D-M2 (FS, BS, AU, W)]

SYMBOL-NO	P-NO	DESCRIPTION
TRANSFORMERS		
⚠ T1	5211356	POWER [D-M1 (U)]
⚠ T1	5211932	POWER 400G 8.2VA [D-M2 (BS, AU)]
⚠ T1	5211357	POWER SVA, 300G [D-M1 (C)]
⚠ T1	5211933	POWER 8VA 400G [D-M2 (FS)]
⚠ T1	5212056	POWER [D-M1 (W)/D-M2 (W)]
COILS		
L1LR	5161664	DOLBY FILTER
L2LR	5260215	TRAP 33MH
L3LR	5120562	BIAS TRAP
L4	5152087	PEAKING 100MICRO H
MISCELLANEOUS		
⚠	5747214	POWER CORD [D-M1 (W)]
⚠	5746158	POWER CORD [D-M2 (FS)]
⚠	5747262	POWER CORD [D-M1 (U, C)]
⚠	5746541	POWER CORD [D-M2 (BS)]
⚠	5746312	POWER CORD [D-M2 (W)]
⚠	5746431	POWER CORD [D-M2 (AU)]
⚠	5652121	POWER SOCKET [D-M1 (U, C, W)]
F1	5721042	FUSE 1.25A [D-M1 (U, C, W)]
F2	5720175	FUSE 0.8A
⚠ F3	5721012	FUSE 315MA [D-M2 (BS)]
⚠ F3	0591100	FUSE 200MA [D-M1 (W)/D-M2 (W)]
J1LR	5679402	MIC JACK ASSEMBLY
J2	5679402	MIC JACK ASSEMBLY
J3LR	5676082	PIN JACK
J4LR	5676082	PIN JACK
J5	5653211	DIN JACK [D-M1 (W)/D-M2 (FS, BS, AU, W)]
OSC1	5260791	OSCILLATOR BLOCK
RL1	5641141	REED RELAY [D-M1 (W)/D-M2 (FS, BS, AU, W)]
S1	5623511	SLIDE SWITCH (REC/PLAY)
S2	5634271	PUSH SWITCH (INPUT)
S3	5634271	PUSH SWITCH (DOLBY NR)
S4	5633311	PUSH SWITCH (BIAS BEAT)
S5	5612293	ROTARY SWITCH (TAPE SELECTOR)
S6	5633361	MICRO SWITCH (MUTING)
⚠ S7	5637038	PUSH SWITCH (POWER) [D-M1 (U, C, W)/D-M2 (W)]
⚠	5633541	PUSH SWITCH (POWER) [D-M2 (FS, BS, AU)]
S8	5623101	SLIDE SWITCH (REC MUTE)
S9	5633361	MICRO SWITCH (REC)
⚠ S10	5605082	VOLTAGE CHANGE-OVER SWITCH [D-M1 (W)/D-M2 (W)]
FOR ACCESSORIES		
	5895501	PATCH CORD
	7740321	HEAD CLEANING STICK
	5660212	SIEMENS PLUG [D-M1 (W)/D-M2 (W)]

WIRING DIAGRAM

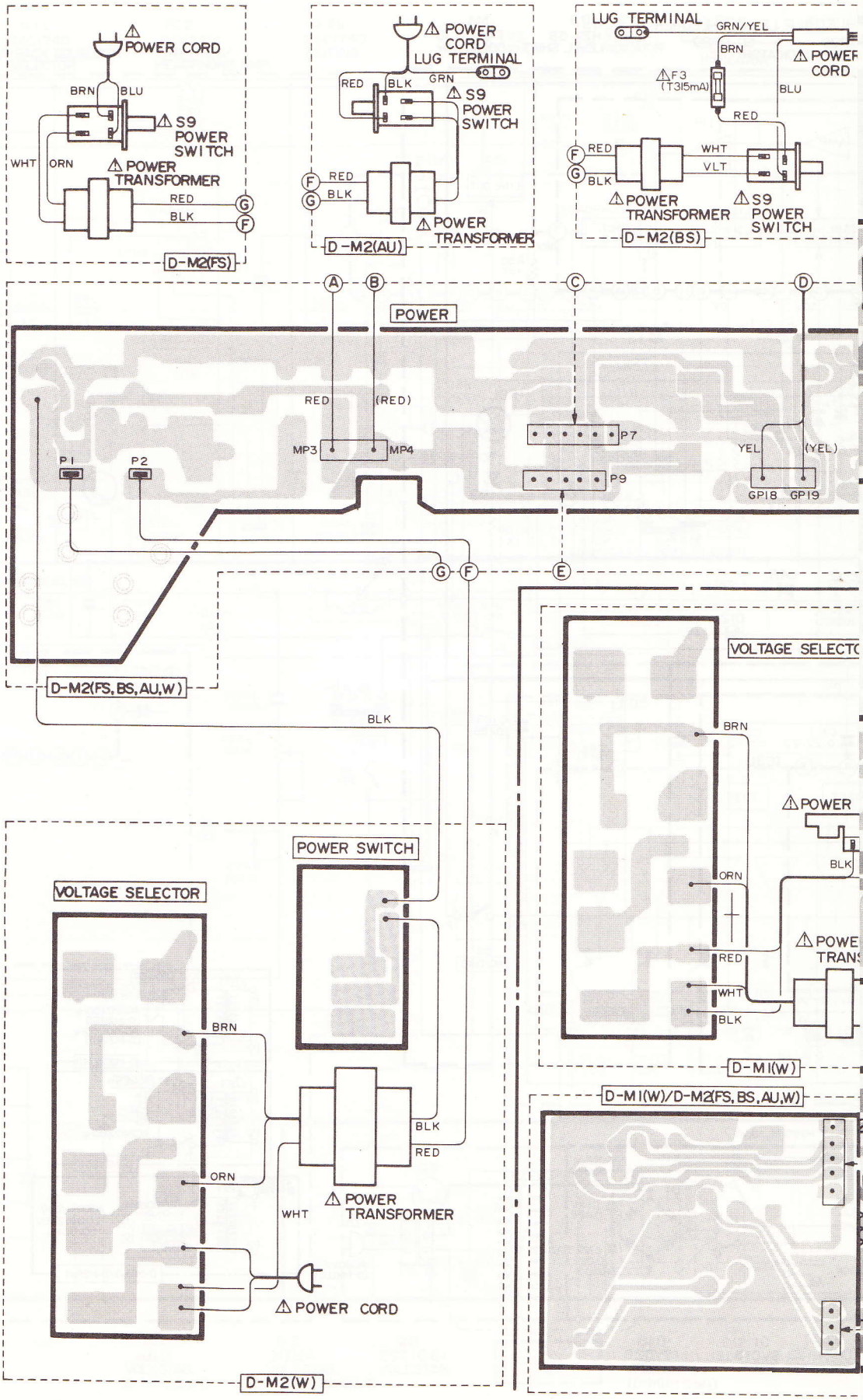

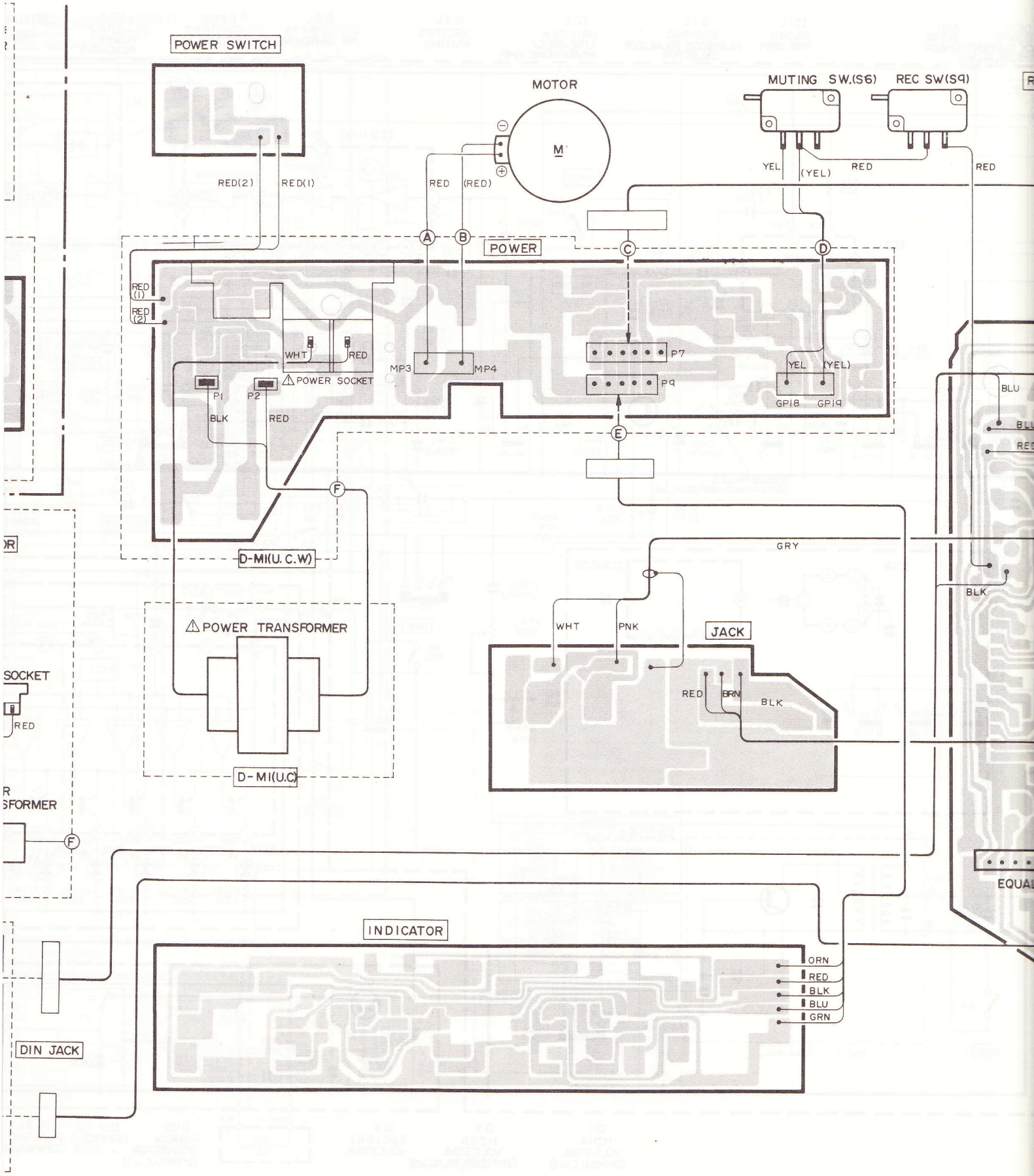
POWER SWITCH
MOTOR
M
MUTING SW.(S6)
REC SW(S9)
RED(2)
RED(1)
RED
(RED)
YEL
(YEL)
RED
RED
A
B
POWER
C
D
RED (1)
RED (2)
WHT
RED
MP3
MP4
P7
P9
YEL
(YEL)
GP18
GP19
BLU
P1
P2
POWER SOCKET
BLK
RED
E
F
D-MI(U.C.W)
GRY
BLK
POWER TRANSFORMER
WHT
PNK
JACK
RED
BRN
BLK
D-MI(U.C)
SOCKET
RED
SFORMER
F
EQUA
INDICATOR
ORN
RED
BLK
BLU
GRN
DIN JACK

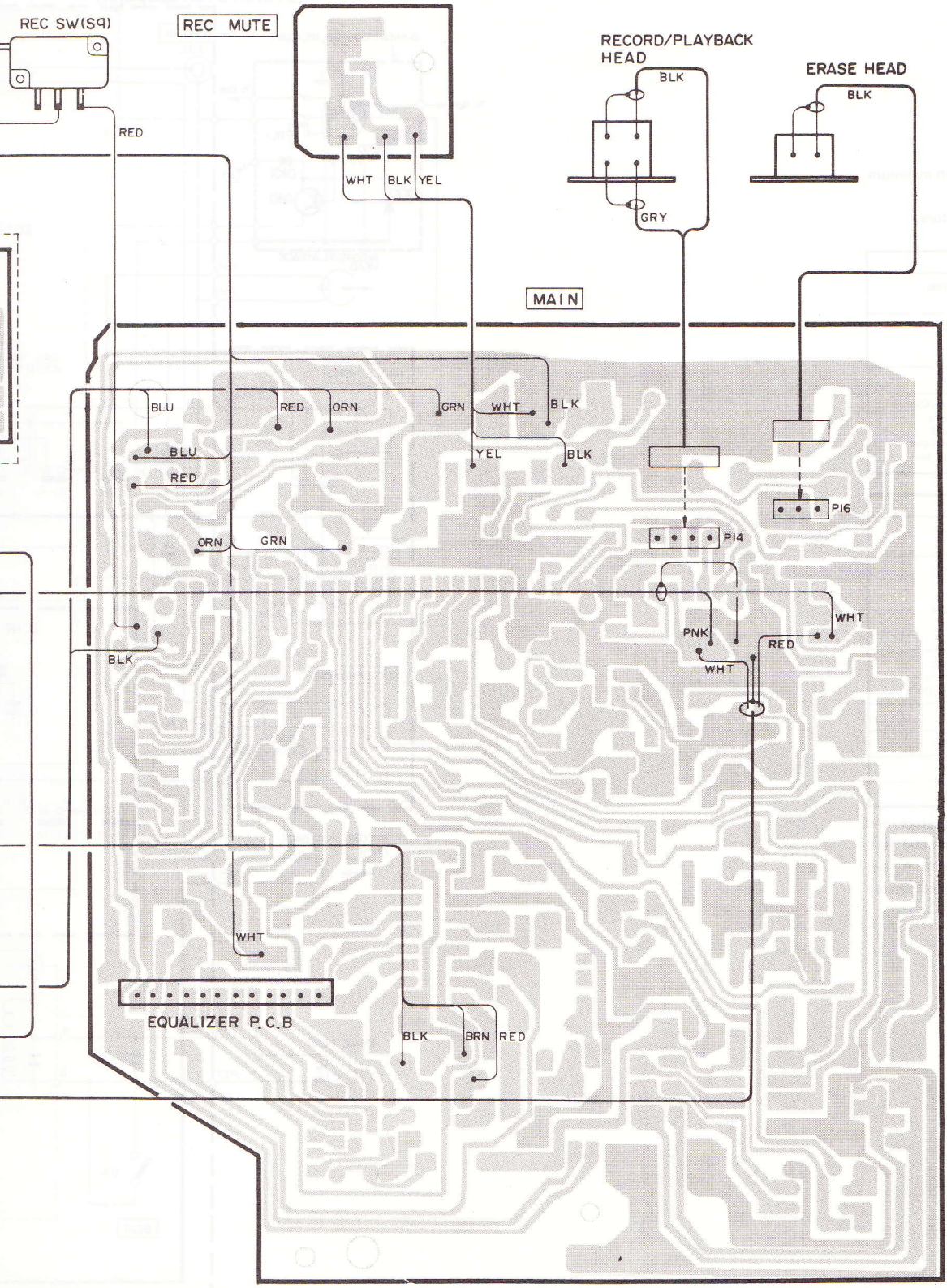
REC SW(S9)
REC MUTE
RECORD/PLAYBACK HEAD
ERASE HEAD
BLK
GRY
BLK
RED
WHT
BLK
YEL
MAIN
BLU
RED
ORN
GRN
WHT
BLK
BLU
RED
YEL
BLK
PI6
PI4
ORN
GRN
WHT
PNK
RED
WHT
BLK
WHT
EQUALIZER P.C.B
BLK
BRN
RED

SCHEMATIC DIAGRAM

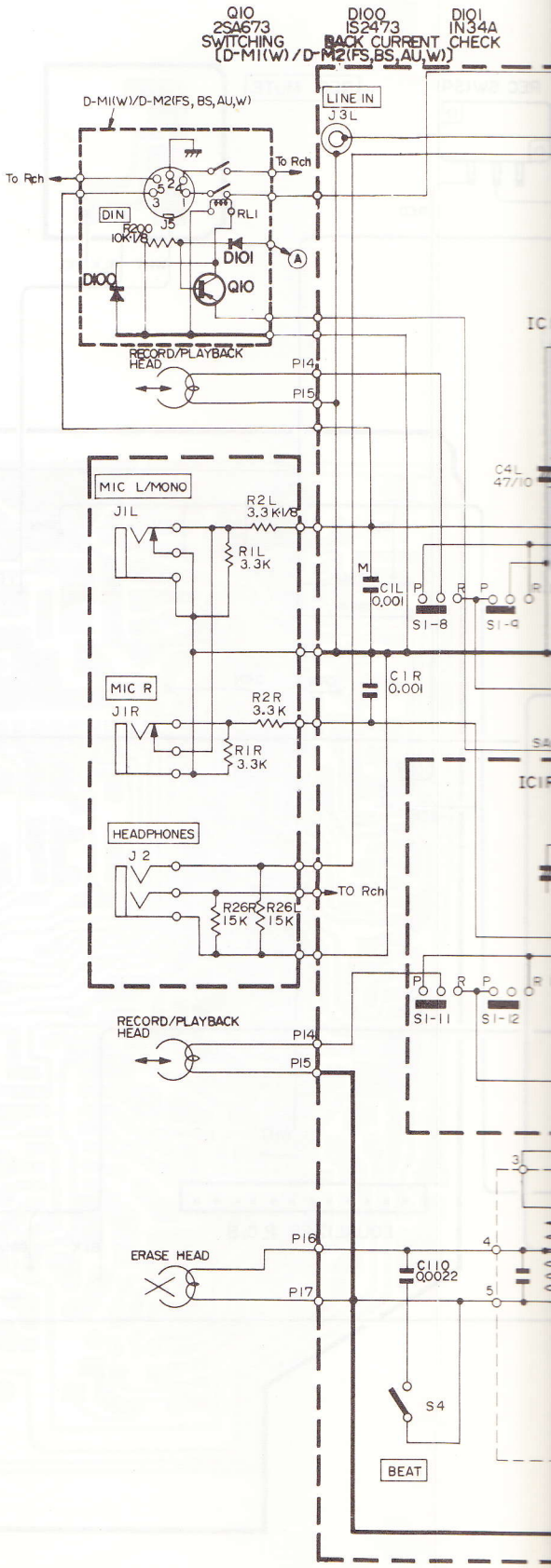

Note:

1. Voltage measured at base of chassis with minimum volume control and no signal.
2. Nomenclature of Resistors and Capacitors.

	Circuit No.	
R101 150 RS·1·K	Value	No indicated Ω (Ohm) M : 1000 kΩ
	Toleerance	No indicated ±5% K: ±10% M: ±20%
	Wattage	No indicated 1/4W
	Sort	No indicated Carbon film RC: Composition RW: Wire wound RS: Oxide metal film RN: Fixed metal film

	Circuit No.	
C101 0.001·M	Value	No indicated μF P : PF
	Tolerance	No indicated ±10% J ±5% M: ±20% Z: +80%, −20% D: ±0.5 pF C: ±0.25 pF
	Sort	Ceramic
		Electrolytic
		M Mylar
		P Polyster
		S Styrol
C102 0.1/16	Voltage	No indicated 50WV

3. Be sure to make your orders of resistors and capacitors with value, voltage, tolerance and sort.
4. When replacing capacitors marked with *, use specified ones stated on parts list since required temperature characteristics.

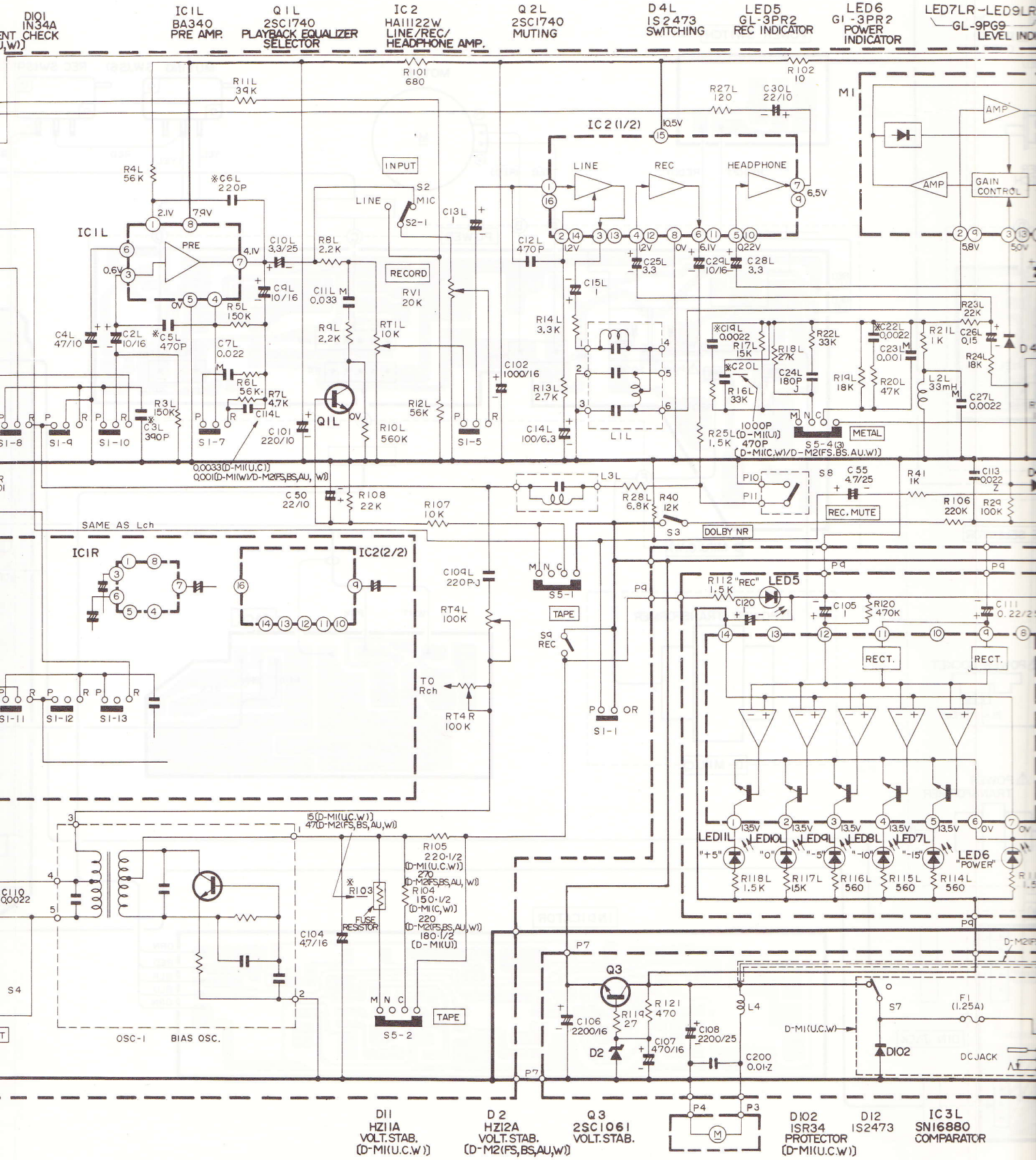
D101 1N34A ENT CHECK (U,W)
IC1L BA340 PRE AMP.
Q1L 2SC1740 PLAYBACK EQUALIZER SELECTOR
IC2 HA11122W LINE/REC/ HEADPHONE AMP.
Q2L 2SC1740 MUTING
D4L 1S2473 SWITCHING
LED5 GL-3PR2 REC INDICATOR
LED6 GL-3PR2 POWER INDICATOR
LED7LR-LED9LR GL-9PG9 LEVEL IND
R101 680
R102 10
R11L 39K
R27L 120
C30L 22/10
M1
AMP
GAIN CONTROL
IC2(1/2)
LINE
REC
HEADPHONE
INPUT
S2
MIC
S2-1
RECORD
RV1 20K
IC1L
PRE
R4L 56K
C6L 220P
C10L 3.3/25
R8L 2.2K
C9L 10/16
C11L 0.033
R5L 150K
C4L 47/10
C2L 10/16
C5L 470P
C7L 0.022
R6L 56K
R7L 4.7K
C11 4L
R9L 2.2K
RT1L 10K
Q1L
R3L 150K
C3L 390P
C101 220/10
R10L 560K
R12L 56K
C102 1000/16
C13L 1
C12L 470P
C15L 1
R14L 3.3K
R13L 2.7K
C14L 100/6.3
L1L
C25L 3.3
C29L 10/16
C28L 3.3
R23L 22K
R24L 18K
C26L 0.15
C19L 0.0022
R17L 15K
R18L 27K
R22L 33K
C22L 0.0022
C23L 0.001
R21L 1K
C20L
R16L 33K
C24L 180P J
R19L 18K
R20L 47K
L2L 33mH
C27L 0.0022
1000P (D-M1(U)) 470P (D-M1(C,W)/D-M2(FS,BS,AU,W))
S5-4(3)
METAL
R25L 1.5K
0.0033(D-M1(U,C)) 0.001(D-M1(W)/D-M2(FS,BS,AU,W))
C50 22/10
R108 22K
R107 10K
L3L
R28L 6.8K
R40 12K
S3
DOLBY NR
S8
C55 4.7/25
REC. MUTE
R41 1K
C113 0.022 Z
R106 220K
R29 100K
SAME AS Lch
IC1R
IC2(2/2)
C109L 220P-J
RT4L 100K
TO Rch
RT4R 100K
S5-1
TAPE
S9 REC
S1-1
R112 1.5K
"REC"
LED5
C120
C105 1
R120 470K
C111 0.22/2
RECT.
LED11L "+5"
LED10L "0"
LED9L "-5"
LED8L "-10"
LED7L "-15"
LED6 "POWER"
R118L 1.5K
R117L 1.5K
R116L 560
R115L 560
R114L 560
C110 0.0022
15(D-M1(U,C,W)) 47(D-M2(FS,BS,AU,W))
R105 220·1/2 (D-M1(U,C,W)) 270 (D-M2(FS,BS,AU,W))
R104 150·1/2 (D-M1(C,W)) 220 (D-M2(FS,BS,AU,W)) 180·1/2 (D-M1(U))
R103
FUSE RESISTOR
C104 4.7/16
S4
OSC-1
BIAS OSC.
S5-2
TAPE
Q3
R119 27
R121 470
C106 2200/16
C107 470/16
C108 2200/25
C200 0.01-Z
D2
L4
S7
F1 (1.25A)
D102
DC JACK
D-M1(U,C,W)
D11 HZ11A VOLT.STAB. (D-M1(U,C,W))
D2 HZ12A VOLT.STAB. (D-M2(FS,BS,AU,W))
Q3 2SC1061 VOLT.STAB.
D102 1SR34 PROTECTOR (D-M1(U,C,W))
D12 1S2473
IC3L SN16880 COMPARATOR

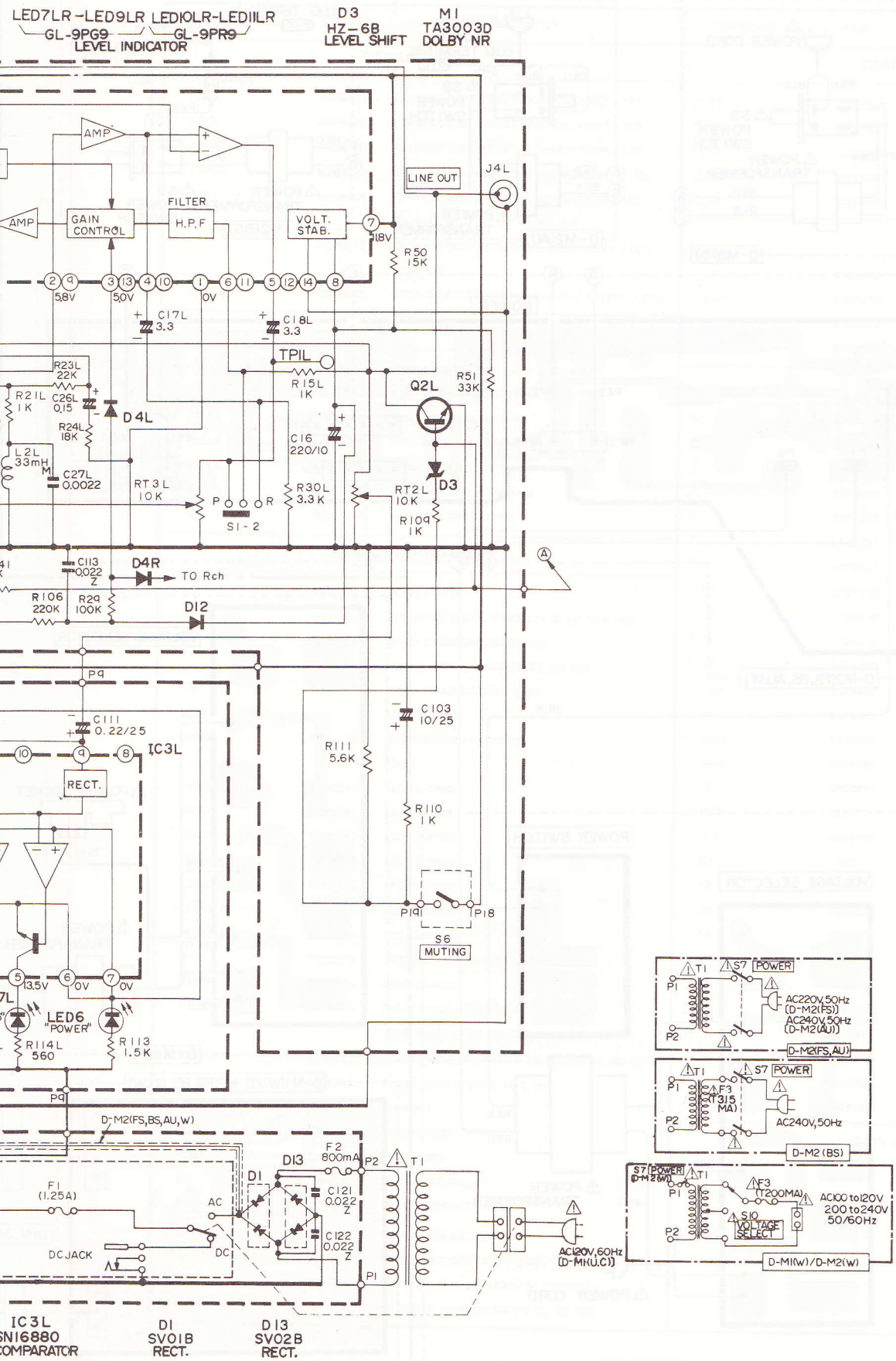
LED7LR-LED9LR LED10LR-LED11LR
GL-9PG9 GL-9PR9
LEVEL INDICATOR
D3
HZ-6B
LEVEL SHIFT
M1
TA3003D
DOLBY NR
AMP
AMP
GAIN CONTROL
FILTER
H.P.F
VOLT. STAB.
LINE OUT
J4L
R50 15K
5.8V
5.0V
0V
C17L 3.3
C18L 3.3
TP1L
R15L 1K
Q2L
R51 33K
R23L 22K
R21L 1K
C26L 0.15
D4L
R24L 18K
C16 220/10
L2L 33mH
C27L 0.0022
RT3L 10K
R30L 3.3K
RT2L 10K
D3
R109 1K
S1-2
C113 0.022 Z
D4R
TO Rch
R106 220K
R29 100K
D12
P9
C111 0.22/25
IC3L
RECT.
C103 10/25
R111 5.6K
R110 1K
P19
P18
S6
MUTING
13.5V
0V
0V
LED6 "POWER"
R114L 560
R113 1.5K
P9
D-M2(FS,BS,AU,W)
F1 (1.25A)
AC
DC
DC JACK
D1
D13
F2 800mA
C121 0.022 Z
C122 0.022 Z
P2
P1
T1
AC120V,60Hz (D-M1(U.C))
IC3L SN16880 COMPARATOR
D1 SV01B RECT.
D13 SV02B RECT.
S7 POWER
AC220V,50Hz (D-M2(FS))
AC240V,50Hz (D-M2(AU))
D-M2(FS,AU)
F3 (T315 MA)
AC240V,50Hz
D-M2 (BS)
F3 (T200MA)
AC100 to 120V
200 to 240V
50/60Hz
S10 VOLTAGE SELECT
D-M1(W)/D-M2(W)

CIRCUIT BOARD DIAGRAM

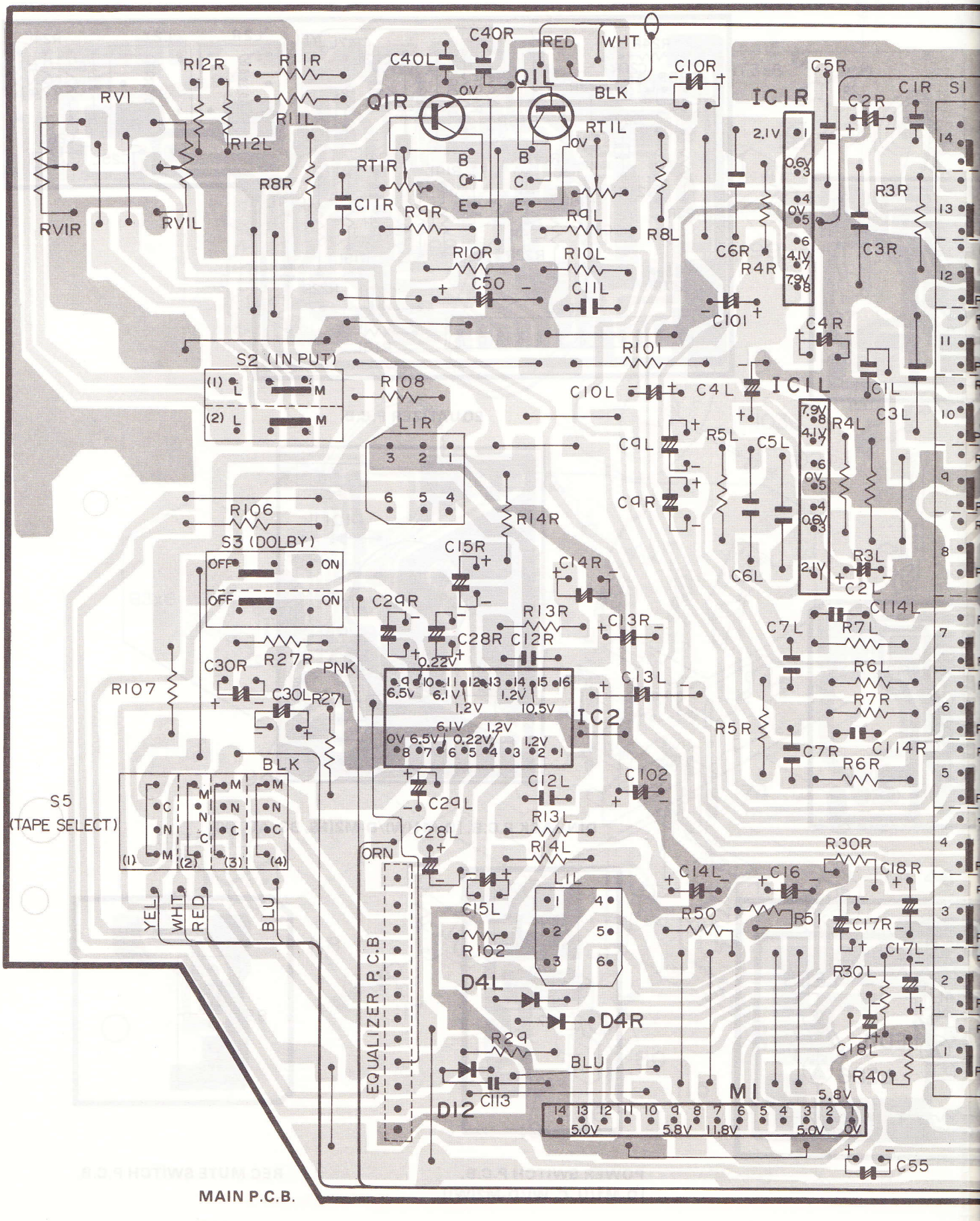

MAIN P.C.B.

: Ground : Signal, +B : Component side pattern

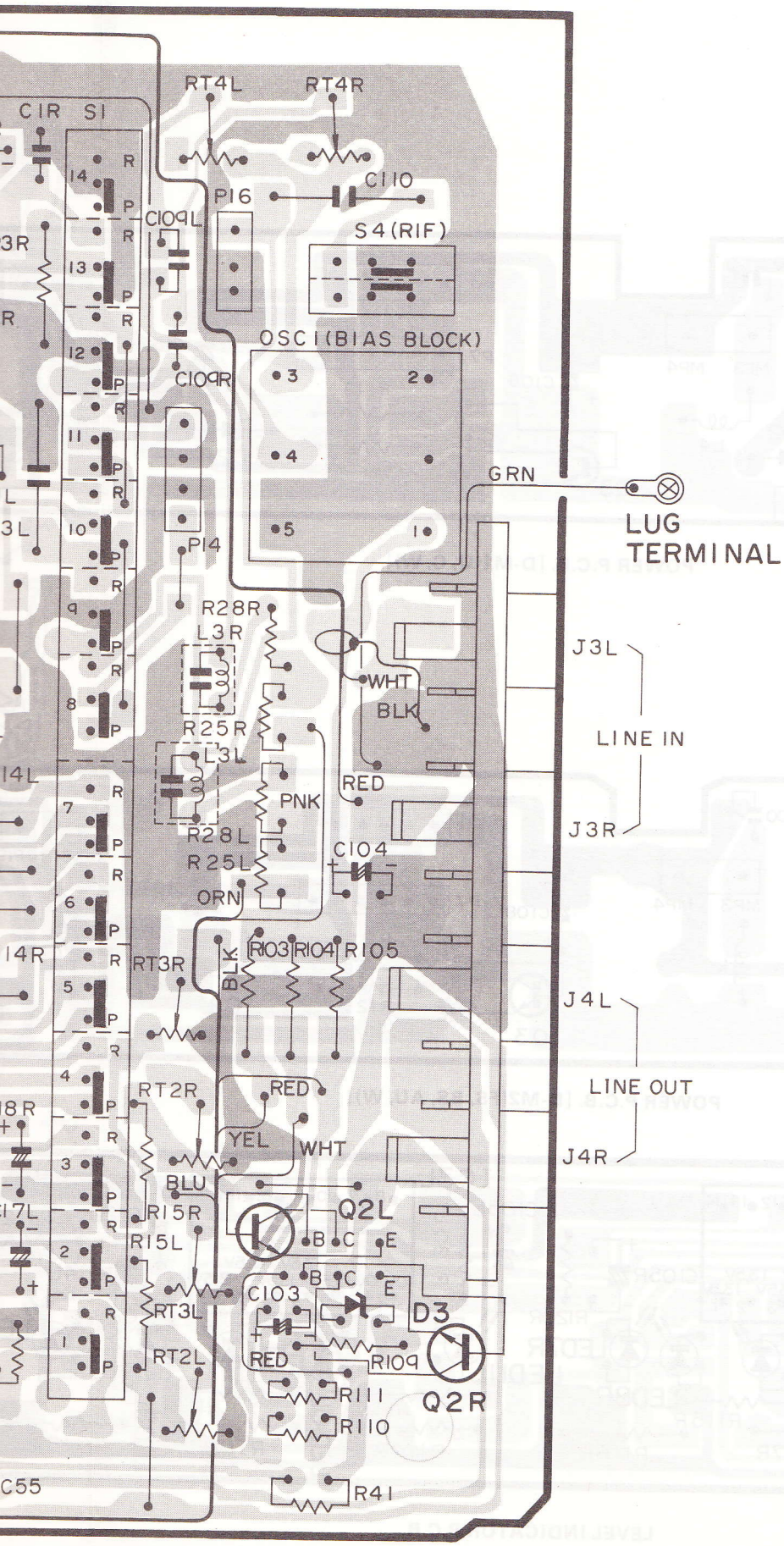

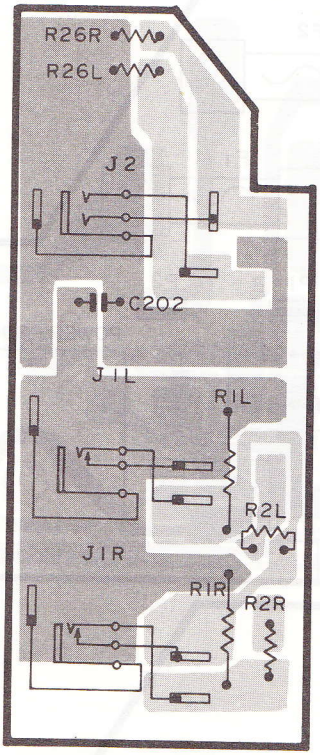

JACK P.C.B.

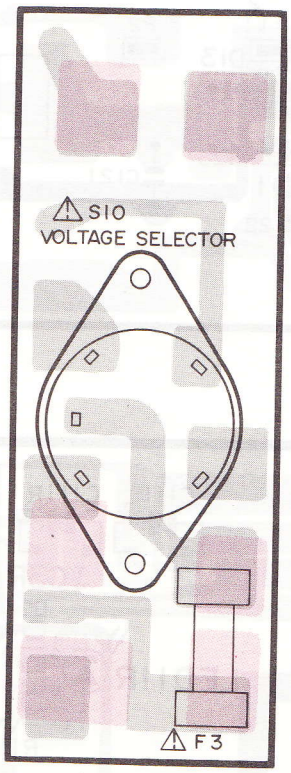

VOLTAGE SELECT SWITCH P.C.B.
[D-M1(W)/D-M2(W)]

CIRCUIT BOARD DIAGRAM

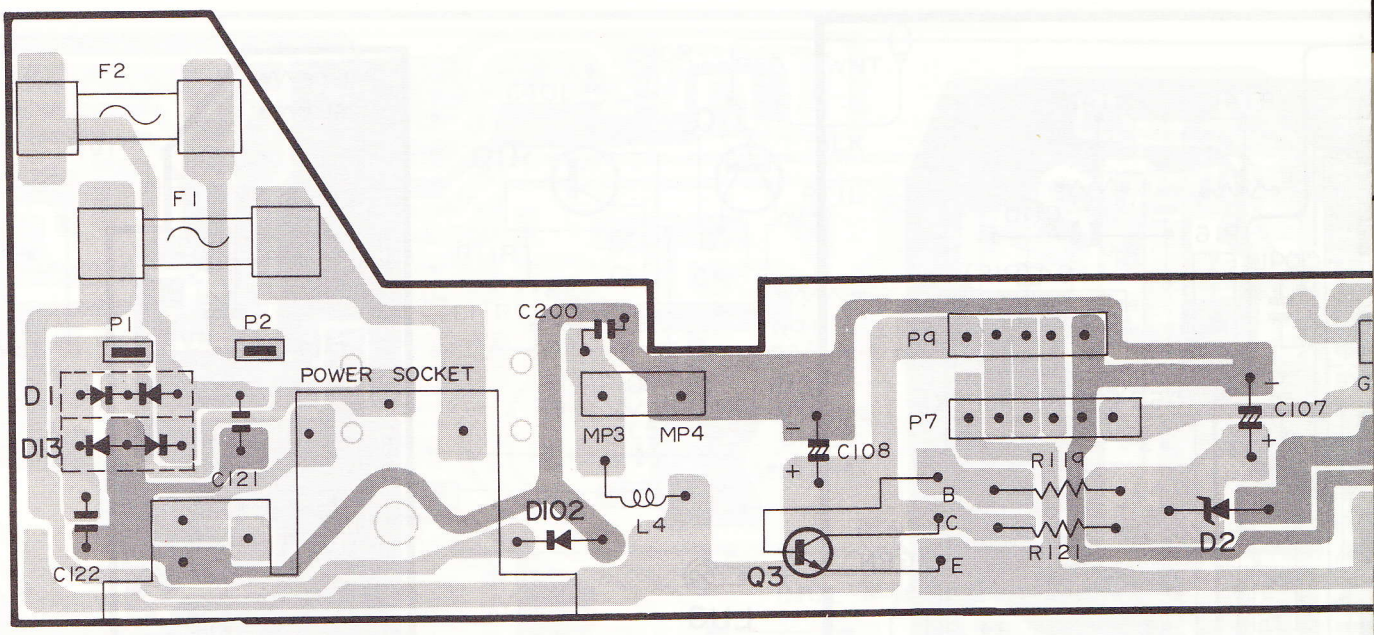

POWER P.C.B. [D-M1(U, C, W)]

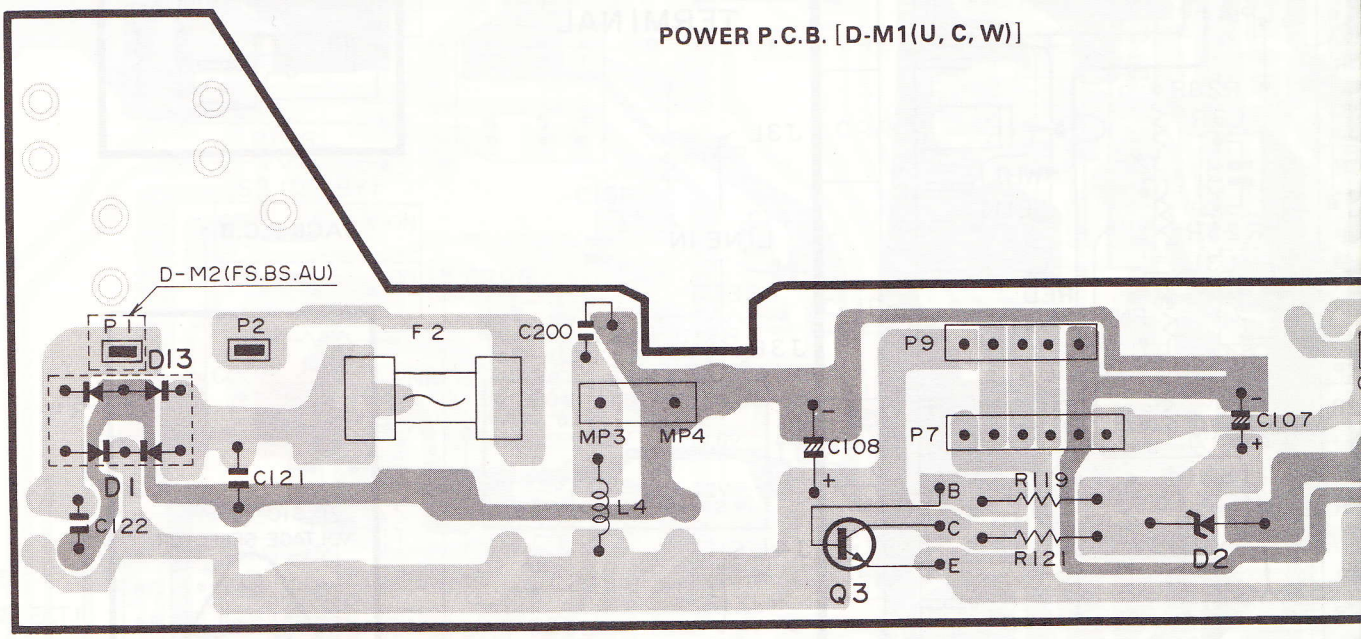

POWER P.C.B. [D-M2(FS, BS, AU, W)]

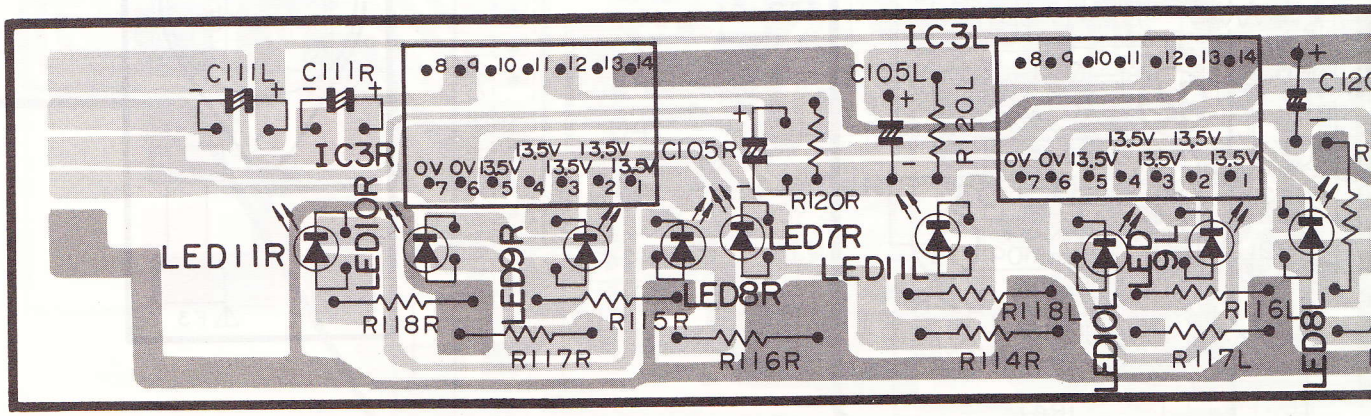

LEVEL INDICATOR P.C.B.

: Ground : Signal, + B

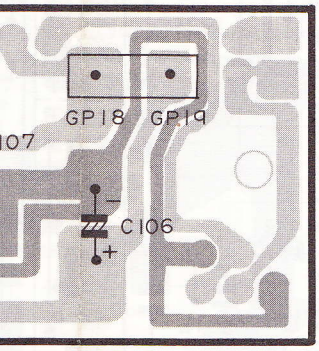

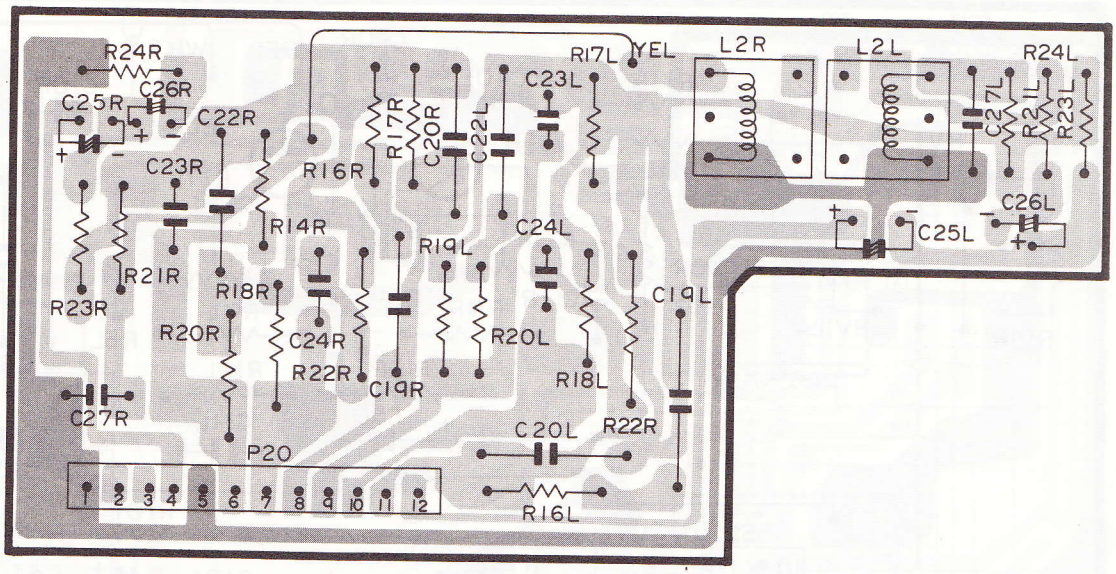

EQUALIZER P.C.B.

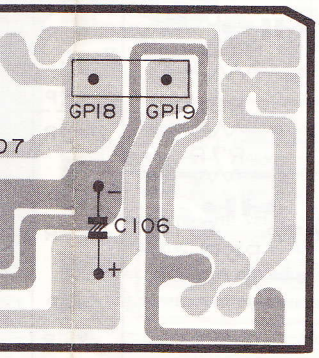

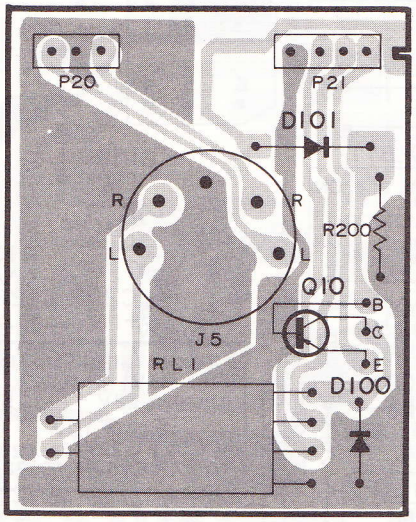

DIN JACK P.C.B. [D-M1(W)/D-M2(FS, BS, AU, W)]

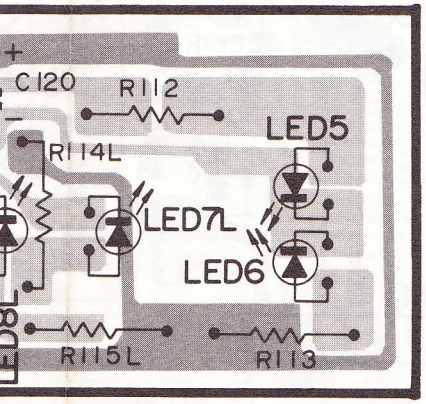

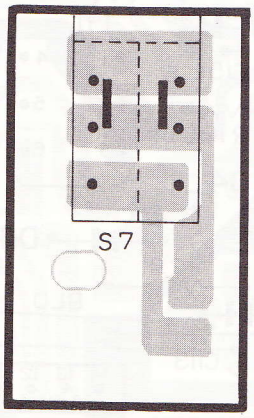

POWER SWITCH P.C.B.
[D-M1(U, C, W)/D-M2(W)]

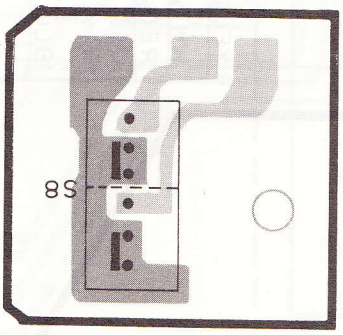

REC MUTE SWITCH P.C.B.

FOR CASSETTE CHASSIS ASSEMBLY (B)

SYMBOL-NO	P-NO	DESCRIPTION
1	7319462	EJECT LEVER
2	5559234	COUNTER
3	6753282	COUNTER BUTTON
4	6354901	COUNTER BELT
5	6631794	LED PANEL
6	0678312	DT SCREW – 2.6MMD × 12MM (BLACK)
7	6632592	CASSETTE METAL
8	7316272	RECORD LEVER ASSEMBLY
9	7321091	ADJUST PLATE
10	6755011	POWER KNOB LEVER
⚠ 11	6711352	BUSHING [D-M2 (BS)]
⚠	6794071	BUSHING [D-M2 (W)]
⚠	0043793	BUSHING [D-M2 (FS)]
⚠	6711351	BUSHING [D-M2 (AU)]
12	8699412	BIND TAPPING SCREW – 3MMD × 12MM (BLACK)
13	7780915	BIND TAPPING SCREW – 2MMD × 5MM
14	6714213	NYLON RIVET
15	5659101	BACK COVER [D-M1 (U, C, W)
16	0671310	DT SCREW – 2.6MMD × 10MM
17	0671306	DT SCREW – 2.6MMD × 6MM [D-M2 (BS)]

MISCELLANEOUS

SYMBOL-NO	P-NO	DESCRIPTION
18	6223663	FRONT PANEL ASSEMBLY [D-M1 (U, C)]
	6223664	FRONT PANEL ASSEMBLY [D-M1 (W)]
	6223665	FRONT PANEL ASSEMBLY [D-M2 (FS, BS, AU, W)]
19	6052072	PUSH BUTTON (REC MUTE)
20	6532752	LEAF SPRING
21	6257871	EJECT BUTTON
22	6303784	SPRING
23	6753111	BUTTON PIN
24	6052042	PUSH BUTTON (POWER)
25	6053141	PUSH BUTTON (DOLBY NR, INPUT)
26	6287712	KNOB ASSEMBLY } (REC VOLUME)
27	6287663	KNOB ASSEMBLY – 19MMD } (REC VOLUME)
28	6287622	SWITCH KNOB (TAPE SELECTOR)
29	6092185	CASSETTE DOOR ASSEMBLY
30	6259761	PUSH BUTTON (BEAT)
31	6182125	HEAD COVER
32	6041247	UPPER COVER [D-M1 (U, C, W)]
	6041248	UPPER COVER [D-M2 (FS, BS, AU, W)]
33	8699412	BIND TAPPING SCREW – 3MMD × 12MM (BLACK)
34	7740372	RUBBER LEG
35	8698412	BT BIND SCREW – 3MMD × 12MM
36	8698410	BT BIND SCREW – 3MMD × 10MM

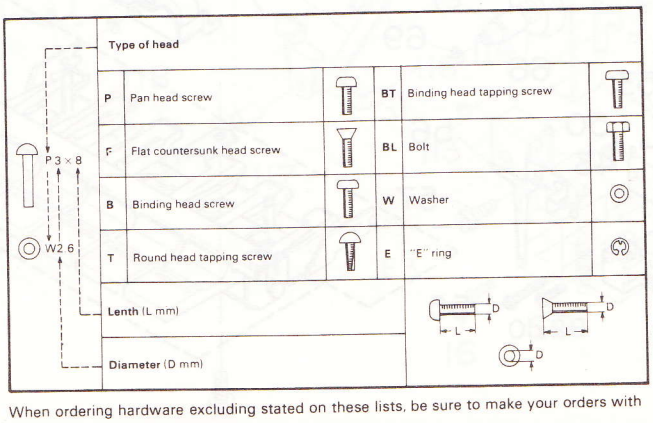

When ordering hardware excluding stated on these lists, be sure to make your orders with type and size.

EXPLODED VIEW

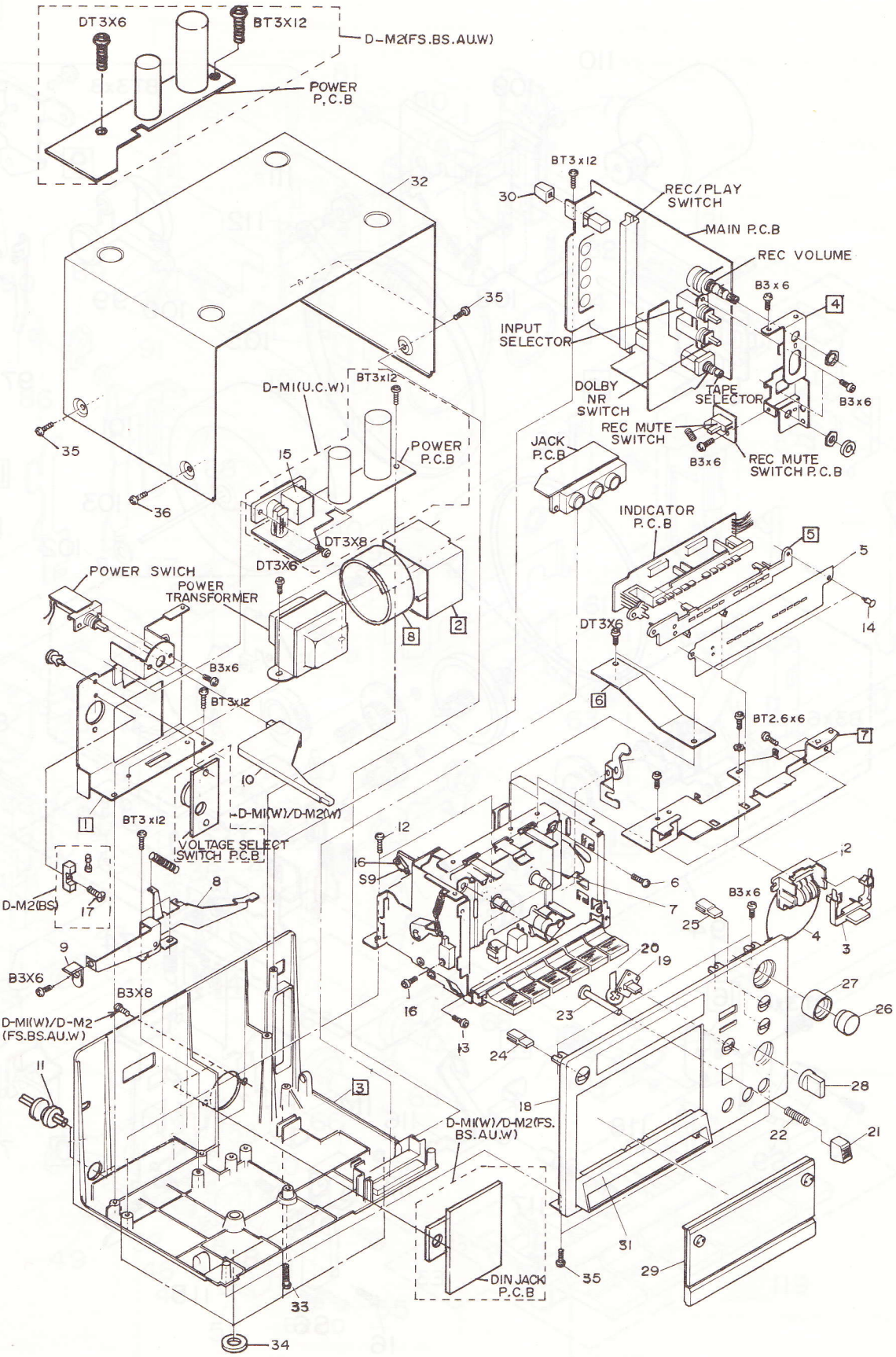

Note: Components marked with [number] in this drawing are not specified as replacement parts.

EXPLODED VIEW

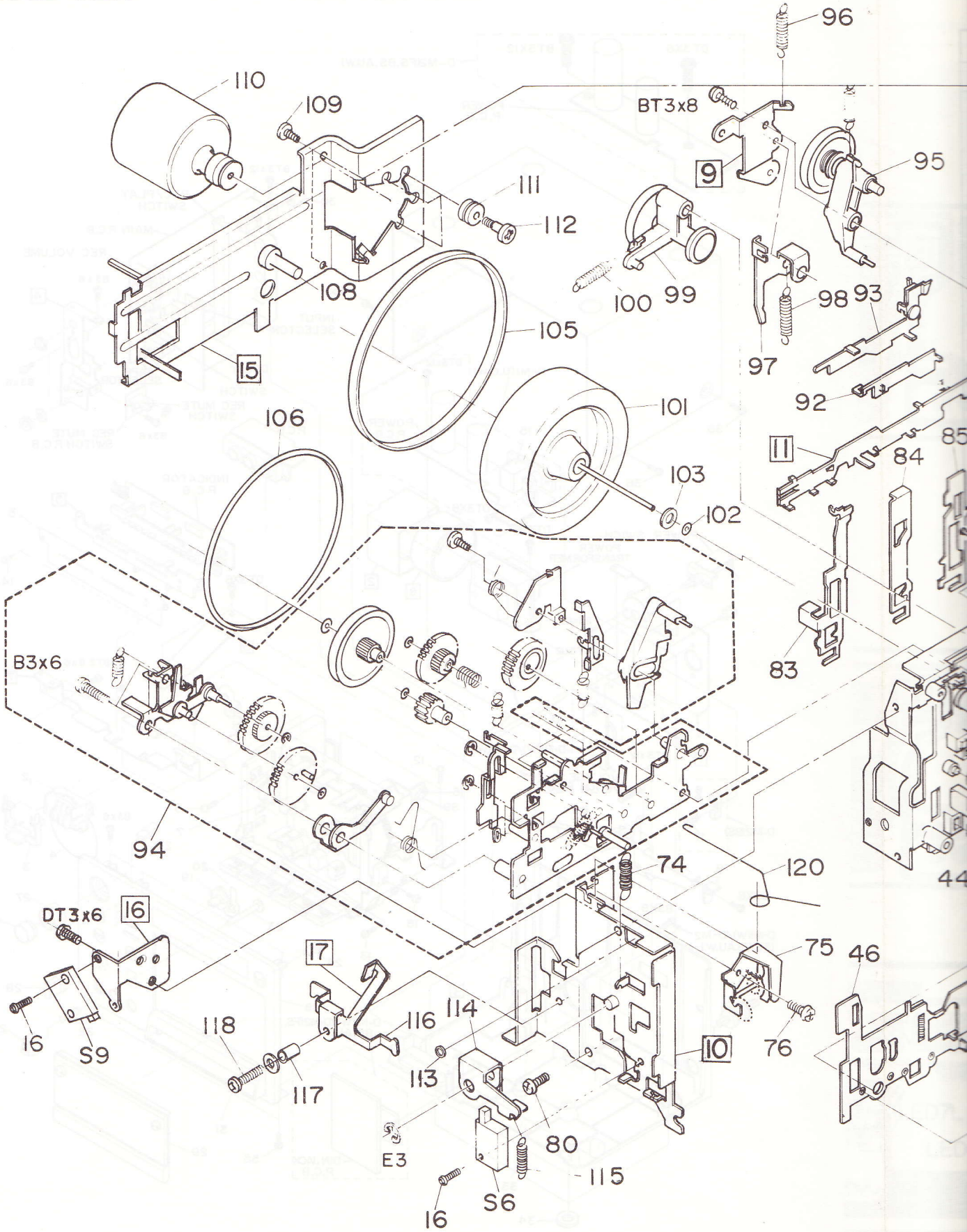

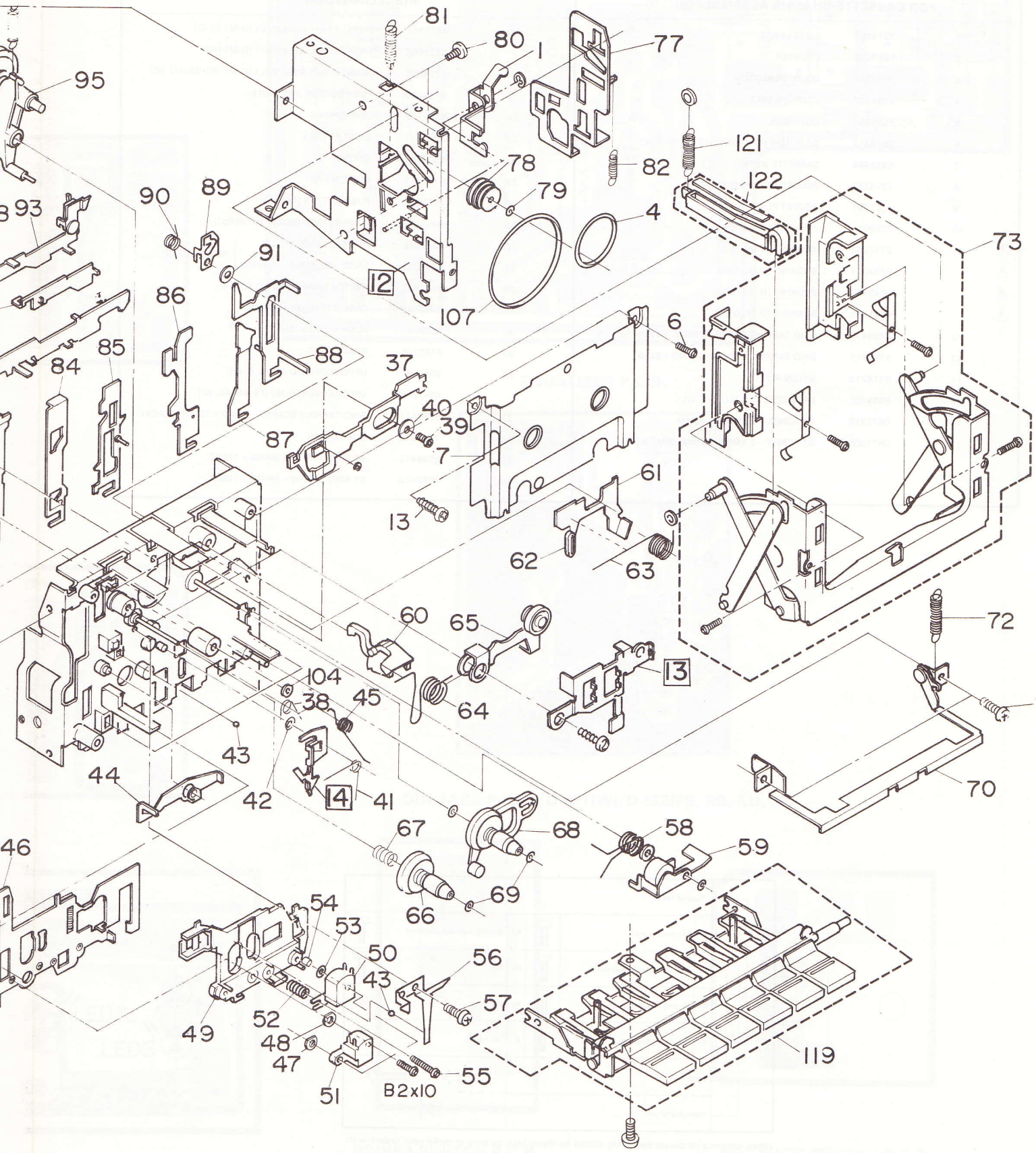
81
80
1
77
95
121
78
82
122
90
89
79
93
4
73
91
12
86
107
6
85
88
84
37
40
39
87
7
61
13
62
63
60
65
72
104
38
45
13
64
71
43
44
42
14
41
70
67
68
58
46
59
69
66
54
53
50
56
43
57
52
49
48
47
119
55
51
B2x10

BLOCK DIAGRAM

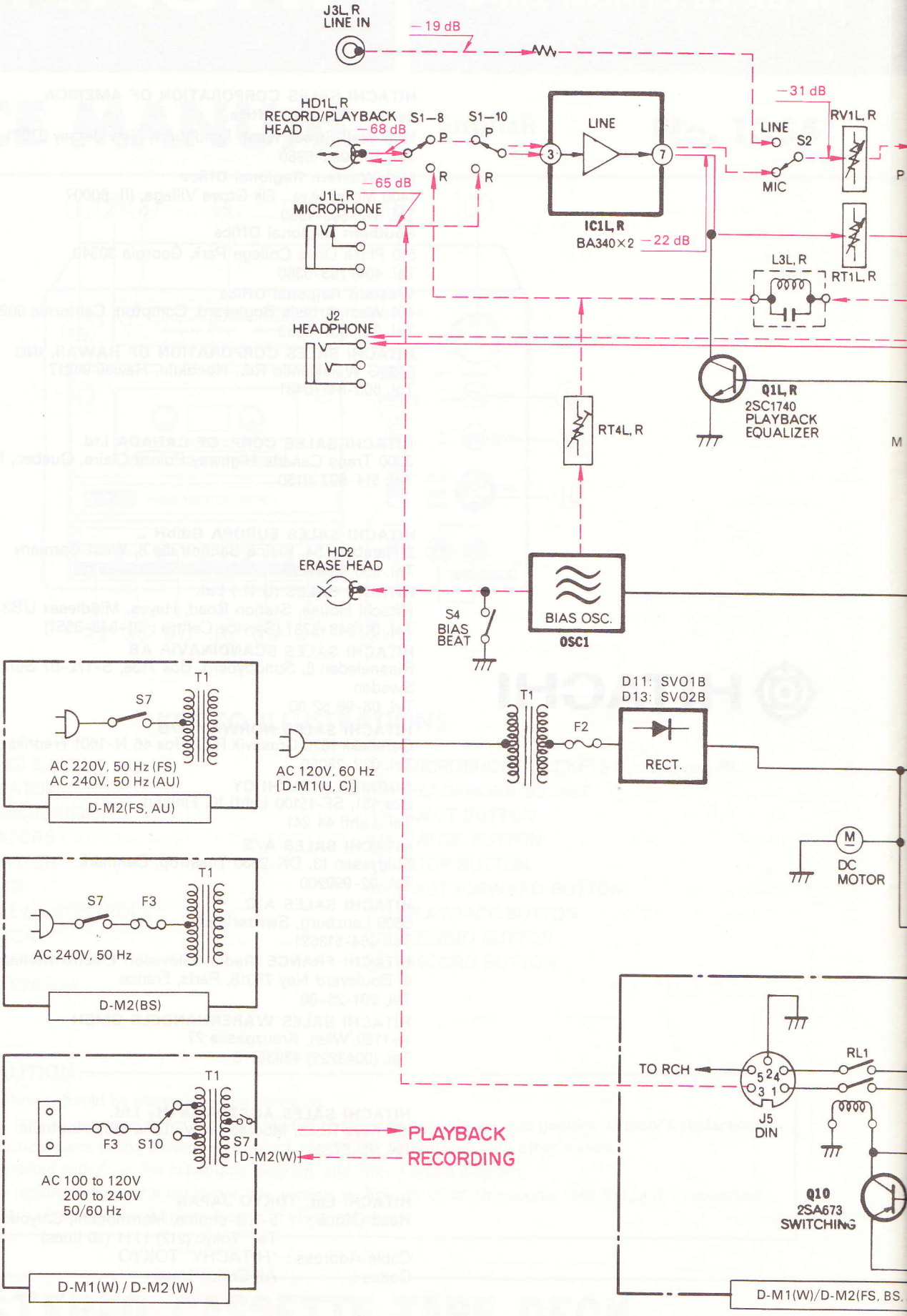

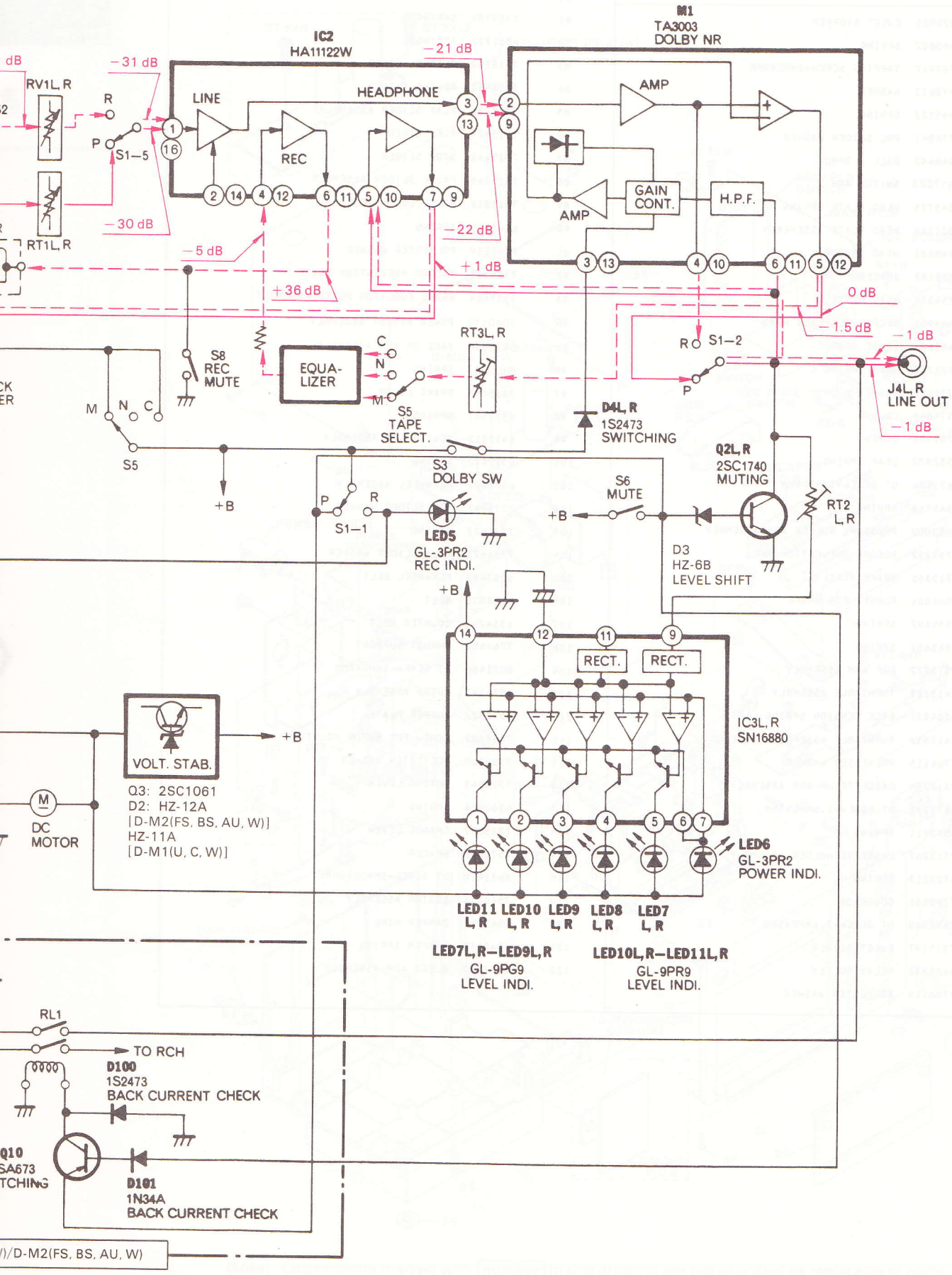
IC2
HA11122W
M1
TA3003
DOLBY NR
LINE
HEADPHONE
REC
AMP
GAIN CONT.
H.P.F.
RV1L, R
RT1L, R
S1–5
S8
REC
MUTE
EQUA-
LIZER
RT3L, R
S5
TAPE
SELECT.
D4L, R
1S2473
SWITCHING
S1–2
J4L, R
LINE OUT
Q2L, R
2SC1740
MUTING
RT2
L, R
S3
DOLBY SW
S6
MUTE
S1–1
LED5
GL-3PR2
REC INDI.
D3
HZ-6B
LEVEL SHIFT
RECT.
IC3L, R
SN16880
VOLT. STAB.
Q3: 2SC1061
D2: HZ-12A
[D-M2(FS, BS, AU, W)]
HZ-11A
[D-M1(U, C, W)]
DC
MOTOR
LED6
GL-3PR2
POWER INDI.
LED11 L, R
LED10 L, R
LED9 L, R
LED8 L, R
LED7 L, R
LED7L, R–LED9L, R
GL-9PG9
LEVEL INDI.
LED10L, R–LED11L, R
GL-9PR9
LEVEL INDI.
RL1
TO RCH
D100
1S2473
BACK CURRENT CHECK
Q10
SA673
TCHING
D101
1N34A
BACK CURRENT CHECK
/)/D-M2(FS, BS, AU, W)

HITACHI SALES CORPORATION OF AMERICA
Eastern Regional Office
1200 Wall Street West, Lyndhurst, New Jersey 07071
Tel. 201-935-8980
Mid-Western Regional Office
1400 Morse Ave., Elk Grove Village, Ill. 60007
Tel. 312-593-1550
Southern Regional Office
510 Plaza Drive College Park, Georgia 30349
Tel. 404-763-0360
Western Regional Office
401 West Artesia Boulevard, Compton, California 90220
Tel. 213-537-8383
HITACHI SALES CORPORATION OF HAWAII, INC
743-G Waiakamilo Rd., Honolulu, Hawaii 96817
Tel. 808-841-0431

HITACHI SALES CORP. OF CANADA Ltd.
3300 Trans Canada Highway Pointe Claire, Quebec, H9R1B1, Canada
Tel. 514-697-9150

HITACHI SALES EUROPA GmbH
2 Hamburg 54, Kleine Bahnstraße 8, West Germany
Tel. 850 60 71-75
HITACHI SALES (U.K.) Ltd.
Hitachi House, Station Road, Hayes, Middlesex UB3 4DR, England
Tel. 01-848-8787 (Service Centre : 01-848-3551)
HITACHI SALES SCANDINAVIA AB
Rissneleden 8, Sundbyberg, Box 7138, S-172-07 Sundbyberg 7, Sweden
Tel. 08-98 52 80
HITACHI SALES NORWAY A/S
Oerebekk 1620 Gressvik P.O. Box 46 N-1601 Fredrikstad, Norway
Tel. 032-28050
SUOMEN HITACHI OY
Box 151, SF-15100 Lahti 10, Finland
Tel. Lahti 44 241
HITACHI SALES A/S
Kuldyssen 13, DK-2630 Taastrup, Denmark
Tel. 02-999200
HITACHI SALES A.G.
5600 Lenzburg, Switzerland
Tel. 064-513621
HITACHI-FRANCE (Radio-Télévision Electro-Ménager) S.A.
9, Boulevard Ney 75018, Paris, France
Tel. 201-25-00
HITACHI SALES WARENHANDELS GMBH
A-1180/Wien, Kreuzgasse 27
Tel. (0043222) 439367/8

HITACHI SALES AUSTRALIA Pty Ltd.
153 Keys Road, Moorabbin, Victoria 3189 Australia
Tel. 95-8722

HITACHI Ltd. TOKYO JAPAN
Head Office : 5-1, 1-chome, Marunouchi, Chiyoda-ku, Tokyo
Tel. Tokyo (212) 1111 (80 lines)
Cable Address : "HITACHY" TOKYO
Codes : All Codes Used

Printed in Japan (H.M2)